March 20, 1962 W. G. De GRAY 3,025,536

FOLDING PORTABLE BABY CRIB

Filed Jan. 6, 1959 3 Sheets-Sheet 1

Fig. 1

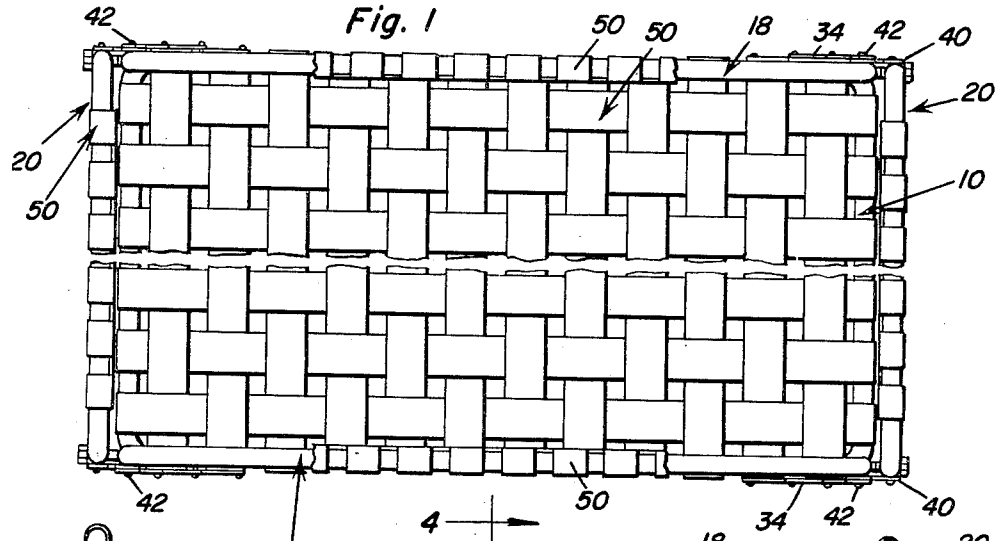

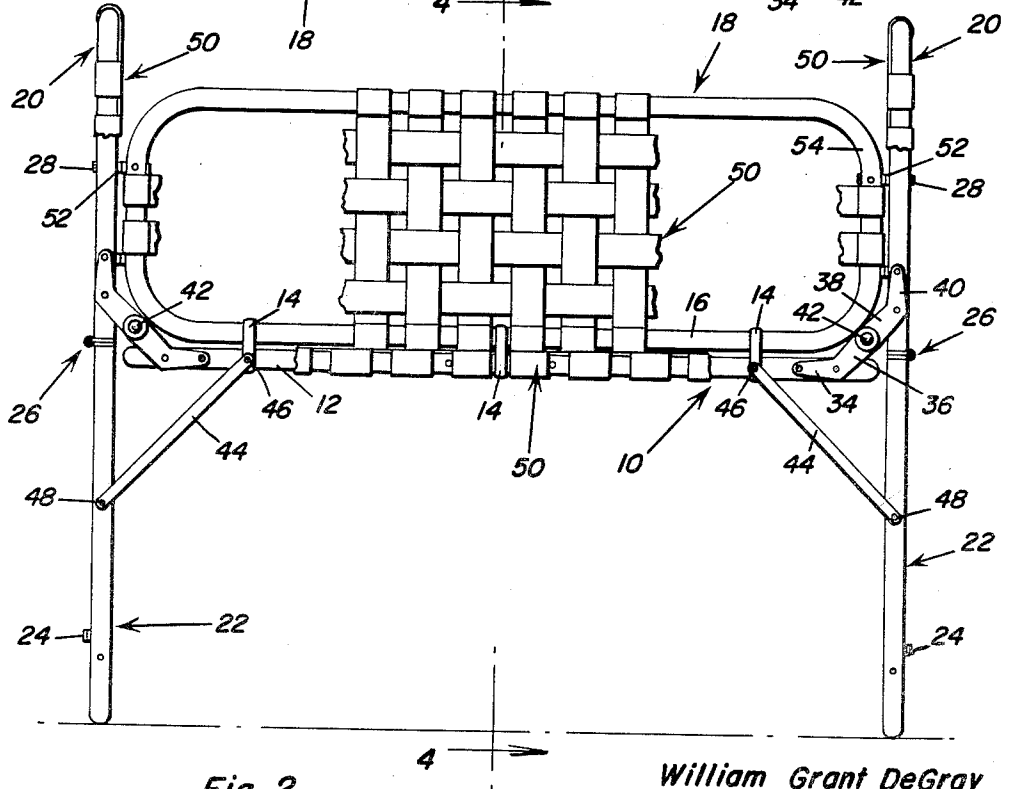

Fig. 2

William Grant DeGray

INVENTOR.

BY Clarence A. O'Brien and Harvey B. Jacobson

Attorneys

March 20, 1962 W. G. De GRAY 3,025,536

FOLDING PORTABLE BABY CRIB

Filed Jan. 6, 1959 3 Sheets-Sheet 2

Fig. 3

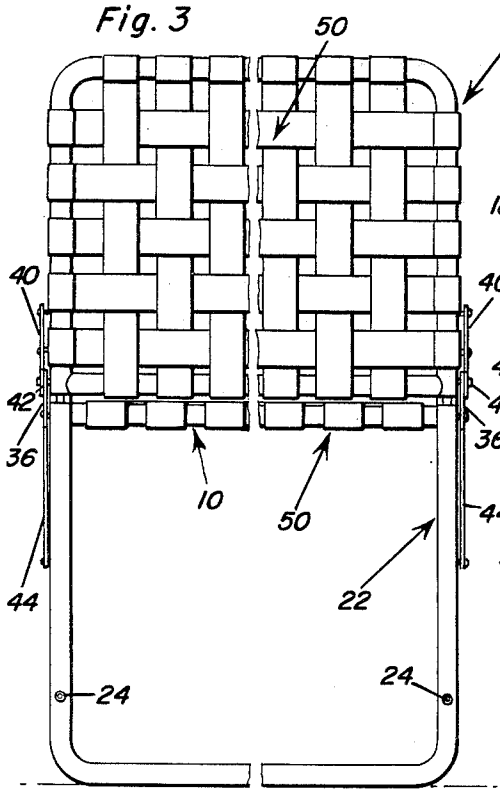

Fig. 4

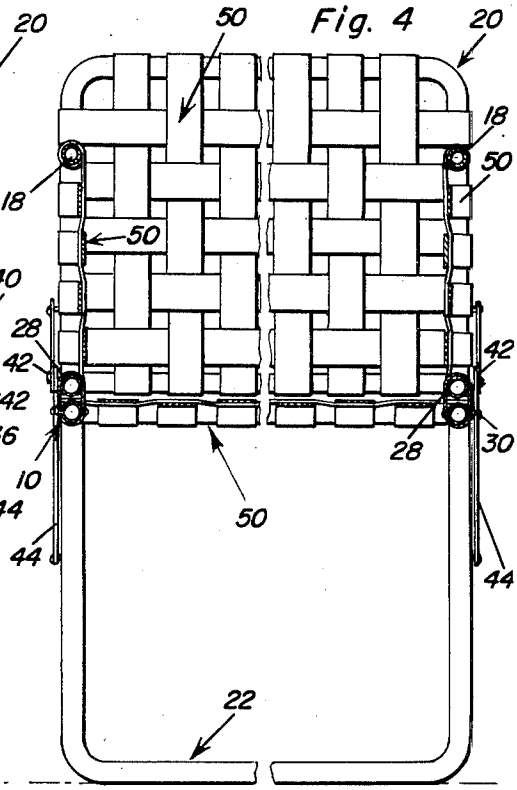

Fig. 5

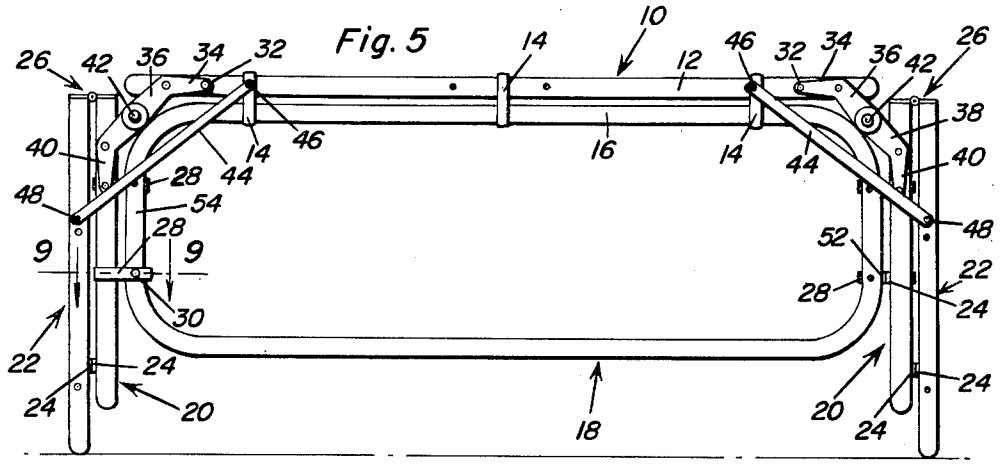

Fig. 9

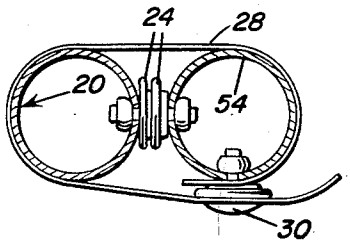

William Grant DeGray

INVENTOR.

BY Clarence A. O'Brien and Harvey B. Jacobson

Attorneys

March 20, 1962 W. G. De GRAY 3,025,536

FOLDING PORTABLE BABY CRIB

Filed Jan. 6, 1959 3 Sheets-Sheet 3

Fig. 6

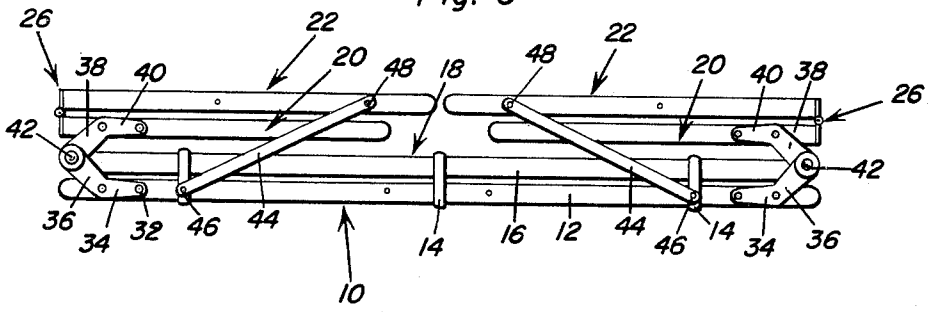

Fig. 7

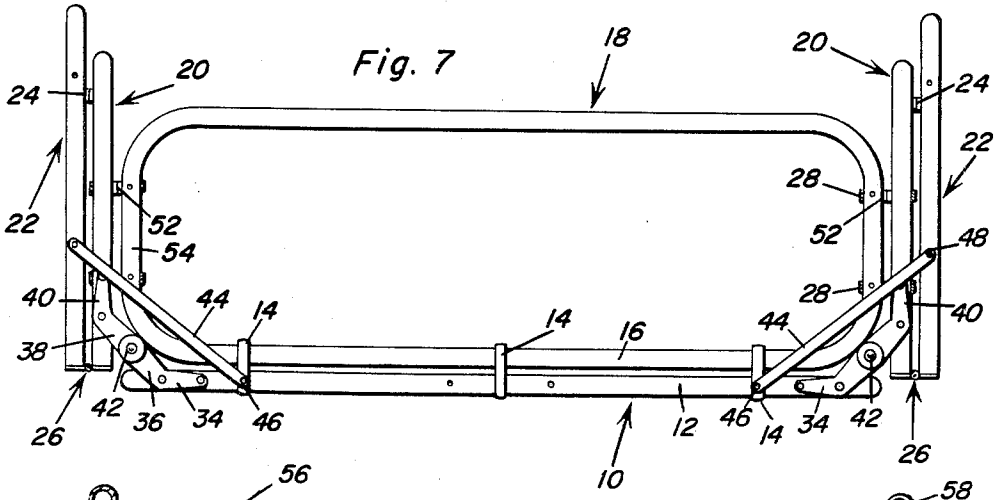

Fig. 8

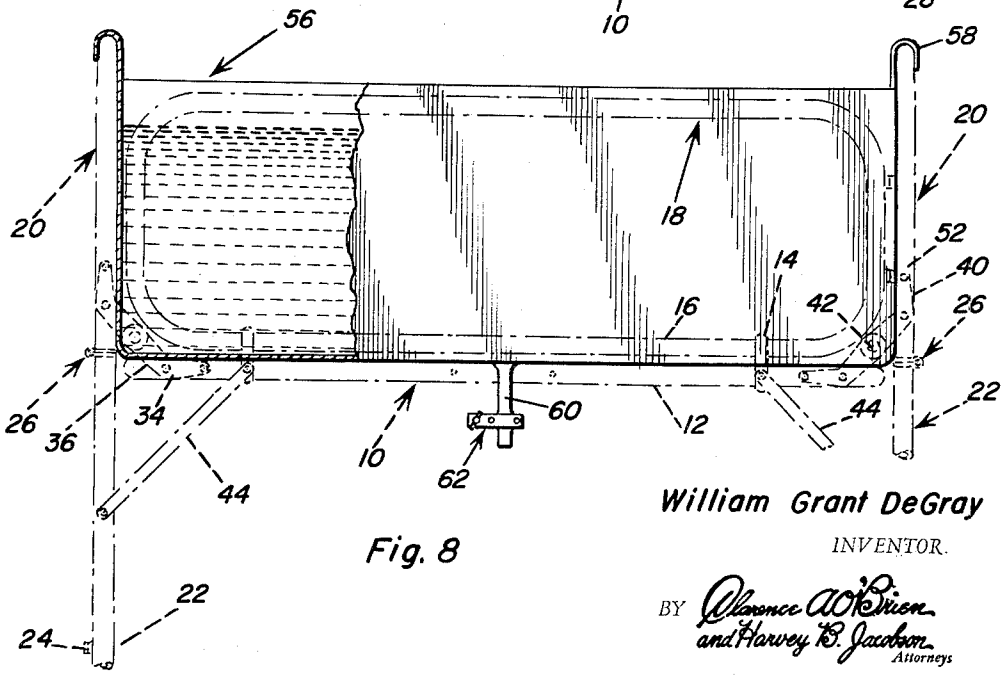

William Grant DeGray

INVENTOR.

BY Clarence A. O'Brien and Harvey B. Jacobson

Attorneys

United States Patent Office

3,025,536

Patented Mar. 20, 1962

3,025,536
FOLDING PORTABLE BABY CRIB

William Grant De Gray, 900 25th St.,
West Palm Beach, Fla.

Filed Jan. 6, 1959, Ser. No. 785,287
4 Claims. (Cl. 5—99)

This invention relates, broadly construed, to an improved portable folding frame structure which is convertible and therefore such that it is capable of practical use as a baby crib, a multipurpose table-like stand, and support means for a readily attachable and detachable plastic or equivalent tub capable of use for giving a baby a bath or, for that matter, to wash things in when no better facilities are conveniently at hand.

More specifically, the concept has to do with a plurality of novelly constructed and designed frames or units which are such in construction and are so interrelated and mechanically connected that the over-all framework or structure permits the frames to be arranged and rearranged to perform the functions comprehended, in a general manner, in the preceding general statement of the invention.

In carrying out a preferred embodiment of the invention there is provided an elongated primary frame which may, if desired, serve as a horizontal support for a mattress or the like, a pair of elongated side frames having lengthwise members pivotally joined with the respective lengthwise members of said primary frame and auxiliary thereto and adapted to assume upstanding spaced parallel positions or, alternatively, adapted to fold inwardly and then down to assume a folded position atop said primary frame, a pair of transverse end frames, means hingedly joining said end frames to the respective transverse end members of the primary frame, and quick-separable fastening means carried by and adapted to separably connect portions of the end frames to the cooperating frame members of said side frames.

Novelty is predicated not only on the association and cooperation of the plurality of frame units when used in the several ways revealed. That is to say, a point of novelty of equal significance is the fact that the frame units and their complemental accessories and parts make it satisfactorily possible for the user to collapse the frame units in a systematic and orderly manner to provide a compact and convenient "package" which is susceptible of being readily opened up for use, easily handled and carried and expeditiously and conveniently stored when not in use.

Then, too, the over-all construction has been planned and layed out in a manner that the parts open or fold in a substantially self-evident manner and, since the principal parts are constructed of lightweight aluminum or equivalent tubing, almost anyone can learn to set up the structure or collapse it and put it away without requiring unusual strength to do so. Further, the fact that the various parts are all linked together this "togetherness" factor obviates the likelihood of losing any parts. Not only this, no special tools are required to complicate procedural steps or confuse those not adept at handling tools.

In addition to the above it is to be mentioned, as will be hereinafter pointed out, that the construction permits use thereof in a half-open position. Therefore, it becomes a legless crib or bed which is capable of being effectually placed in an automobile on a seat or station-wagon on a floor or even, when in the home, on any selected supporting surface.

What is more, the primary frame units are provided with suitable walls. By preference each wall is of a ventilated woven plastic strip-type possessing both strength and resiliency whereby the use of a mattress, or even a pad, is not necessary.

Other objects, features and advantages will become more readily apparent from the following description and the accompanying drawings.

In the drawings wherein like numerals are employed to designate like parts throughout the views:

FIG. 1 is a top plan view showing the structure erected or set up to serve as a baby crib.

FIG. 2 is a view in side elevation with parts omitted to more clearly illustrate the structural parts.

FIG. 3 is an end view of the crib seen in FIGS. 1 and 2.

FIG. 4 is a section on the vertical line 4—4 of FIG. 2, looking in the direction of the arrows.

FIG. 5 is an elevational view, with the wall means or equivalent covering material omitted and showing how the structure may be employed in a so-called inverted position whereupon the main frame at the top serves as a table for such many uses as a table is usable.

FIG. 6 is a view in elevation showing how the parts look when they are collapsed or folded into compact position for carrying or storing as the case may be.

FIG. 7 is a view similar to FIG. 5 but with the parts upright and which serves as a legless crib capable of being placed on an automobile seat or other support surface.

FIG. 8 is a view wherein the frame structure is shown in phantom lines and which illustrates how it may be aptly employed as support means for a readily attachable and detachable plastic, rubber or an equivalent water containing tub.

FIG. 9 is an exaggerated section on the horizontal line 9—9 of FIG. 5, looking in the direction of the arrows.

The main frame or primary frame is denoted by the numeral **10** and is of general rectangular form and for convenience of further reference the longitudinal side members are denoted at **12**. These side members **12** are provided with loop-like or equivalent strap members **14** which serve to hingedly mount the cooperating longitudinal members **16** of the side frames or units **18**. These frames **18** being also rectangular are commensurate in length with the length of the main frame and they are half the width of the main frame so that it is possible to fold them together in coplanar out-of-the-way position atop the main frame **10** in the collapsed manner or position seen in FIG. 6. Although the longitudinal side frames **18** are one-piece and rectangular each transverse end frame is comprised of two sections. Each section is formed from tubing, as are the other frames, but each section is U-shaped in form. The shorter U-shaped section, sometimes called the inner section when folded, is denoted by the numeral **20** while the companion outer U-shaped section is denoted at **22**. As shown in most of the views, for example FIGS. 5 and 7 in particular, these sections **20** and **22** can be moved into opposed spaced parallel relationship and held in this position by way of cooperating alignable snap-fasteners or equivalent separable fasteners as denoted at **24**. It will be further noted that the alignable end portions of the limbs of the sections **20** and **22** are connected by a simple butt hinge **26** which permits the sections to fold together (FIGS. 5, 6 and 7), or to be swung into coplanar aligned relationship (FIGS. 2, 3 and 8) depending on the manner in which they are to be used in any given time. It might be mentioned that FIG. 9 is employed here to show any suitable type snap-fasteners which shall, of course, be sufficiently sturdy to achieve the desired result. In addition, an embracing strap **28** may be employed and this may surround the tubular legs or limbs and be secured by a snap-fastener as at **30** to more satisfactorily maintain the parts together.

The sectional end frames are "hingedly bracketed" to the respective transverse ends of the main or base frame **10**. The bracketing means to accomplish this is the same

at each of the four corners, where the brackets are necessary. Sometimes these "brackets" are referred to in the trade as bell-crank-type links. In any event both links are the same in construction and one end of one link or bracket is secured at 32, that is the end 34 and the oblique angled end portion 36 projects above the frame 10 (FIG. 2) to cooperate with the correspondingly angled end portion 38 of the other bracket or link 40 which is fastened to one of the limbs of one of the U-shaped sections, for example the section 20, in the manner shown. The cooperating end portions 36 and 38 are hinged or pivoted together at 42. By using these forms of brackets the end frame sections 20 and 22 may be snapped together and retained in folded relationship. Take for example in the collapsed arrangement in FIG. 6 it will be evident that the side frames 18 are first folded inwardly atop the main frame 10 and then the companion U-shaped sections 20 and 22 of the respective end frames, after having been snapped together in folded relationship may, as a unit, be swung inwardly to overlie the side frames 18 so that the side frames are virtually "sandwiched" in between the main frame and the folded in end frames. It is desirable, as will be evident, to employ bodily attachable braces or stays such as are individually denoted by the numerals 44. These stays are of requisite rigidity and length to perform the purposes for which they are intended. They are provided with snap-fasteners so that it is possible to snap one end 46 in place on the main frame and the other end in place on a snap-fastener provided therefor on one of the legs or limbs of the outer frame section 22 as denoted at 48 (FIG. 6). This particular figure is being used as a basis of reference for, obviously, the utmost simplicity and portability of the over-all "crib" is surely evident from this one figure alone.

In practice it is desirable to provide the frames with covering means or walls. For example each wall is denoted by the numeral 50 and it is preferably of an openwork or ventilated construction. Plastic straps are interwoven and connected to the frame part in a now generally well known manner. There are many tubular aluminum chairs or the like currently on the market wherein this type of material is employed because of the pliant and washable as well as the resilient properties thereof. So far as the novelty in the instant case is concerned the construction of the "walls" is not material. By preference, the walls are employed in the manner illustrated in the drawing so that one need not have bed springs or mattresses or special bulky pads to contend with. It is repeated that FIG. 6 shows the construction and arrangement of all essential components and the relationships thereof when the parts are collapsed or folded for transportation or storage. FIGS. 1 to 4, inclusive, show the relationship of the parts, particularly the frames 10, 18, 20 and 22, when they are erected to provide a leg supported or elevated baby crib. It will be noticed in this connection that additional snap-fasteners generally denoted at 52 are provided so that the limbs or arms of the inner U-shaped sections of the end frames may be separably connected with the transverse end members 54 of the side frames in an obvious manner. When the frame sections 20 and 22 are in the position shown for example in FIG. 4 the stays 44 (already mentioned) are simply rearranged and snapped in position to make sure that the frames stay put.

As seen in FIG. 7 a so-called legless crib is provided. Here the previously existing leg frames in FIG. 2 are hinged or swung up and snapped in an out-of-the-way position and the stays are rearranged to provide a crib which is capable of being placed on an automobile seat or on the floor in a stationwagon or in fact on any suitable supporting surface where this style or form of legless crib would be desirable. One can turn the structure of FIG. 7 upside down so that it then becomes the multipurpose stand or table depicted in FIG. 5. Here, assuming that the opening in the main frame 10 is suitably covered an appropriate table is provided. The expression "table" is used here broadly since the construction can also be used as a bench, seat or a stand on which to place miscellaneous articles and to perform certain duties on the baby.

Although it is of somewhat secondary importance it will be evident that the crib can also be used as support means for a readily attachable and detachable collapsible rubber or plastic tub 56 as shown in FIG. 8. The end walls of the tub may be provided with suitable hanger hooks 58 so that the tub can be installed in the crib and then filled with water to bathe the baby or to take care of miscellaneous chores where a washtub may be needed. The drain tube at the bottom of the tub is denoted at 60 and the numeral 62 designates a readily applicable and removable squeeze clamp (not detailed) which may be employed to open or close the drain tube or nipple 60 in an obvious manner.

The foregoing is considered as illustrative only of the principles of the invention. Further, since numerous modifications and changes will readily occur to those skilled in the art, it is not desired to limit the invention to the exact construction and operation shown and described, and accordingly, all suitable modifications and equivalents may be resorted to, falling within the scope of the invention as claimed.

What is claimed as new is as follows:

1. A folding crib comprising an elongated primary frame constituting a horizontal support, a pair of elongated side frames complemental to said primary frame and having lengthwise members pivotally joined with the respective lengthwise members of said primary frame, said side frames being adapted to fold inwardly and then down to assume a folded position atop said primary frame, a pair of transverse sectional end frames, means hingedly joining said end frames to cooperating transverse end members of the primary frame, and quick-separable fastening means carried by and adapted to separably connect sections of the end frames to cooperating frame members of said side frames, each end frame comprising a pair of companion sections having adjacent end portions of their limbs joined by hinges disposed substantially at the level of said primary frame, whereby said sections of each end frame may be folded together in juxtaposed relation, and snap-fasteners carried by cooperating limbs and serving to retain the sections in compact folded relationship.

2. A folding crib comprising an elongated rigid but light in weight main frame made of non-corrodible tubing and having longitudinal and transverse members, a pair of similarly contructed auxiliary side frames having longitudinal members commensurate in length with and hinged to said first mentioned longitudinal members and adapted when not in use to fold in and then down atop said main frame, a pair of end frames, each end frame comprising a pair of U-shaped companion sections, that is, an inner section the limbs of which are connectible to the adjacent end members of said side frames by way of alignable snap fasteners, an outer section the limbs of which join to the corresponding limbs of the inner section by way of similar alignable snap-fasteners, the limbs of the inner sections being hingedly bracketed to cooperating end portions of the respective longitudinal members of said main frame, other hinges joining the respective limbs of the inner and outer sections in end-to-end alignable as well as foldable relationship wherein the inner and outer sections are juxtaposed, and attachable and detachable selectively usable stays affording stabilizing connections between said main frame and the outer U-shaped sections of said end frames.

3. A folding crib comprising an elongated rigid but light in weight main frame made of non-corrodible tubing and having longitudinal and transverse members, a pair of similarly constructed auxiliary side frames having longitudinal members commensurate in length with and

hinged to said first mentioned longitudinal members and adapted when not in use to fold in and then down atop said main frame, a pair of U-shaped end frames the limbs of which are hingedly bracketed to the respective end portions of the longitudinal members of said main frame, said side frames being erected to upstanding positions vertical to the plane of said main frame and the end members of said side frames being separably secured to the respective limbs of said U-shaped end frames, whereby the main frame, side frames, and complemental end frames provide a legless crib capable of being placed atop a seat in an automobile, and also, when the overall structure is bodily inverted, the end frames then function as supporting legs and the main frame, when suitably covered, becomes a table.

4. A collapsible crib in folded ready-to-store form comprising a flat rectangular main frame, a pair of duplicate smaller rectangular side frames folded in coplanar positions atop and within the confines of the main frame, means pivotally connecting the adjacent cooperating longitudinal members of said main and side frames with each other, a pair of end frames complemental to the main and side frames, each end frame comprising a pair of U-shaped sections the cooperating ends of the limbs of which are joined by the butt-hinges, the U-shaped

sections of the respective end frames being folded in superposed relation and also above the side frames so that the side frames are interposed between the main frame and the bottom-most U-shaped frame sections, the limbs of the latter frame sections having brackets fixed thereon, the end portions of the longitudinal frame members of the main frame having mated brackets fixed thereon, the respective pairs of brackets having oblique angled end portions toed into the space between the main frame and end frames and said end portions being hinged and thus linked together to allow the end frames to swing freely from a folded state to a ready-to-use position, and readily applicable and removable stays further connecting the topmost U-shaped frame sections to said main frame.

References Cited in the file of this patent

UNITED STATES PATENTS

1,179,697	Chappell	Apr. 18, 1916
1,220,015	Sisbower et al.	Mar. 20, 1917
1,278,568	Basile	Sept. 10, 1918
1,724,852	Scott	Aug. 13, 1929
2,601,111	Foster	June 17, 1952
2,772,423	Linden	Dec. 4, 1956
2,853,718	Lim	Sept. 30, 1958