United States Patent

[11] 3,624,590

[72] Inventor **Lee R. Bolduc**
Minneapolis, Minn.

[21] Appl. No. **762,582**
[22] Filed **Sept. 25, 1968**
[45] Patented **Nov. 30, 1971**

[73] Assignee **Medical Plastics, Inc.**
Minneapolis, Minn.

[54] CLAMP FOR DISPOSABLE GROUND PLATE ELECTRODE

9 Claims, 10 Drawing Figs.

[52] **U.S. Cl.** ..... **339/75 R,** 339/174, 339/200 P, 339/255 P
[51] **Int. Cl.** **H01r 13/54**
[50] **Field of Search** ..... 128/303.18, 303.17, 303.14, 303.13, 404, 416, 418; 340/256; 339/14, 149, 150, 151, 174, 176, 200, 206, 207, 208, 220, 255 P, 74, 261, 266, 58, 13, 75 R, 75 M

[56] **References Cited**

UNITED STATES PATENTS

1,492,201	4/1924	Carle et al.	24/252
3,031,642	4/1962	Gartner	339/261
2,103,891	12/1937	Brown	339/255 X
2,465,722	3/1949	Hamilton	339/150

Primary Examiner—Marvin A. Champion
Assistant Examiner—Lawrence J. Staab
Attorney—Burd, Braddock & Bartz

ABSTRACT: An electrosurgical unit using high-frequency currents having an active electrode and a patient indifferent ground plate. The plate is a disposable flexible ground plate electrode having an electrically conductive skin releasably attached to a clamp connected to a line leading to a power supply. A test circuit tests the electrical connection between the clamp and the skin of the plate electrode. The releasable connector has a flat contact plate in surface engagement with the skin of the ground plate electrode. One form of the connector has a pair of connected plate contacts attached to and pivotally mounted on flat electrically insulative covers.

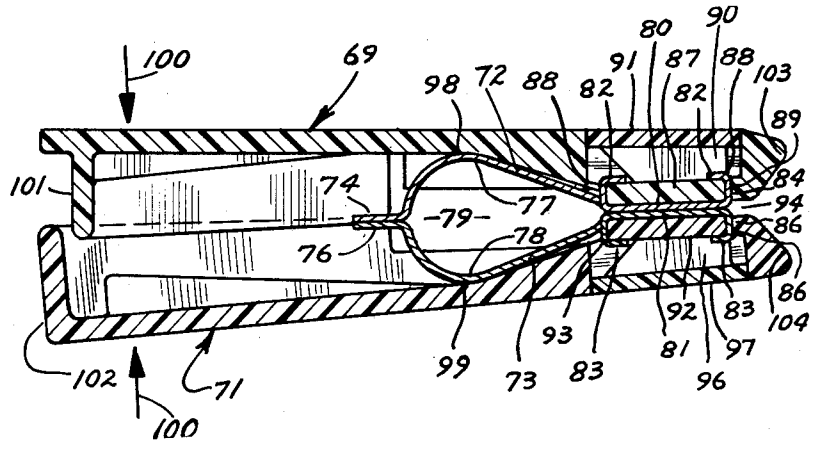

FIG. 1

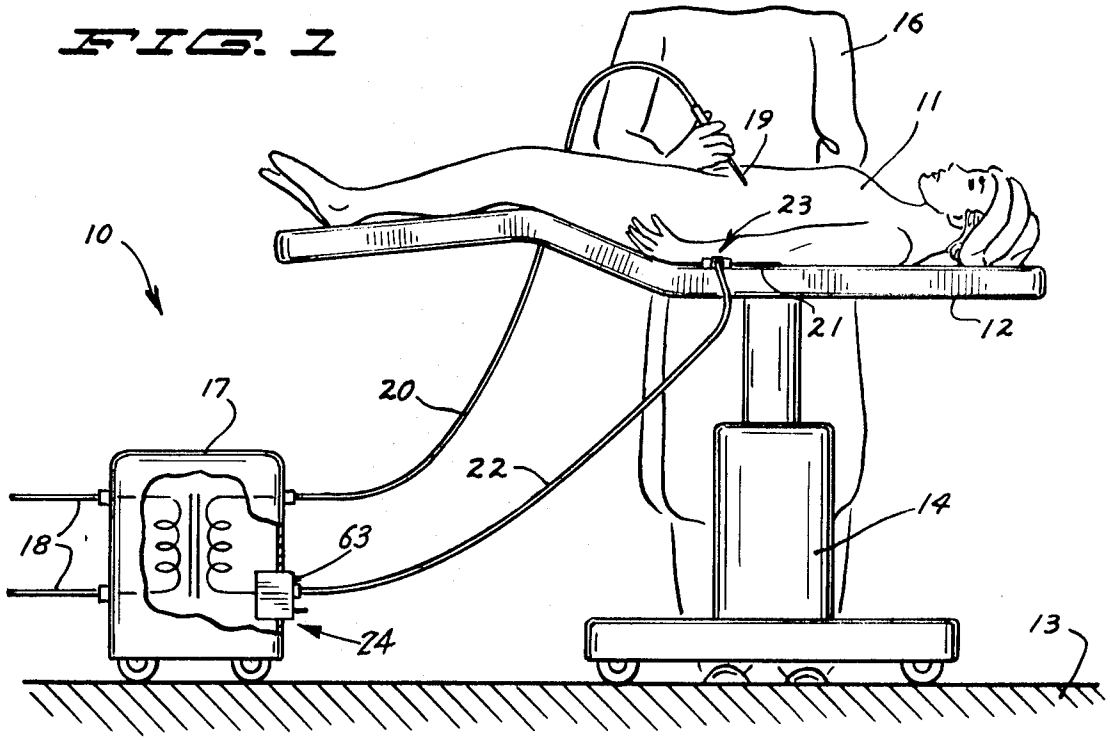

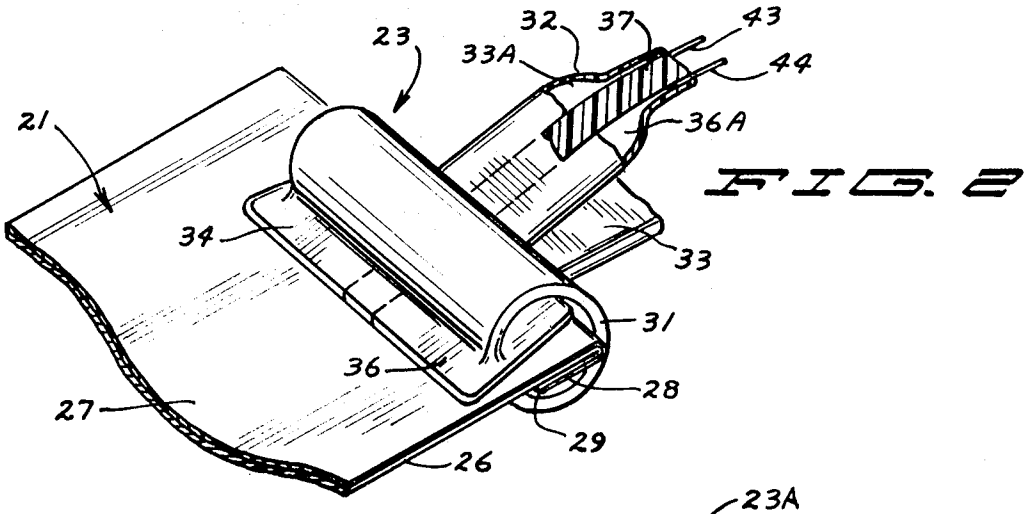

FIG. 2

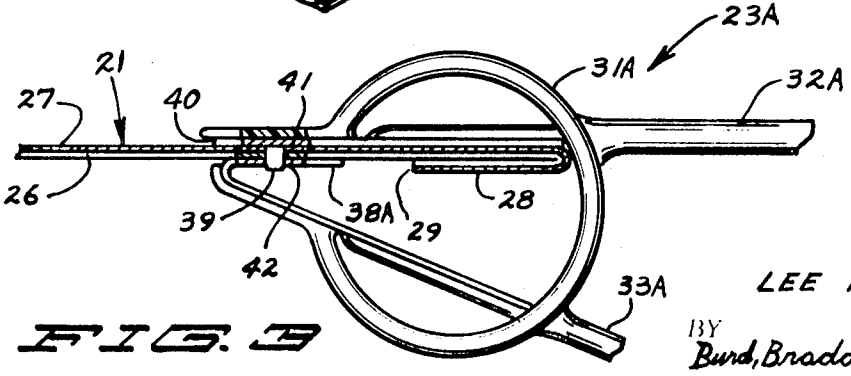

FIG. 3

INVENTOR.
LEE R. BOLDUC
BY
Burd, Braddock & Bartz
ATTORNEYS

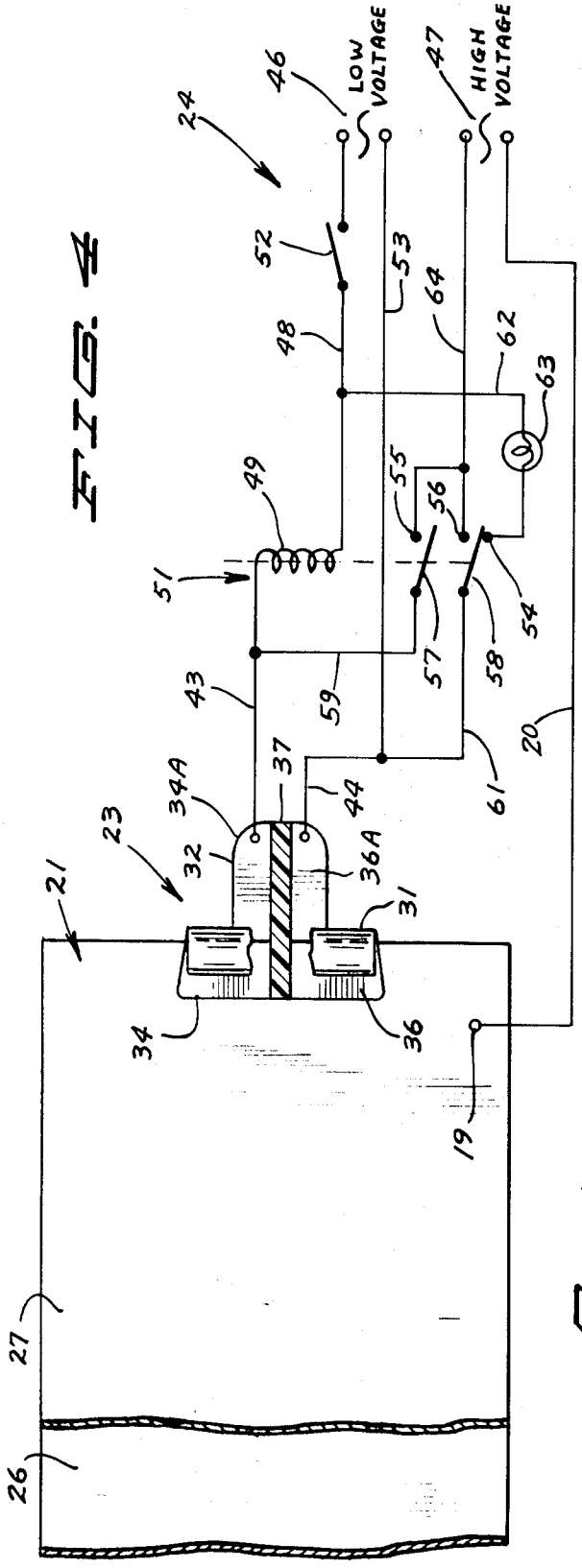

FIG. 4

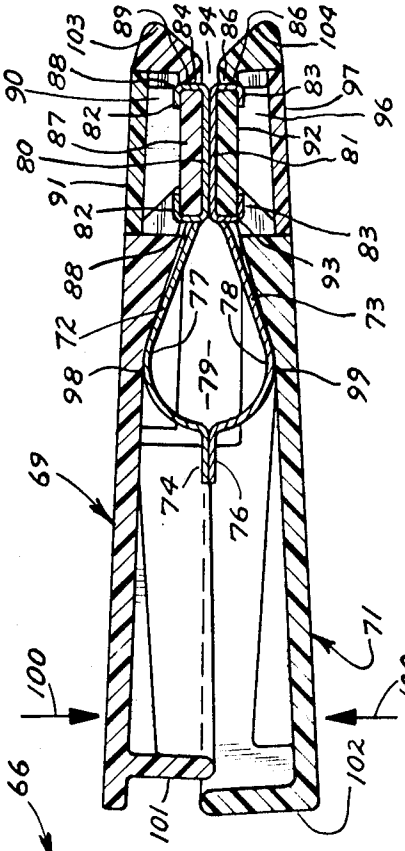

FIG. 6

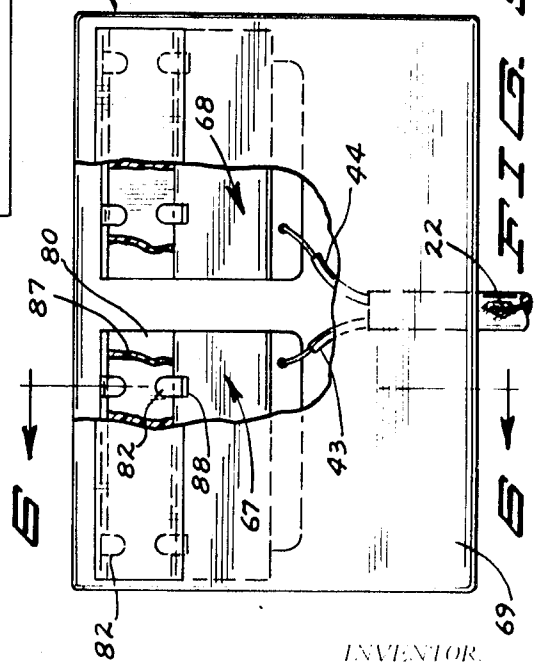

FIG. 5

INVENTOR.
LEE R. BOLDUC

BY
Burd, Braddock & Bartz

ATTORNEYS

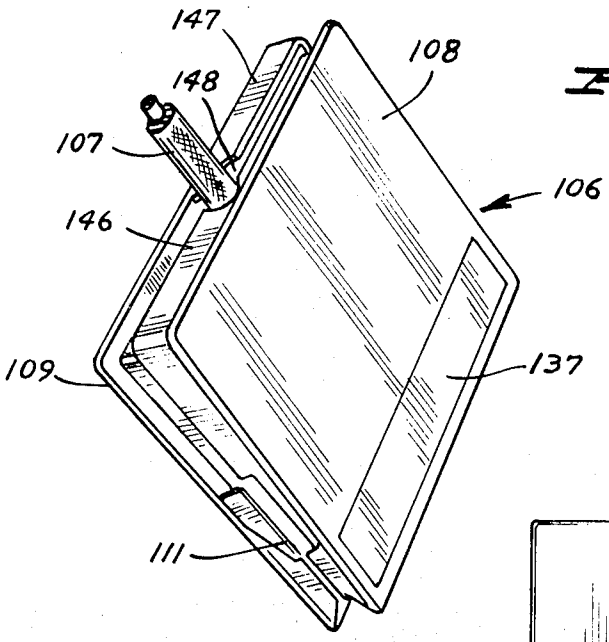

FIG. 7

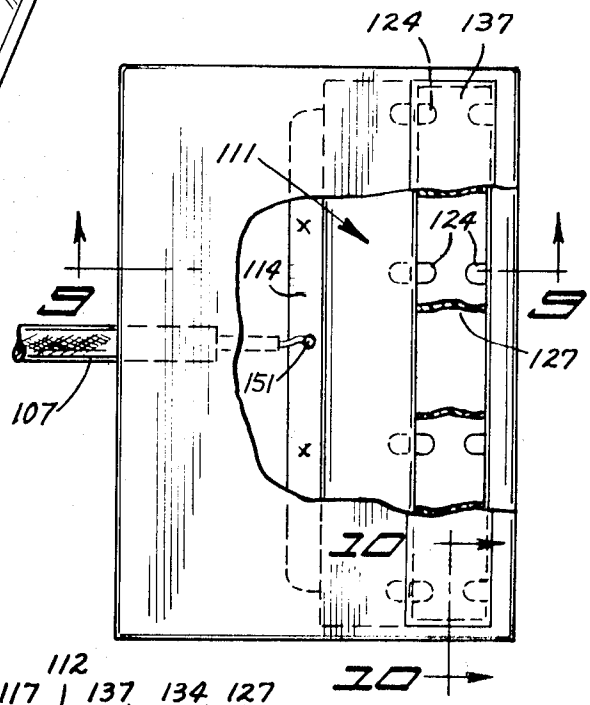

FIG. 8

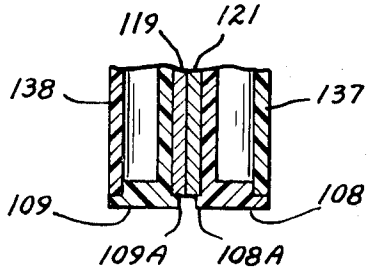

FIG. 10

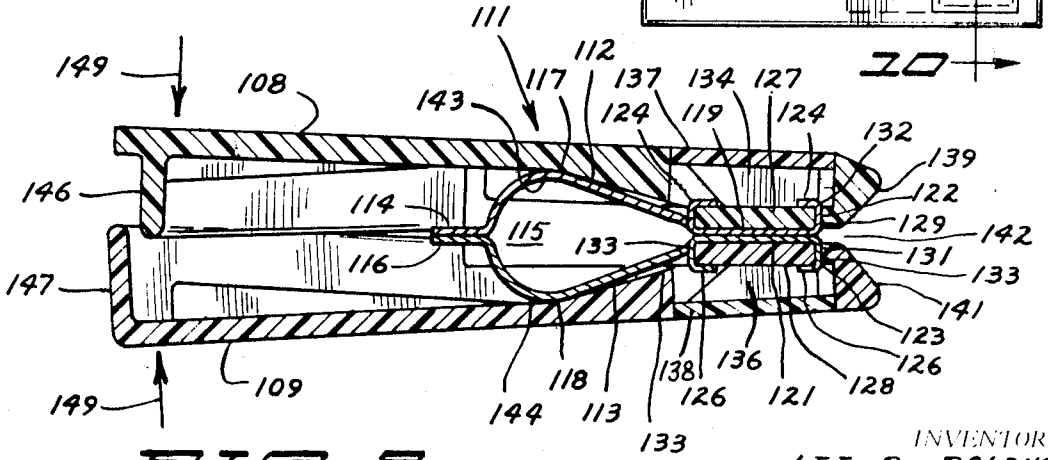

FIG. 9

INVENTOR.
LEE R. BOLDUC

BY
Burd, Braddock & Bartz

ATTORNEYS

CLAMP FOR DISPOSABLE GROUND PLATE ELECTRODE

BACKGROUND OF THE INVENTION

Copending U.S. Pat. application Ser. No. 711,949, now U.S. Pat. No. 3,543,760 describes as disposable ground electrode and connector usable in an electrosurgical unit for cautery, fulguration, electrocoagulation and the like. The connector has a substantial flat surface engageable with the conductor skin of the ground electrode to provide a surface electrical contact between the connector and the ground electrode. The test circuit of the present invention functions to test the electrical contact between the connector and the ground electrode and provides a control so that when the circuit through the ground electrode is completed, the ground electrode will be automatically placed in a second high-voltage circuit.

SUMMARY OF INVENTION

The invention related to a connector attachable to a flat ground plate electrode having an electrically conductive skin. The connector has an electrical conductor positioned in positive surface engagement with the electrically conductive skin of the plate electrode. A biasing means yieldably urges and holds the conductor in engagement with the electrically conductive skin. The conductor is supported on a pivoted structure adapted to receive a force operable to move the electrical conductor away from the skin so that the connector can be disconnected from the plate electrode. In one form the connector has structure adjacent the conductor extended at an angle relative to the plane of the conductor to cooperate with a portion of the electrode to positively hold the conductor in assembled relationship with the plate electrode so that it cannot be accidentally removed or partially separated from the electrode when the conductor is held in physical engagement with the skin. The connector can be a bipolar device having a pair of spaced electrical contact members with flat surfaces clamped into surface engagement with the skin of the ground plate electrode. One form of the connector has cover members which support and insulate the electrical plate contacts.

In the drawings

FIG. 1 is a diagrammatic view of the electrical-surgical unit equipped with the ground electrode and connector of the invention used on a patient lying on an operating table;

FIG. 2 is a perspective view of the releasable connector attached to an edge of the ground plate electrode;

FIG. 3 is a side view of one form of the connector of FIG. 2, partly sectioned, in assembled relation with a ground plate electrode;

FIG. 4 is an electrical diagram of the test and control circuit;

FIG. 5 is a plan view with parts broken away of another form of the connector;

FIG. 6 is an enlarged sectional view taken along the line 6—6 of FIG. 5;

FIG. 7 is a perspective view of a further form of the connector;

FIG. 8 is a plan view of the connector of FIG. 7 partly broken away to illustrate the contact plates;

FIG. 9 is an enlarged sectional view taken along line 9—9 of FIG. 8, and FIG. 10 is an enlarged sectional view taken along line 10—10 of FIG. 8 Referring to the drawing there is shown in FIG. 1, an electrosurgical unit indicated generally at 10 illustrated in operating environment on a patient 11 lying on a table 12. Table 12 is supported on floor 13 by an upright base 14 to locate the patient in a convenient position for surgeon 16.

The electrosurgical unit 10 uses high-frequency current from a portable transformer 17 connected to power supply lines 18 and to an active electrode 19 by a cable or line 20. The circuit through the patient 11 is completed with a ground plate electrode 21 located in contact with an area of the skin of the patient. A line or cable 22 connected to the electrode 21 through a releasable connector indicated generally at 23 clamped to the ground plate electrode 21 completes the circuit to the transformer. The opposite end of line 22 is connected to a test and control circuit indicated generally at 24 carried by the transformer 17. In use, the surgeon 16 prior to operative use of the active electrode 19 will visually observe a light 63 on the test and control circuit to see if the releasable connector 23 is in electrical contact with the ground plate electrode 21 and determine if high voltage is present in the operating circuit.

Referring to FIGS. 2 and 4, there is shown the disposable ground plate electrode 21 as having a flat base 26 covered with an electrically conductive skin 27. Plate 21 has an end flange or flap 28 folded over forming a stop edge 29. The base can be impregnated with a plastic material which bonds the skin 27 to the top of the base. The skin is an electrically conductive material, as sheet metal or aluminum foil. The ground plate electrode 21 is described in detail in copending U.S. application Ser. No. 711,949, filed Mar. 11, 1968.

The releasable connector 23 functions to provide an electrical connection between the cable 22 and the ground plate electrode 21. Connector 23, shown in FIGS. 2 and 4, has a C-clamp 31 pivotally carrying a pair of angularly disposed levers 32 and 33. As shown in FIG. 2, lever 32 has separated contact plates 34 and 36 and rearwardly directed conductor arms 34A and 36A separated with plastic or other nonelectrically conductive material 37. Lever 33 may have similar separated plates formed with a rearwardly directed lip 38A to hold the contact plates 34 and 36 in flat surface engagement with the electrically conductive skin 27 of the ground plate electrode 21.

Referring to FIG. 3, there is shown a modified conductor 23A having a plate 40 carrying a downwardly directed projection or finger 39 extended through a hole 41 in plate 21 and hole 42 in the lip 38A. The other contact plate may also have a similar projection or finger located in aligned holes in plate 21 and separated lip. The projections positively lock the releasable connector 23A to the ground electrode plate 21 so that it can not be accidentally removed or partially separated from the plate electrode 21.

The entire C-clamp and exposed portions of the levers 32 and 33 are coated with a plastic insulative material so that the connector can not short out the ground electrode 21 causing burning of the patient. The lines 43 and 44 from the cable 22 are connected to the terminal portions of the conductors 34A and 36A respectively shown in FIG. 2.

Referring to FIG. 4, there is shown connector 23 in assembled relation with the ground plate electrode 21 along with the test and control circuit 24. The transformer 17 provides the circuit 24 with a low-voltage source 46 and a high-voltage source 47. Line 48 connects a coil 49 of a relay 51 to the low-voltage source 46. The coil 49 is connected to line 43 leading to the conductor arm 34A. A manually operated control switch 52 interposed in the line 48 between the coil 49 and the low-voltage source 46 controls the circuit for the low-test voltage and the circuit for the high voltage. The low-voltage circuit is completed with a line 53 connected to the line 44 leading to the opposite conductor arm 36A of the connector 23. Relay 51 has three contacts 54, 55 and 56 and a pair of movable switching elements 57 and 58 operably associated with the coil 49. Switching element 57 is connected with a line 59 to the line 43. Switching element 58 is connected with a line 61 to the line 44. The contact 54 is connected to a line 62 which leads to the low-voltage line 48. A light 63 is interposed in the line 62 to indicate an improper or insulated electrical connection between the connector 23 and ground electrode 21. The light 63 may be replaced with an electrically operated sound-producing device or other signal means to provide a sensing signal indicating a defective electrical connection between the connector 23 and the ground electrode 21. Both contracts 55 and 56 are connected to the high-voltage line 64 to complete one line of the high voltage circuit. The high-voltage circuit is completed through the patient 11, the ground electrode 21 and line 20.

In use, the switch 52 is closed connecting the high-voltage source 46 to the connector 23. With the relay 51 in its normal position the switching elements 57 and 58 are out of engagement with the contacts 55 and 56. The element 58 engages the contact 54 closing the circuit to the light 63. When the light 63 is "on," there is nonelectrical contact between the connector 23 and the electrode 21 in that current does not flow via the ground electrode 21 between the contact plates 34 and 36. When the connector 23 is in proper electrical contact with the electrode 21, the low-voltage circuit is completed through the plates 34 and 36 via the electrical conductive skin 27 to energize the coil 49. This moves the switching elements 57 and 58 into engagement with the contacts 55 and 56 thereby opening the circuit to the light 63 and closing the high-voltage circuit to the connector 23. Both contact plates 34 and 36 are connected in the high voltage circuit by virtue of the two switching elements 57 and 58. The high-voltage circuit is completed through the active electrode 19, the patient 11 and the cable 20.

Referring to FIGS. 5 and 6, there is shown the modified flat connector indicated generally at 66 for connecting the line 22 to the disposable ground plate electrode 21. The connector 66 has a pair of identical clamp contact members 67 and 68 formed from conductive material, as sheet metal. The contacts 67 and 68 are enclosed in the secured to flat identical covers 69 and 71 of electrically insulative material such as plastic and the like. The contact members 67 and 68 are identical in structure and are located in spaced side relation in the cover to form a bipolar connector.

As shown in FIG. 6, clamp contact member 67 comprises a pair of conductor members 72 and 73 having engaging transverse ribs 74 and 76 secured together, as by spot welds, to form a one-piece clamp. The center or body sections 77 and 78 of the members curve outwardly to form a transverse chamber 79. The forward portion of members 72 and 73 are flat contact plates 80 and 81 which are biased together by the curved sections 77 and 78. Projected upwardly from the front and rear edges of the sections 80 and 81 are pairs of upright ears 82 and 83 securing the plates 80 and 81 to the covers 69 and 71. The forward or front edges of the plate contacts 80 and 81 have transverse outwardly directed flanges 84 and 86 extend over the front side of cover walls 87 and 92 respectively. Flange 84 is located in a transverse groove 89 along the front side of wall 87.

Located on opposite sides of the wall 87 are holes 88 for accommodating the ears 82. Wall 87 forms the bottom of the recess 90 in the cover 69 which is closed with a strip closure 91 mounted on the cover flush with the flat outer side of the cover 69. The member 72 is fastened to the wall 87 by turning the ears 82 over the top of the wall 87. Member 73 is attached to the wall 92 in a similar manner. The ears 83 project through holes 93 in the cover on opposite sides of the wall 92 with the forward flange 86 located in a transverse groove 94. The cover 69 has a recess 96 for the turned over ears 83 which is closed with a strip closure 97 mounted on the cover flush with the flat outer side of the cover 71. With the members 72 and 73 secured to the walls 87 and 92 respectively, the transverse curved bodies 77 and 78 are in transverse engagement along bearing or fulcrum lines 98 and 99 with transverse midportions of the covers 69 and 71. The lines 98 and 99 extend along the midsection of the covers rearwardly of the walls 87 and 92, so that movement of the covers 69 and 71 toward each other in the direction of the arrows 100, the covers 69 and 71 will fulcrum along the fulcrum lines 98 and 99 spreading the plate contacts 80 and 81 whereby the ground plate electrode 21 may be inserted between the plate contacts 80 and 81. The biasing action of the curved sections 77 and 78 will hold the plate contacts 80 and 81 in flat surface engagement with opposite sides of the ground plate electrode 21.

The peripheral edges of the covers 69 and 71 have inwardly directed side and end flanges 101 and 102 located in a relative lapped relation so that the covers can be moved toward each other and enclose the electrical connections of the lines 43 and 44 to the clamp contact members 67 and 68 respectively.

As shown in FIG. 6, the front edges of the covers 69 and 71 have forwardly projected and outwardly tapered nose portions 103 and 104 which provide rearwardly converging guide surfaces leading to the plate contacts 80 and 81. The nose portions 103 and 104 extend transversely parallel to the plate contacts 80 and 81 and are separated from each other forming a mouth 94. Referring to FIGS. 7 to 10, there is shown a further modified flat connector indicated generally at 106 attached to a line 107 adapted to be connected to an electrosurgical electrosurgical unit as shown in U.S. Pat. No. 3,543,760. The connector 106 has a pair of cooperating flat electrically insulative identical covers 108 and 109 enclosing and mounting electrical clamp plates indicated generally at 111. The covers can be molded from plastic material, as a polycarbonate resin (L exan).

The clamp plates 111 comprises a pair of identical electrical conductor members 112 and 113 formed of sheet metal having transverse ribs 114 and 116 secured together by spot welds or the like. The ribs 114 and 116 are joined to outwardly curved body sections 117 and 118 terminating in transverse facing flat contact plates 119 and 121. The body sections 117 and 118 are curved in opposite directions and form a chamber or space 115 for the edge of the ground electrode 21. Transversely along the front of the plates 119 and 121 are outwardly directed flanges 123 and 124. Each member 112 and 113 is formed from a single metal blank which is stamped or otherwise deformed to make the rib, body contact plate and flange. Flange 122 has front and rear ears 124 which extend over a transverse wall 127 of the cover 108. The flange 122 projects into a transverse groove 129 located along the front of wall 127. Flange 123 is in a similar groove 131 located in the cover 109 adjacent to the forward edge of the wall 129. The contact plate 121 has ears 126 which extend over the edges of the wall 128 to secure the member 113 to the cover 109. As shown in FIG. 10, the ends of the contact plates 119 and 121 are also held in the covers 108 and 109 by side lips 108*a* and 109*a*.

Returning to FIG. 9, the ears 124 and 126 are in recesses 134 and 136 on the outer sides of the covers 108 and 109 respectively. The walls 127 and 128 form the bottom of the recesses as well as the supports for the contact plates 112 and 113. Closure members 137 and 138 fit into the top of the recesses 134 and 136 to close the recesses.

Covers 108 and 109 have transverse front nose portions 139 and 141 with converging faces leading to mouth 142. THe nose portions 139 and 141 form tapering tapering transverse groove or mouth 142 which is used to direct the edge of the ground electrode directly in front of the contacting portions of the contact plates 119 and 121. The outwardly directed body sections 117 and 118 have transverse and parallel pivot or fulcrum lines 143 and 144 for the covers 108 and 109. The inside midportions of the covers 108 and 109 contact the fulcrum lines 143 and 149 so that on squeezing the rear portions of the covers 108 and 109, as indicated by the arrow 149, the nose portions 139 and 141 will move away from each other spreading the contact plates 119 and 121. On release of the squeezing force on the covers 108 and 109, the resilient spring action of the members 112 and 113 will force the contact plates 119 and 121 toward each other into surface contact with each other or a ground electrode.

The covers 108 and 109 have inwardly directed side and end flanges 146 and 147 which are offset relative to each other to enclose the rear portion of members 112 and 113. The flanges have hole 148 for the cord or line 109 which is attached to the flange 114 by a connection 151 shown in FIG. 8.

Connector 106 is usable to make an electrical connection with any type of electrical conductor member having a generally flat portion engageable with at least one of the plate contacts. The conductor covers are identical in size and shape so that they can be made from a single mold. The electrical conductor members 112 and 113 are also identical members secured together along ribs 114 and 116 to form a spring clamp. The ears 124 and 126 can be turned over with an assembling die to secure the contact plates to the covers 108 and 109.

The embodiments of the invention in which an exclusive property or privilege is claimed are defined as follows:

1. An electrical connector attachable to an edge of a disposable ground plate electrode having a generally flat, flexible base, an electrically conductive skin means attached to and substantially covering one side of the base, said skin means having a substantial surface area for engagement with a surface of a body to make a large surface electrical contact between the skin means and the surface of the body, the improvement of: electrical conductor means having generally flat contact plate means located in a plane and positionable in physical engagement with the electrically conductive skin means of the plate electrode, electrically insulative first cover means attached to the conductor means and covering outer portions of the conductor means, electrical line means attached to the conductor means, facing the plate means of the electrical conductor means and engageable with the plate electrode on the side thereof opposite the electrical conductor means, electrically insulative second cover means attached to the means facing the plate means and covering outer portions of the means facing the plate means, biasing means for yieldably urging the plate means of the electrical conductor means toward the means facing the electrical conductor means whereby the plate means of the electrical conductor means is maintained in physical engagement with the electrically conductive skin means, said connector having a portion extended at an angle away from the plane of the plate means and a space for an edge of the plate electrode, pivoting means cooperating with the first cover means and second cover means to control the pivotal movement of the first cover means and second cover means, said first and second cover means adapted to receive a force operable to move the plate means of the electrical conductor means away from the means facing the plate means.

2. The connector of claim 1 wherein each cover means has a transverse wall

3. The connector of claim 2 wherein each cover means has a flat outer side, a transverse recess in the forward portion of the outer side of the cover means, said wall forming each bottom of the recess in each cover means.

4. The connector of claim 3 including closure means for covering the recesses.

5. The connector of claim 1 wherein the conductor means includes the biasing means, said biasing means having outwardly curved body sections having forward ends secured to the plate means and means facing the plate means, and rear ends secured together, said curved body sections biasing the conductor means toward the means facing the conductor means.

6. The connector of claim 1 wherein each cover means has a forwardly and outwardly directed nose extended substantially parallel to the plate means.

7 The conductor of claim 7 wherein: the contact plate means comprises separate electrical conductor contact plates, each plate having a substantially flat surface engageable with separate portions of the skin means.

8. The connector of claim 1 wherein: the extended portion on the connector comprises at least one projection extended through a hole in the plate electrode.

9. The connector of claim 1 wherein: the means facing the plate means is generally flat second electrical contact plate means.

* * * * *

(5/69)

UNITED STATES PATENT OFFICE

CERTIFICATE OF CORRECTION

Patent No. 3,624,590 Dated November 30, 1971

Inventor(s) Lee R. Bolduc

It is certified that error appears in the above-identified patent and that said Letters Patent are hereby corrected as shown below:

Column 1, line 6, "as" should be --a--;

Column 1, line 20, "related" should be --relates--;

Column 2, line 71, "contracts" should be --contacts--;

* Column 3, line 2, "46" should be --47--;

Column 3, line 25, "the" should be --and--;

Column 4, line 10, delete "electrosurgical";

* Column 4, line 25, "flanges 123 and 124" should be --flanges 122 and 123--;

* Column 4, line 32, "129" should be --127--;

Column 4, line 45, delete "tapering" (second occurrence);

* Column 4, line 53, "149" should be --144--;

* Column 4, line 64, "109" should be --107--;

Column 5, line 16, before "facing" insert --means--;

Column 6, line 21, "7" should be --1--.

Signed and sealed this 30th day of May 1972.

(SEAL)
Attest:

EDWARD M.FLETCHER, JR.
Attesting Officer

ROBERT GOTTSCHALK
Commissioner of Patents