US00D826304S

(12) **United States Design Patent** (10) **Patent No.: US D826,304 S**
Apothéloz (45) **Date of Patent: ** Aug. 21, 2018**

(54) **STAND AND PIVOT UNIT**

(71) Applicant: **Leica Microsystems (Schweiz) AG**, Heerbrugg (CH)

(72) Inventor: **Christophe Apothéloz**, Zurich (CH)

(73) Assignee: **Leica Microsystems (Schweiz) AG**, Heerbrugg (CH)

(**) Term: **15 Years**

(21) Appl. No.: **29/542,687**

(22) Filed: **Oct. 16, 2015**

(30) **Foreign Application Priority Data**

Apr. 17, 2015 (EM) 002683813

(51) **LOC (11) Cl.** **16-06**

(52) **U.S. Cl.**
USPC **D16/131**

(58) **Field of Classification Search**
USPC D16/130–136; D22/100, 108, 109, 110, D22/199; 33/297, 298, 227, 299; 42/111, 112, 113, 122, 130, 134–145, 42/124; 356/29, 139, 2, 250, 251, 252, 356/138; 89/41, 19, 161, 200–204; 350/550; 250/467.1; 359/428, 424
CPC F41G 3/08
See application file for complete search history.

(56) **References Cited**

U.S. PATENT DOCUMENTS

D191,330	S	*	9/1961	Armbruster	D16/131
D198,104	S	*	4/1964	Armbruster	D16/131
D252,276	S	*	7/1979	Griffith	D16/131
D260,402	S	*	8/1981	Hodgson	D16/131
D290,129	S	*	6/1987	Kahute	D16/131
D291,702	S	*	9/1987	Kahute	D16/131
D345,748	S	*	4/1994	Holbl	D16/131
D354,761	S	*	1/1995	Komatsuzaki	D16/131
D389,163	S	*	1/1998	Hofmann-Igl	D16/131
D400,548	S	*	11/1998	Komatsuzaki	D16/131
D425,921	S	*	5/2000	Holbl	D16/131
D429,265	S	*	8/2000	Holbl	D16/131
D444,159	S	*	6/2001	Hoelbl	D16/131
D457,901	S	*	5/2002	Lo	D16/131
D498,247	S	*	11/2004	Suzuki	D16/131
D507,006	S	*	7/2005	Apotheloz	D16/131
D516,595	S	*	3/2006	Apotheloz	D16/131
D540,835	S	*	4/2007	Apotheloz	D16/131
D546,357	S	*	7/2007	Apotheloz	D16/135

(Continued)

Primary Examiner — Susan Bennett Hattan
Assistant Examiner — Jennifer M Campbell
(74) *Attorney, Agent, or Firm* — Crowell & Moring LLP

(57) **CLAIM**

The ornamental design for a stand and pivot unit, as shown and described.

DESCRIPTION

This application contains subject matter related to the following co-pending U.S. design patent applications:
Application Ser. No. 29/542,679, filed herewith and entitled "Microscope Stand"; and
Application Ser. No. 29/542,681, filed herewith and entitled "Microscope Pivot Unit"; and
Application Ser. No. 29/542,684, filed herewith and entitled "Microscope".
FIG. **1** is a front view of a stand and pivot unit according to the design;
FIG. **2** is a left side view thereof;
FIG. **3** is a right side view thereof;
FIG. **4** is a rear view thereof;
FIG. **5** is a front, left perspective view thereof;
FIG. **6** is a top view thereof; and,
FIG. **7** is a bottom view thereof.
The broken lines are for illustrative purposes only and form no part of the claimed design.

1 Claim, 7 Drawing Sheets

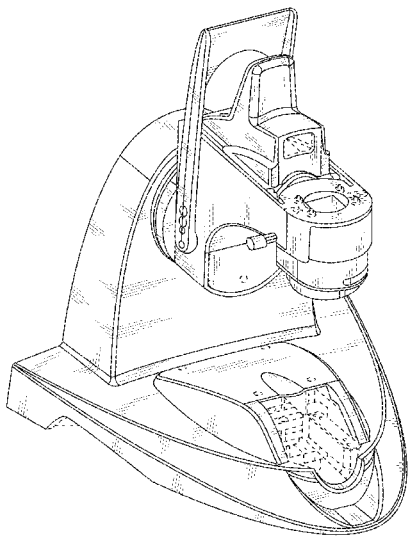

(56) **References Cited**

U.S. PATENT DOCUMENTS

D738,415	S *	9/2015	Hofmann	D16/131
D743,463	S *	11/2015	Hofmann	D16/131

* cited by examiner

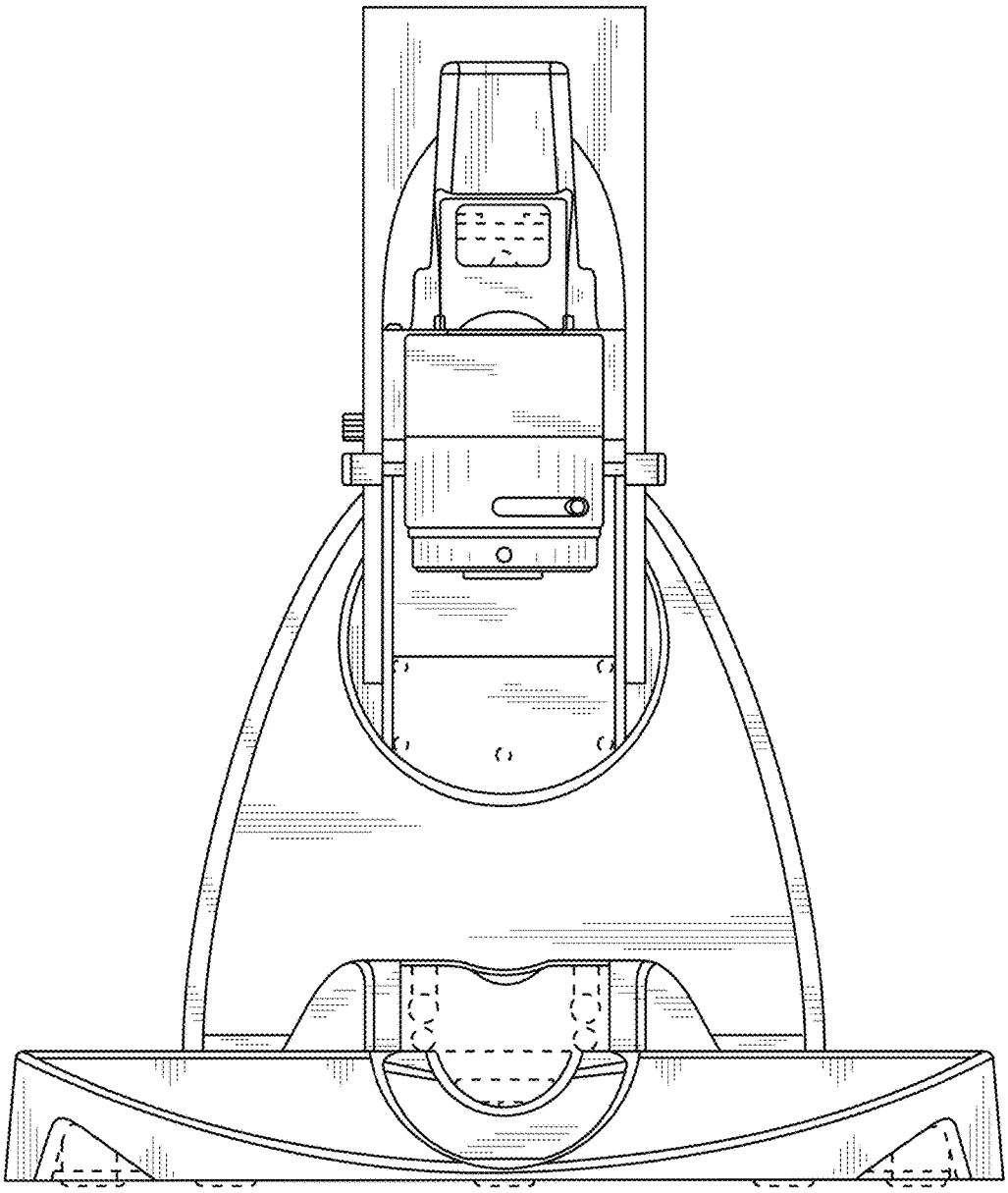

FIG. 1

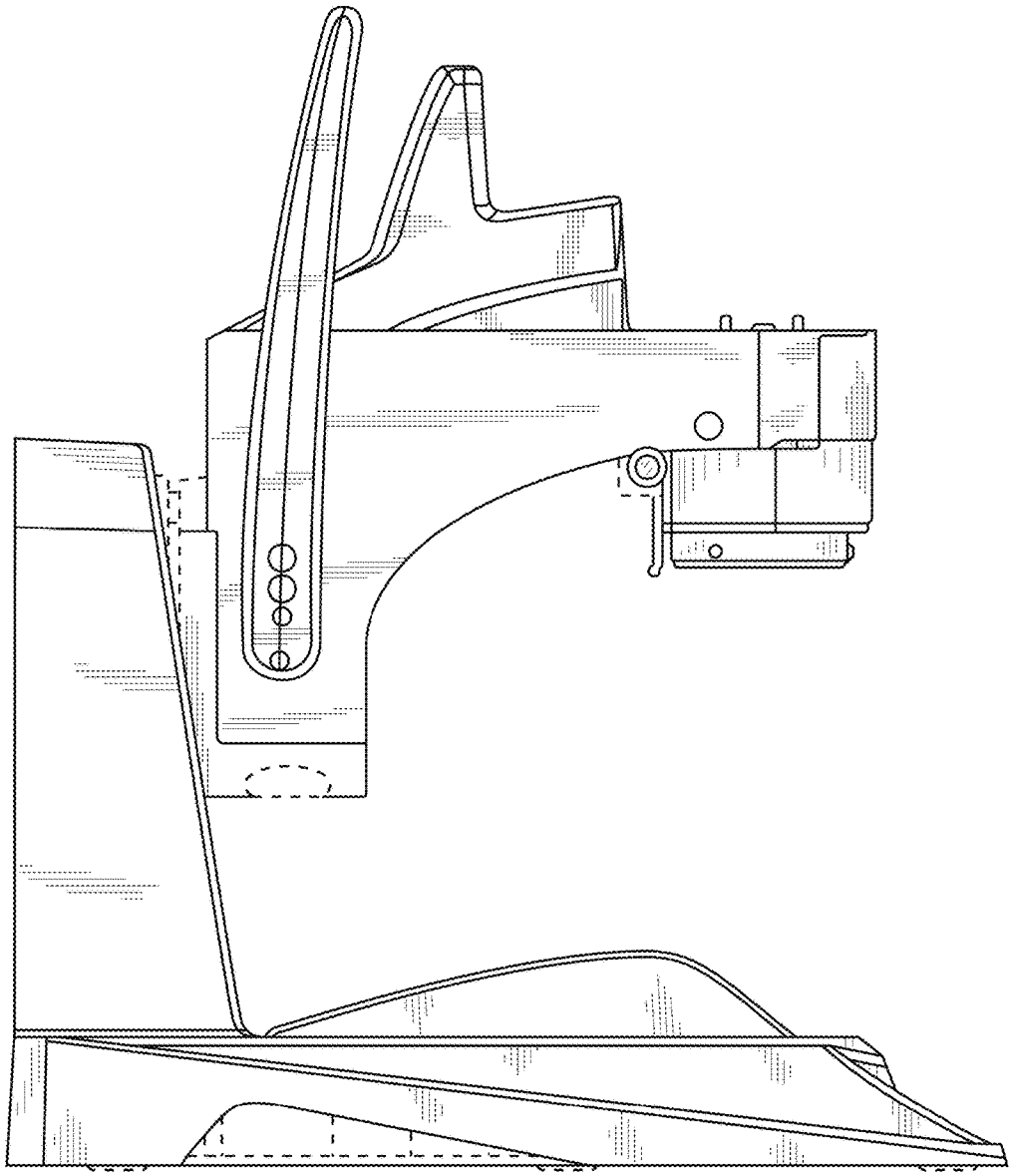

FIG. 2

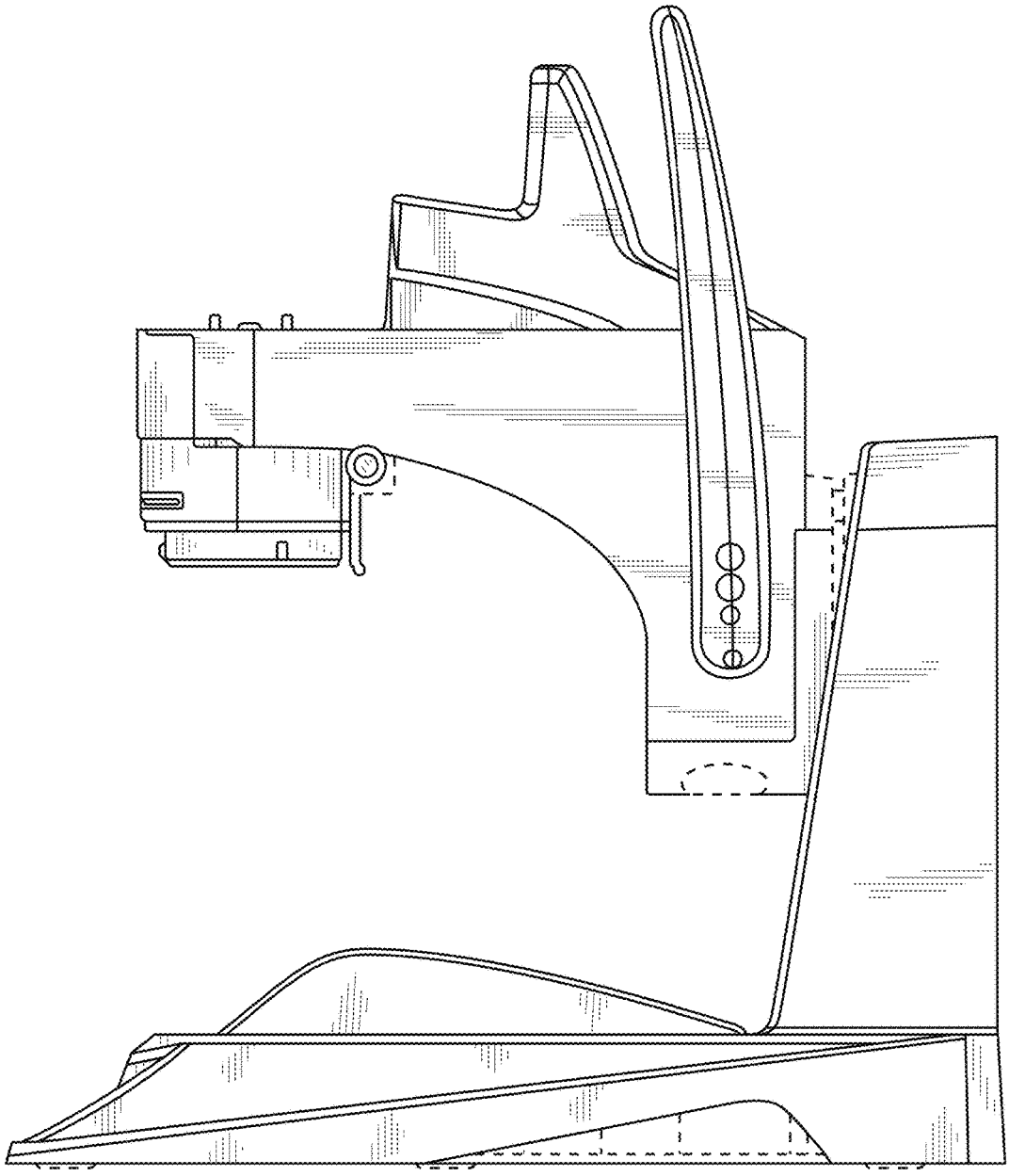

FIG. 3

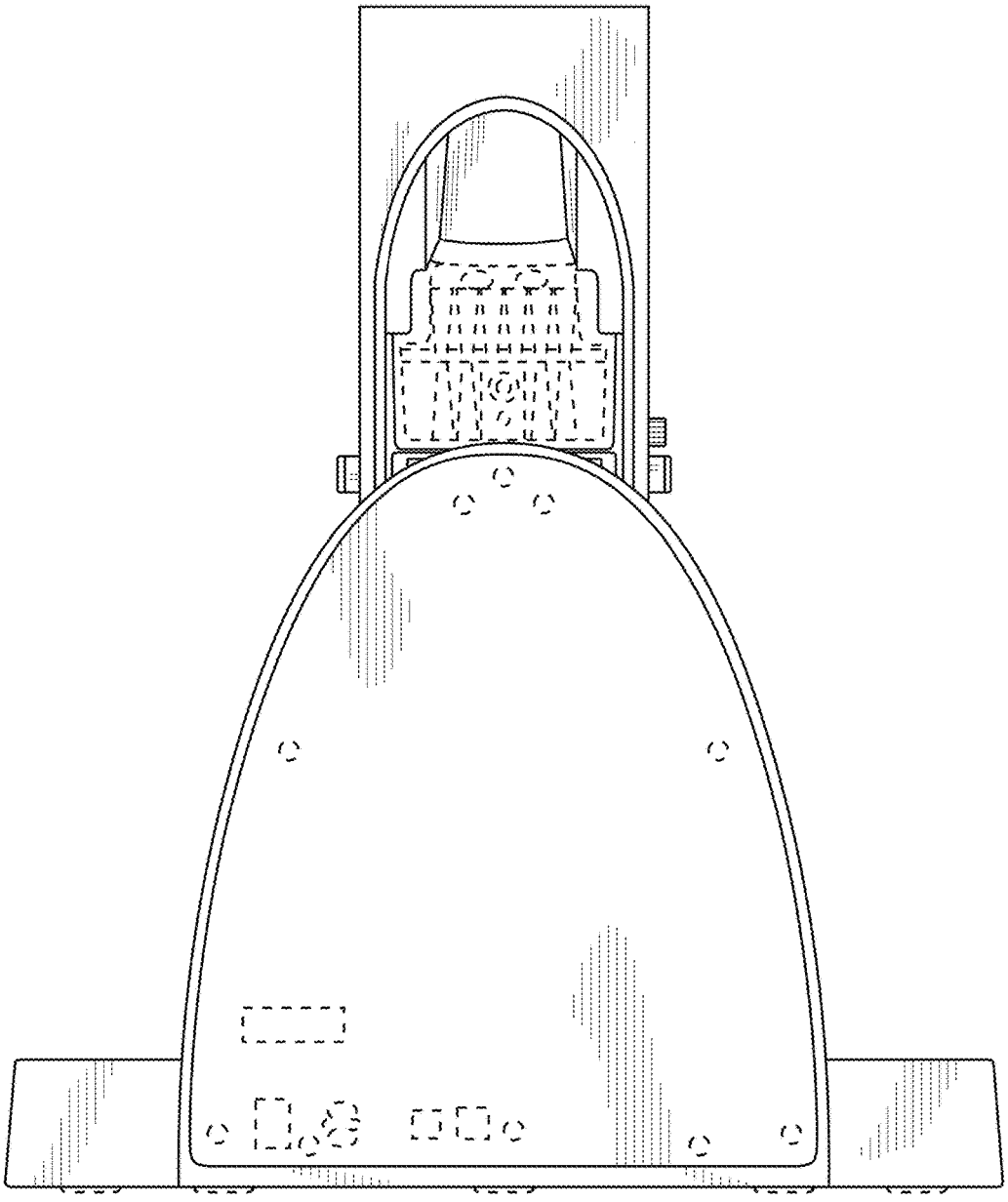

FIG. 4

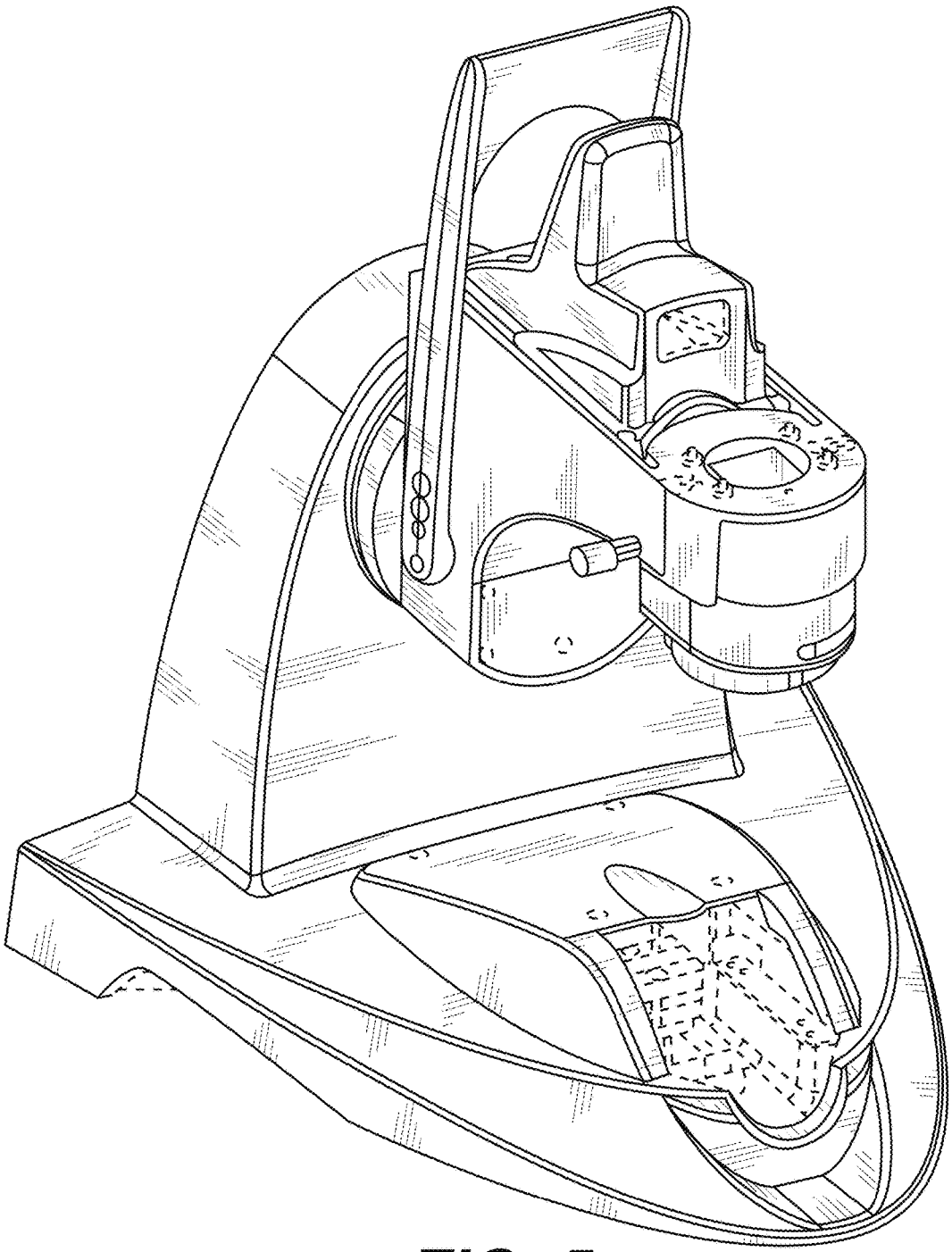

FIG. 5

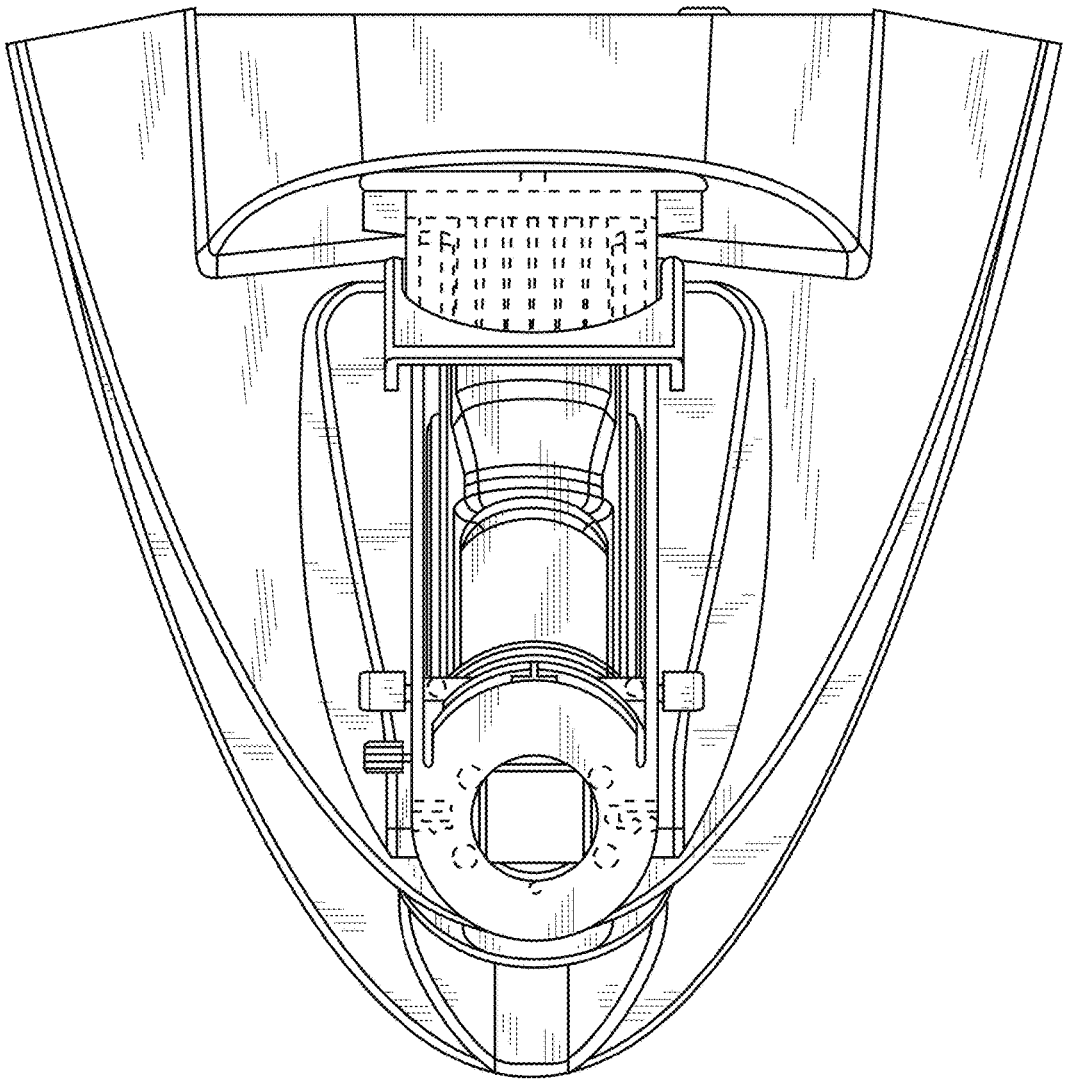

FIG. 6

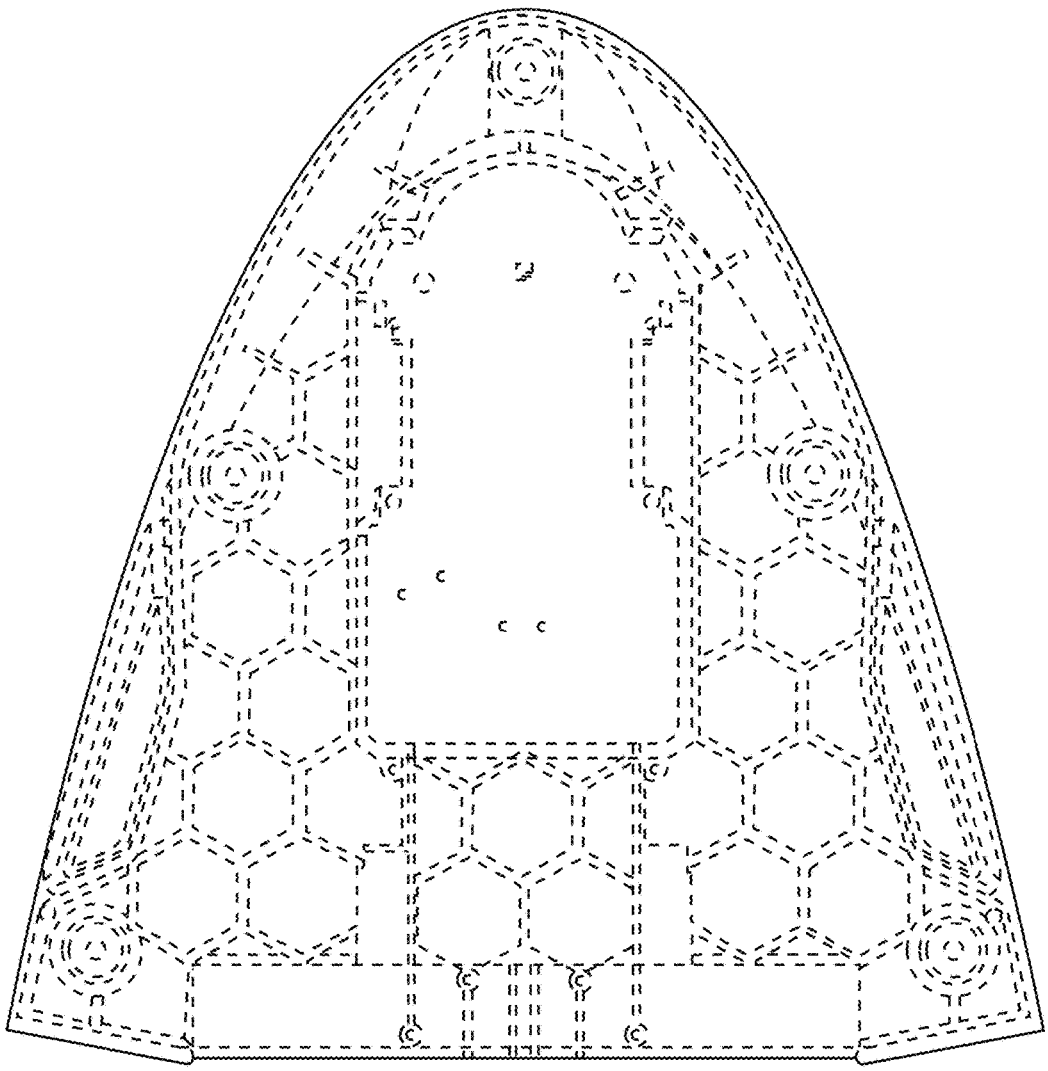

FIG. 7