June 3, 1930. J. ZUBATY 1,761,955

MOUNTING MEANS FOR SPEEDOMETERS

Filed June 2, 1928

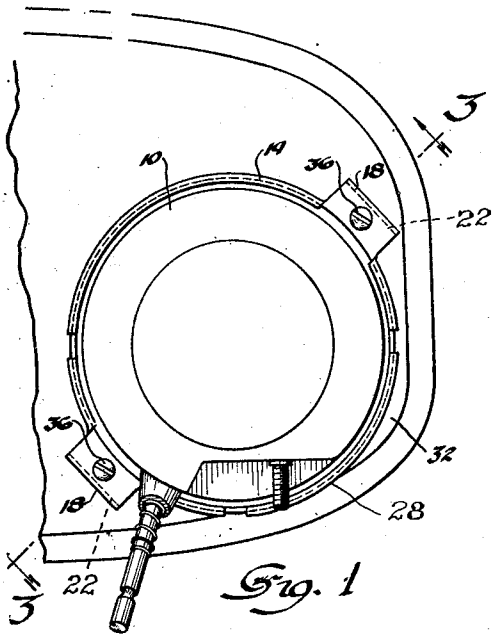

Fig. 1

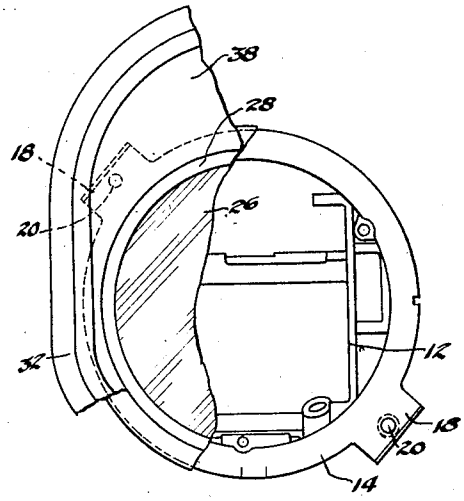

Fig. 2

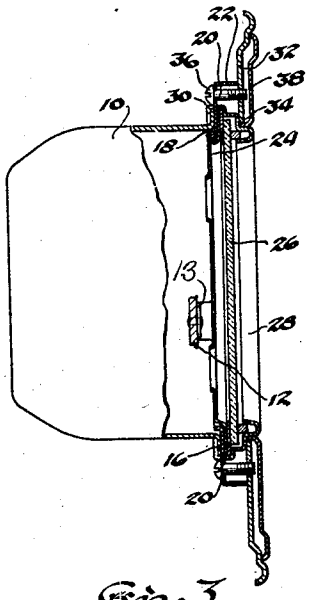

Fig. 3

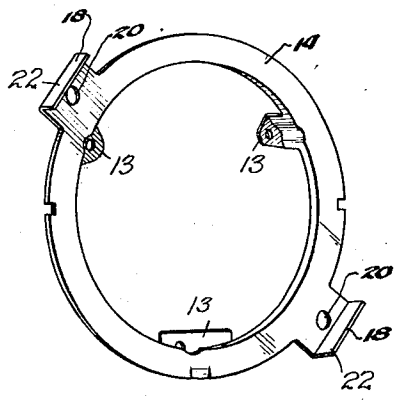

Fig. 4

Inventor

Joseph Zubaty

By Blackmore, Spencer & Hiil

Attorneys

Patented June 3, 1930 1,761,955

UNITED STATES PATENT OFFICE

JOSEPH ZUBATY, OF FLINT, MICHIGAN, ASSIGNOR TO A C SPARK PLUG COMPANY, OF FLINT, MICHIGAN, A COMPANY OF MICHIGAN

MOUNTING MEANS FOR SPEEDOMETERS

Application filed June 2, 1928. Serial No. 282,378.

This invention relates to the mounting of instruments on instrument panels.

It has heretofore been proposed to provide the housing of the instrument with ears or flanges for engagement by clamping means such as bolts or screws to secure the instrument to the panel. It has proven difficult to form ears on relatively deep instrument housings such as are used for speedometers, owing to the substantial deformation to which the metal must be subjected in the stamping operation. To properly form the ears it was necessary to employ unusually wide flanges at the open end of the housing, this involving a considerable waste of metal.

My invention consists in forming attaching ears on a shallow plate supported in the open end of the housing and carrying the mechanism of the instrument. This plate is substantially flat and may be readily formed as desired. The plate, as usually manufactured, is of resilient material and, because of this characteristic, provides a desirable mounting means.

In the drawing:

Figure 1 is a rear view of a portion of an instrument panel showing an instrument mounted thereon by the means constituting my invention.

Figure 2 is a front view of the construction of Figure 1 with parts broken away.

Figure 3 is a section on line 3—3 of Figure 1.

Figure 4 is a perspective view of the mounting plate.

I have illustrated my invention embodied in a speedometer, although it may be applied to various instruments. 10 indicates the speedometer housing and 12 the die-cast frame in which the movable parts of the mechanism are journaled. The frame 12 is provided with inwardly projecting lugs 13 riveted or otherwise secured to the annular plate 14 which is adapted to fit over the open end of the housing 10, resting on the outturned flange 16 provided on the housing. The plate 14 is provided with opposed ears 18, apertured as at 20, and provided with down-turned ends 22. The plate 14 is of spring metal so that the speedometer is to some extent cushioned. The housing of the instrument is covered by face plate 24 and glass 26, the parts being held together by the usual bezel 28 having its periphery spun over the flange 16 of the housing 10. The bezel is interrupted as shown at 30 to permit the passage of the ears 18. 32 indicates a portion of an instrument panel apertured as at 34 to display the face of the instrument. Bolts 36 passing through apertures 20 in the ears 18 and threading in the instrument panel 32, hold the instrument in position. The instrument panel may be provided with an ornamental cover plate 38 arranged as shown to cover the ends of the bolts and provide an ornamental finish.

The described construction is much preferable to prior designs in which the ears were integral with the instrument housing, for the reason that it is much simpler to shape the ears from a flat plate such as 14 than to make them a part of the relatively deep stamping such as shown at 10.

I claim:

1. An instrument comprising a housing, indicating mechanism, and means for supporting the mechanism within the housing comprising a plate on which the mechanism is mounted, said plate having a portion projecting outside of the housing, said portion being adapted for engagement by clamping means to secure the instrument upon a panel.

2. In the combination as defined in claim 1, a cover for said housing, said plate being clamped between the housing and the cover.

3. An instrument comprising a housing, indicating mechanism, means for supporting the mechanism within the housing comprising an annular member on which the mechanism is mounted, said annular member being

adapted to fit over the open end of the housing and having spaced ears projecting therebeyond, a cover for the housing, and means for clamping the cover, annular member, and housing together to form the complete instrument assembly.

4. The combination as defined in claim 3, said ears comprising radially extending portions apertured for the passage of securing bolts and down-turned ends adapted to engage the rear of the instrument panel.

In testimony whereof I affix my signature.

JOSEPH ZUBATY.