Nov. 27, 1928. 1,692,848

G. MANIERRE

TRUCK

Original Filed Feb. 14, 1921 3 Sheets-Sheet 1

Fig. 1.

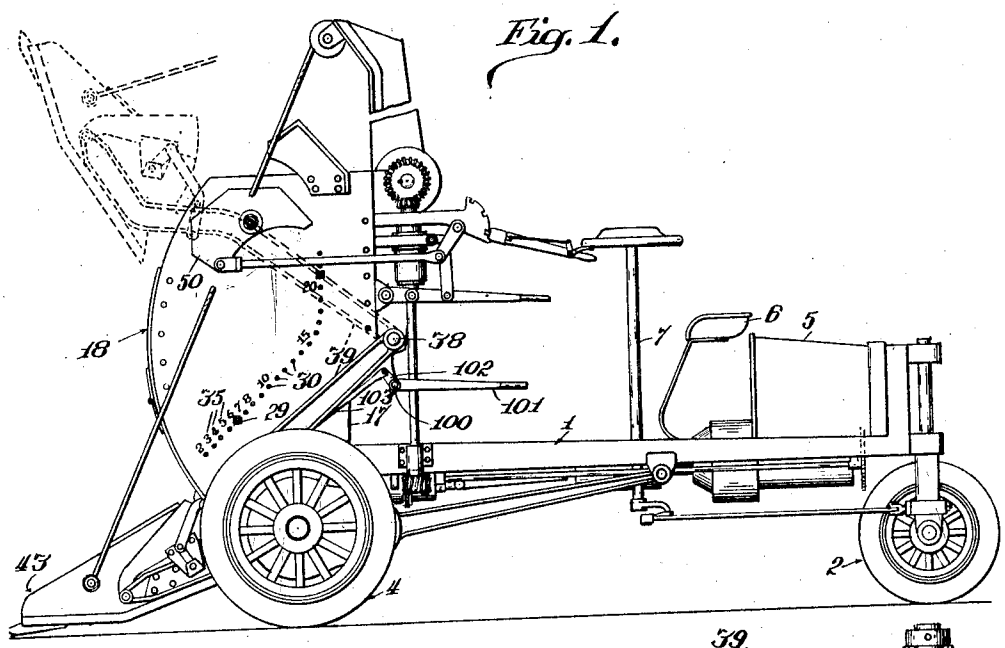

Fig. 2.

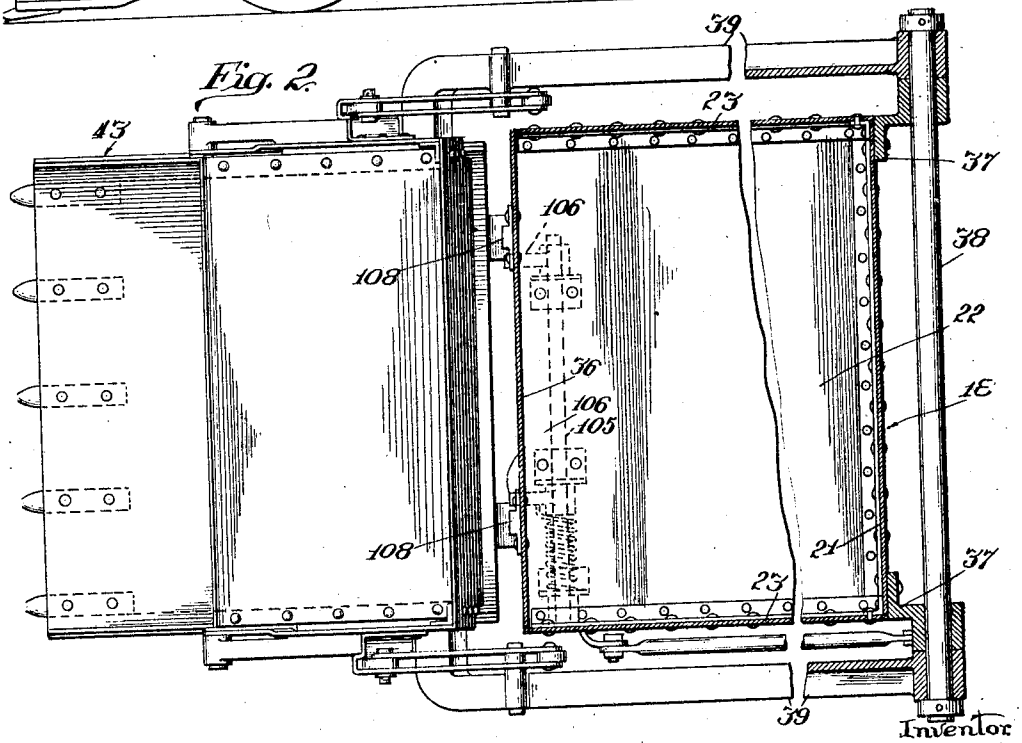

Inventor
George Manierre
Daniel F. Brennan.
Attorneys

Nov. 27, 1928. 1,692,848

G. MANIERRE

TRUCK

Original Filed Feb. 14, 1921 3 Sheets-Sheet 2

Fig. 3.

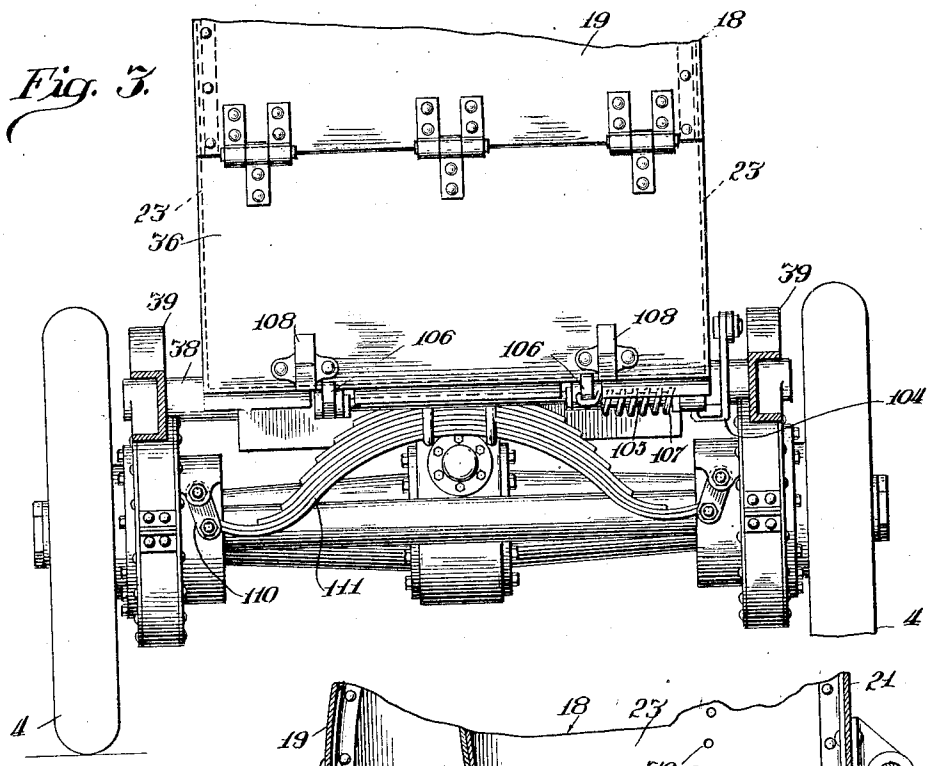

Fig. 4.

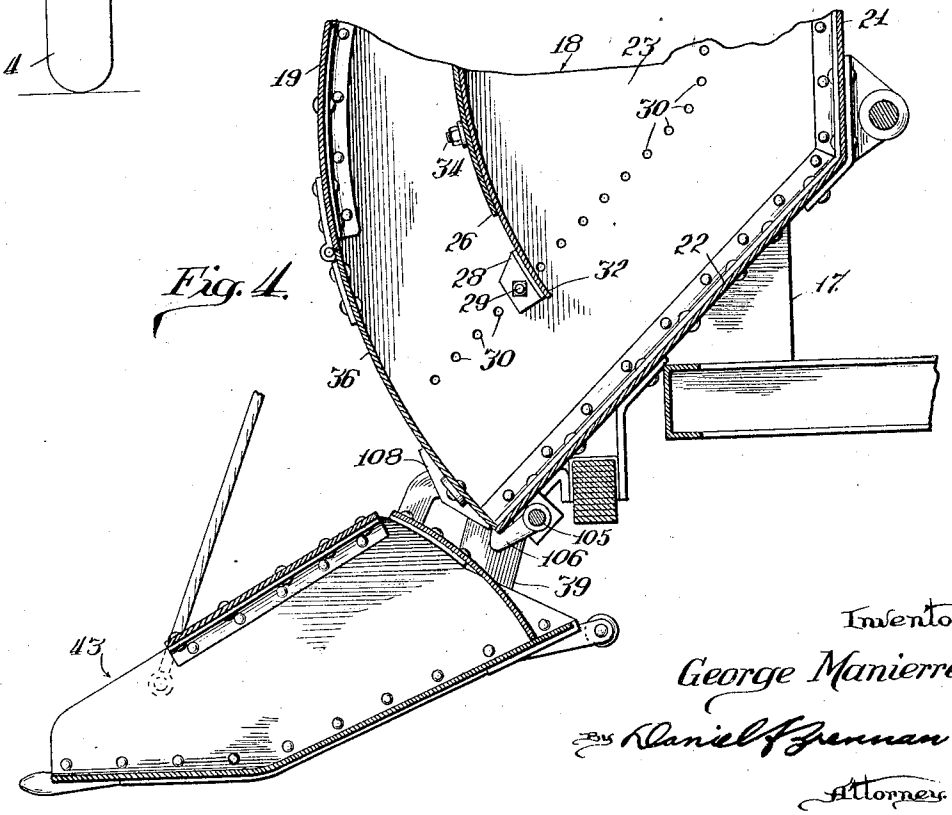

Inventor

George Manierre

By Daniel F. Brennan.

Attorney

Nov. 27, 1928. 1,692,848

G. MANIERRE

TRUCK

Original Filed Feb. 14, 1921 3 Sheets-Sheet 3

Fig. 5.

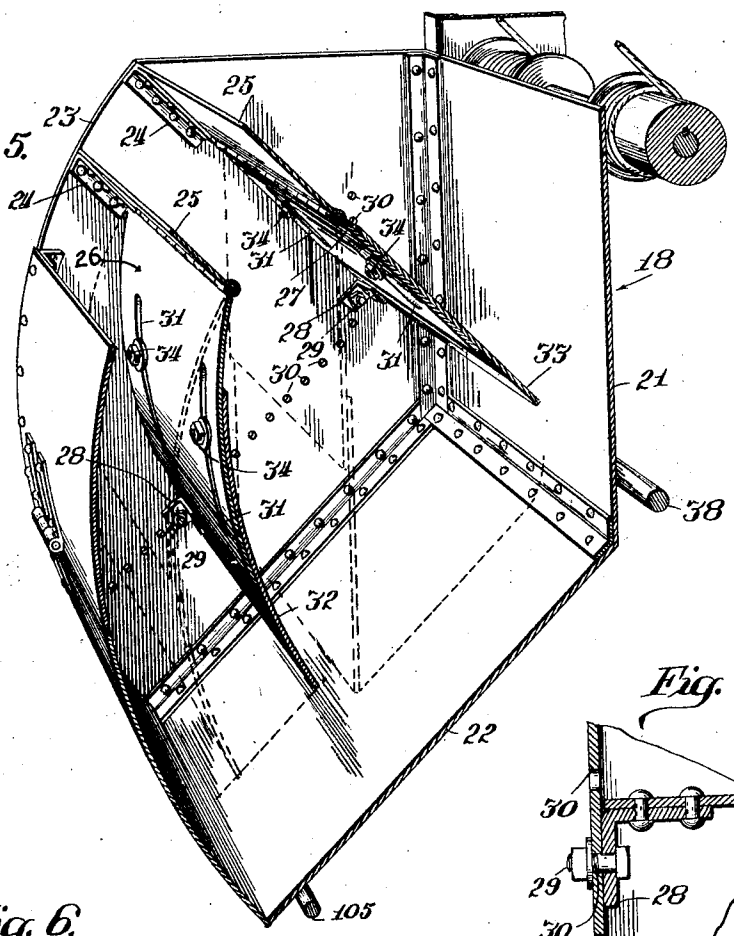

Fig. 7.

Fig. 6.

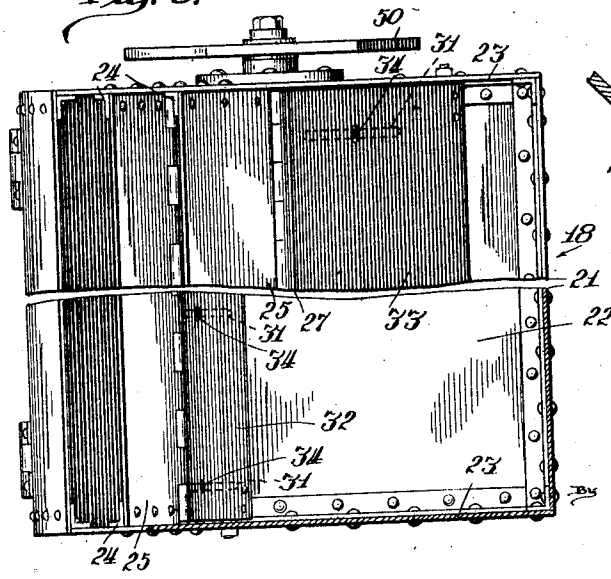

Fig. 8.

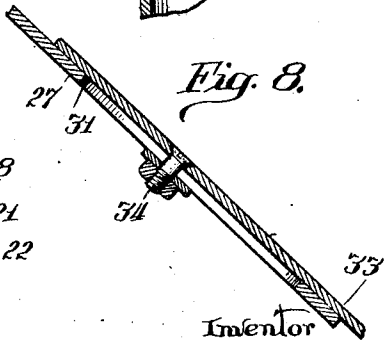

Inventor
George Manierre
By Daniel F. Brennan.
Attorney.

Patented Nov. 27, 1928. 1,692,848

UNITED STATES PATENT OFFICE.

GEORGE MANIERRE, OF MILWAUKEE, WISCONSIN.

TRUCK.

Original application filed February 14, 1921, Serial No. 444,868. Divided and this application filed March 17, 1924. Serial No. 699,766.

This invention relates to improvements in trucks, and particularly in load carrying boxes mounted on the trucks.

It is an object of the invention to provide in a load carrying box means for selectively permitting the introduction of assorted materials into different portions of the box and for mixing the materials thus introduced therein. For this purpose the load carrying box is divided into a plurality of compartments adapted to individually receive the various materials and which communicate with a collective space; from this collective space the mixture may then be transferred to a conveying device or the like, to carry the mixture to a concrete mixing machine or similar place for use.

It is another object of the invention to provide a load carrying box with a plurality of compartments, the volume of the individual compartments being selectively adjustable to facilitate the proportioning of the mixture of those materials which are to be carried to the collective compartment.

Another object of the invention is to provide in combination with a load carrying box a mechanism which can be controlled from a remote position by an attendant for opening a gate of the collective receptacle, into which the various classes of material have been thrown, this gate of the collective receptacle being closable in some other suitable way.

With these and other objects in view, an embodiment of the invention is illustrated in the accompanying drawings and is described in the following specification.

Fig. 1 is a side elevation of the machine showing a scoop in full lines in charging position and in dotted lines in a position to discharge into the load carrying box.

Fig. 2 is a top plan view partly in section of the load carrying box, shown in combination with a scoop in charging position.

Fig. 3 is a rear elevation of the load carrying box showing how it is supported on a vehicle frame.

Fig. 4 is a fragmental vertical sectional view taken through the rear part of the box and through the charging scoop.

Fig. 5 is a perspective sectional view showing the interior of the box.

Fig. 6 is a top plan view of the same shown partly in section.

Fig. 7 shows a detail sectional view of the means provided for adjusting the partition walls with respect to the sides of the box.

Fig. 8 is another sectional detail view showing the means for adjusting the companion sections of the partition walls.

The load conveying box 18 is shown in Fig. 1 as being mounted on a truck which comprises a frame 1, a single front wheel 2 by which the truck may be steered, and rear wheels 4 which may be driven in some suitable way by an engine, the hood of which is indicated at 5. The operator's seat 6 is mounted here relatively to the engine hood 5 and to the steering post 7 in a manner opposite from the ordinary arrangement of an operator's seat in power driven vehicles, as it is the intention to control from the operator's position 6 not only the travel of the truck but also the operations of charging the load carrying box 18 which is mounted thereon.

To support the load carrying box 18 on the frame 1 of the truck, the latter is equipped with a supporting bracket structure indicated generally at 17, Fig. 4. The box is provided with a vertical rear wall 21 and a slanting bottom 22. The front wall of this box, as indicated at 19, is preferably curved and a number of adjustable diaphragms or partition walls are located between the side walls 23 of the box, as perspectively shown in Fig. 5.

For the support of these diaphragms or partition walls which divide the interior of the box into a plurality of selectively adjustable compartments, angle irons 24 are rigidly secured to the side walls 23 in slanting position. These angle irons fixedly support inclined upper plates 25, to the lower edges of which plates or wings 26 and 27 are pivotally secured. These hinged plates may be curved, as the plate 26 is shown, or straight, as the plate 27 is shown, and extend downward into the interior of the carrying box 18. These plates furthermore are provided with lugs 28 near their lateral edges, Fig. 7, in the form of short lengths of angle irons or the like through which bolts 29 extend.

For the purpose of rendering the position of these hinged plates adjustable the side walls 23 of the box 18 are provided with a series of openings 30 in suitable graduated arrangement. The hinged plates 26 and 27 are also provided with slots 31 for receiving screws 34 secured to extension, or companion wings or plates 32 and 33 respectively. The

screws 34 may be tightened wherever it is desired within the slots whereby the total length of the diaphragms or partition walls formed by the plates 25, the wings 26 and 27 and their extensions 32 and 33, respectively, may be increased or decreased as desired.

Numeric indications 35, marked on the outside of the load carrying box 18, will facilitate the angular adjustment of the partition walls, the numerals being arranged in a predetermined relation with the cubic contents of the spaces confined by the walls 23 of the box and the partition walls.

One of the compartments formed in this way may serve to receive sand; another compartment may receive rock or gravel, and a third compartment may receive the cement necessary for the making of concrete.

The material which is selectively dumped into these various compartments of the box by any desired mechanism will be discharged from the collective space of the box through an opening adjacent the bottom controlled by a gate 36, this gate being hinged at its upper edge to the curved front wall 19 of the box, as shown in Figures 3 and 4; the gate, however, being normally held in closed position by a latch comprising hooks 106 rigidly mounted on a rock shaft 105.

Brackets 37, Fig. 2, rigidly secured to the rear wall 21 of the load carrying box 18 serve for rotatably supporting a shaft 38 from which lateral arms 39 extend. The front ends of these arms are secured to a shovel or scoop indicated at 43. The mechanism for actuating this shovel or scoop so as to move it to charging or discharging position, and the mechanism for opening and closing the scoop, does not form the subject matter of the present invention but is described in detail in Patent No. 1,506,762, dated September 2nd, 1924, and of which application the present is a divisional.

In said Patent No. 1,506,762 the means are also described for adjusting a cam 50 secured to the side wall 23 of the box 18 whereby the discharge movement of the scoop 43 may be controlled so as to effect the discharge into one or the other of the several compartments of the box as may be desired.

The sand, stone and cement having been deposited in the various compartments of the box and having been collected on the bottom wall 22 thereof may then be discharged in mixed condition upon opening of the gate 36. This mechanism also is under the control of the operator seated at 6. It comprises a transverse shaft or bar 100, Fig. 1, which is rotatably mounted at the rear wall of the box, also preferably in the bracket 37. This transverse pin or shaft is rigidly connected with a hand lever 101 within reach of the operator. An arm 102 also secured to the transverse pin or shaft 100 is movably connected by the link 103 with an angular arm 104 Fig. 4 mounted on the transverse shaft 105 which is supported as described above in the frame of the truck.

From Fig. 3 it is apparent that a helical spring 107 surrounds a portion of the shaft 105, one end of the spring being secured to the shaft while the other end of the spring is anchored in the bearing of the same. This spring therefore has a tendency also to rotate the latch hooks 106 in a predetermined direction, namely, in a direction in which they will hold the lower edge of the gate 36 in closed position as shown in Figs. 3 and 4.

Upon release of these hooks 106 effected by the operator through manipulation of the hand lever 101 the gate will by its own weight swing into open position and may be returned to closed position when the scoop 43 is lowered, as for instance by the mechanism described in Patent No. 1,506,762.

For this purpose the gate as shown in Fig. 3 is provided with lugs 108 of wedge shape. These lugs will be contacted by the scoop in the return movement of the latter and force the gate inwardly towards the position shown in Fig. 4. When the scoop has returned to its charging position, as indicated in Fig. 4, the gate will close and the latch hooks 106 automatically snap back owing to the action of the spring 107, thereby locking the gate.

The support of the load carrying box from the truck preferably includes a yielding support, as shown in Fig. 3, and comprises spring shackles 110 which are connected to a relatively heavy transverse spring 111 on which a rear portion of the box 18 rests. Any other suitable construction, however, may be used in place of the construction just described.

The operation of the device will be apparent from the above description. When it is desired to use the box for conveying a batch of material to a concrete mixer and to proportion the ingredients of the batch in accordance with the requirements, the pivoted partitions 26 and 27 within the box are adjusted thru release of the holding bolts 29 and fixing these bolts again in the new selectively determined position. The truck is then advanced to the various heaps of the ingredients and after driving the scoop 43 into each heap the operations of raising it to discharge position and of again lowering it are repeated until the desired quantity of each of the ingredients has been deposited in the selected compartment, the selection of the compartment being effected through suitable adjustment of the cam at the side wall of the box.

This operation is carried out for each of the materials and compartments respectively, and then the truck with its loaded box is driven to the receiving end of the shovel or shoe of a concrete mixer (not shown), while the scoop 43 is held in raised position, indicated in dotted lines in Fig. 1. The attendant then operates the lever 101 to release the

gate and the batch mixed in the collective chamber, which is below the individual compartments, is dumped into the shoe of the concrete mixer. The emptied truck is then withdrawn and the operations may begin again.

It is obvious that it is not necessary to utilize the various compartments provided in the box for receiving different classes of material but that this load carrying box may also be used for conveying in all of the compartments the same material or mixture of materials so that this load carrying box may be utilized in the same way as the ordinary body of power controlled vehicles. It is obvious that the machine also can be used as a tractor for pulling other road equipment, mixers, concrete machines and the like, and that the capacity of the load carrying box may be increased to satisfy all practical requirements.

I claim:

1. A load carrying box for vehicles having partition walls, the partition walls comprising portions fixed to the outer walls of the box, other portions movably attached to the fixed portions, and additional portions adjustable with respect to the movable portions and movable together with the same.

2. A load carrying box for vehicles having partition walls, the partition walls each comprising a portion fixed between the lateral walls of the box, a section hinged to the lower edge of the fixed portion and an extension section slidable with respect to the hinged section, and means for retaining said slidable and said pivotal section in predetermined adjustment with respect to each other.

3. A load carrying box for vehicles having partition walls, each partition wall comprising a fixed section and a movable section, means for extending the movable section longitudinally and in a direction away from the fixed section, and means for retaining the movable section in its adjusted extended condition.

In testimony whereof I affix my signature at 114 Grand Avenue, Milwaukee, Wisconsin.

GEORGE MANIERRE.