Nov. 25, 1958 B. ROSS 2,862,160

LIGHT SENSITIVE DEVICE AND METHOD OF MAKING THE SAME

Filed Oct. 18, 1955

FIG. 1

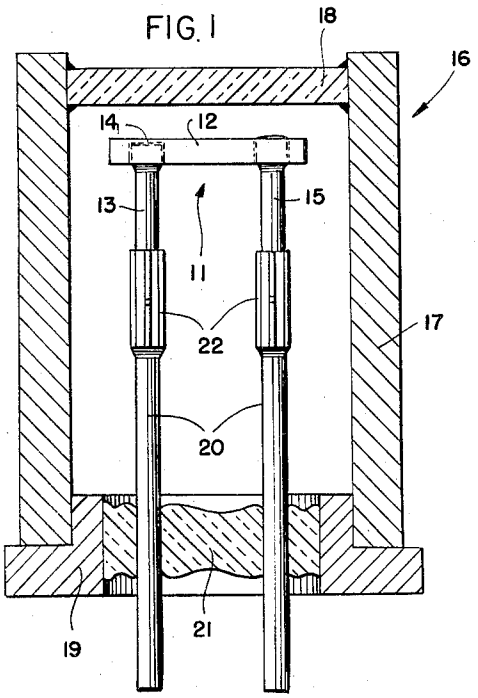


FIG. 2

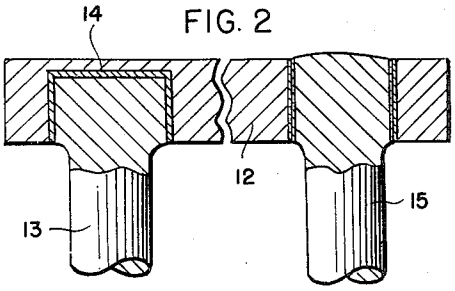


FIG. 3

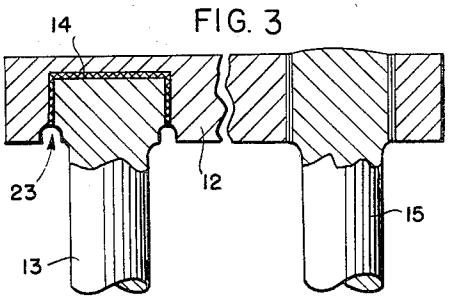


INVENTOR:—
BERND ROSS

BY:—
Marzall, Johnston, Cook & Root

ATTORNEYS

United States Patent Office

2,862,160

Patented Nov. 25, 1958

1

2,862,160

# LIGHT SENSITIVE DEVICE AND METHOD OF MAKING THE SAME

Bernd Ross, Chicago, Ill., assignor to Hoffmann Electronics Corporation, Los Angeles, Calif., a corporation of California

Application October 18, 1955, Serial No. 541,169

16 Claims. (Cl. 317—235)

The present invention relates, in general, to electronics and has more particular reference to photosensitive electron flow devices comprising semi-conductor material, the invention pertaining specifically to an improved photosensitive device embodying a P–N junction, said device being adaptable to function either as a photovoltaic cell for the production of electrical energy in response to the impingement of light rays thereon, or as a phototransitor device for the control of electrical current flow therein, in response to variations in the intensity of light applied to the device.

A semi-conductor material may comprise an intrinsic or pure substance, such as crystalline germanium, silicon or other suitable material, in which the valence ring electrons of the constituent atoms are tightly bound and hence unavailable for electrical conduction, the intrinsic material being doped or contaminated with an activating substance comprising atoms distributed in and forming an integral part of the lattice structure of the intrinsic material. The proportion of activating impurity to intrinsic material may be of the order of one impurity atom for each hundred million atoms of intrinsic material.

Suitable activating substances for activating intrinsic semi-conductor material comprise atoms containing either a greater or lesser number of valence electrons than the constituent atoms of the intrinsic material. Where the atoms of the activating substance comprise more valence electrons than are associated with the atoms of the intrinsic material, the excess electrons may circulate freely in and through the crystal structure of the semi-conductor material and are hence available for electrical conduction purposes. Activating substances which provide excess electrons are commonly referred to as electron donors since they supply electrons which are free to move within the lattice structure of the semi-conductor material. Excess electron semi-conductors are commonly referred to as comprising N-type material since electrical conduction is carried on by the flow of negatively charged electrons through the material.

Where the atoms of the activating substance embody fewer valence electrons than are associated with the atoms of the intrinsic substance, each atom of activating material must borrow electrons from an adjacent atom of the intrinsic material, thereby creating what may be referred to as a hole; that is to say, an incomplete group of atom bonding electrons simulating the properties of a positively charged electron in the lattice structure of the semi-conductor material. Hole creating activators are commonly called acceptor materials since they take up electrons from the surrounding atoms of the intrinsic material to form positive holes therein. Intrinsic material activated by an acceptor substance is commonly referred to as a P-type semi-conductor since conduction therein is effected by the movement of positive holes in the material.

Electrical energy may flow in either direction through both types of semi-conductor material. When, however, a body of P-type material is joined with a body of N-type

2

material to form therebetween what is commonly referred to as a P–N junction, the positive holes in the P-type material and the free electrons in the N-type material are mutually repelled away from the junction. In this connection, the P–N junction is the equivalent of a unidirectional potential source having negative and positive sides respectively connected with the P-type and N-type materials on opposite sides of the junction, thereby constituting the junction as a potential hill, past which electrical energy may flow more easily in one direction than the other. If, for example, the positive and negative sides of a source of unidirectional electrical potential be connected respectively with the N-type and P-type ends of a P–N junction element, in fashion commonly referred to as reverse bias, such potential source will merely increase the potential hill, by drawing the valence electrons and holes mutually away from the junction, and, consequently no current flow may take place across the P–N junction.

On the other hand, connection of the positive and negative sides of a source of unidirectional electrical potential, as a so-called forward bias, respectively to the P-type and N-type sides of a P–N junction element, will tend to offset the potential hill by driving the holes of the P–type material and the electrons of the N-type material toward the junction, thereby allowing current flow across the junction if and when the applied potential exceeds the potential drop across the junction element, including the equivalent potential value of the junction hill. Accordingly, a semi-conductor element embodying a P–N junction may be employed as an electrical power rectifier.

Heretofore semi-conductor elements embodying P–N junctions have been produced by initially growing a crystal ingot of intrinsic material to desired size in the presence of an activator of one kind, an electron donor material, for example, to thereby constitute the resulting crystalline substance as N-type semi-conductor material. Thereafter growth of the crystal ingot may be continued in the presence of an activating substance of the other kind, such as an electron acceptor material, to thereby constitute the subsequently grown portions of the ingot as P-type material. In such an ingot, the P–N junction extends between the N-type and P-type portions of the ingot body.

Semi-conductor elements embodying P–N junctions may show photosensitive characteristics where a junction is disposed close to a surface adapted for exposure to light. When light impinges upon such junction adjacent surface of a semi-conductor element electron hole pairs will be created in the semi-conductor element at the surface upon which light is impinged, such hole pairs being initially under no electrical stress. The junction resistance is such that substantially all of the applied potential difference appears across the junction, there being little, if any, voltage drop across the junction forming bodies of semi-conductor material on opposite sides of the junction. As a consequence, the electron hole pairs created as the result of light applied to the element will diffuse through the semi-conductor material and some of them will come into the surface adjacent junction area. By so doing, the junction pairs lower the resistance of the junction area, at least temporarily, thereby causing current flow therein which will be directly proportional to the intensity of impinging light, since the number of hole pairs created will be a function of the amount of light applied to the semi-conductor element.

An important object of the present invention is to provide an improved photosensitive device of the character mentioned, and comprising a disc or plate of semi-conductor material in which are embedded the ends of wire-like rods of selected material, in order to provide ohmic,

or low resistance, connection between one of the rods and the plate of semi-conductor material, and to form a P–N junction between the semi-conductor material of the plate and another of said rods; a further object being to provide means for disposing the P–N junction in desired, precisely spaced relationship in the plate, inwardly of a light receiving surface of the plate; a further object being to provide for disposing a P–N junction in a body of semi-conducting material in precisely spaced relationship of the order of 1/10,000 of an inch inwardly of a light receiving surface of said body.

Another important object is to provide a photosensitive semi-conductor device comprising a plate or disc of silicon of selected type forming a body of semi-conductor material, and a wire-like rod of material of a different type and, having an end embedded in the material of said plate, on one side thereof, to form a P–N junction between the material of the plate and the embedded end of the wire-like rod, said junction being precisely spaced a desired distance inwardly of the opposite side of the plate; a further object being to employ a plate of N-type silicon in conjunction with a wire-like rod of P-type material, such as aluminum, or metal activated as with boron, aluminum, indium, or other electron acceptor substance; a still further object being to employ a plate of P-type silicon in conjunction with a wire-like rod of N-type material, such as gold, activated with antimony, arsenic, phosphorus, or other electron donor substance.

Another important object is to provide a photosensitive, semi-conductor device comprising a plate or disc of semi-conductor material, including means forming a P–N junction therein, and means forming an ohmic, or low resistance, connection with the body of semi-conductor material, whereby the same may be electrically interconnected in external circuitry; a still further object being to form such ohmic connection by embedding in said plate, in spaced relationship with respect to the junction, a wire-like rod of suitable electrical conducting material, capable of forming ohmic connection with the material of the plate; a further object being to form the ohmic connection by means of a wire-like rod of metal, such as gold, doped with an activating substance adapted to form ohmic connection with the material of the plate, such activating substance comprising antimony, arsenic, bismuth or other electron donor substance, where the plate comprises N-type semi-conductor material, such activating substance comprising boron, aluminum, indium, or other electron acceptor substance, where the plate comprises P-type semi-conductor material.

The foregoing and numerous other important objects, advantages and inherent functions of the invention will become apparent as the same is more fully understood from the following description, which, taken in connection with the accompanying drawings, discloses preferred embodiments of the invention.

Referring to the drawings:

Fig. 1 is a sectional view through a photosensitive semi-conductor device embodying the present invention;

Fig. 2 is an enlarged sectional view taken through portions of the device shown in Fig. 1; and

Fig. 3 is a sectional view similar to Fig. 2 and illustrating a modified form of device embodying the invention.

To illustrate the invention, the drawings show a photosensitive semi-conductor device **11** comprising a disc-like wafer, or plate **12**, of semi-conductor material of selected type, the wafer being operatively associated with a body of material **13** of unlike type, to thereby form a P–N junction **14** between the body **13** and the disc-like wafer **12**. The wafer **12** is also operatively associated with ohmic contact means **15**, forming low resistance electrical connection with the material of the wafer.

While the present invention is not necessarily limited or restricted to any particular semi-conducting material, it is preferable that the disc-like wafer or plate **12** be made



of silicon of desired type, the wafer or plate **12** preferably being relatively thin and having thickness of the order of five to fifteen mils; the plate **12** also preferably comprising N-type silicon, although plates of P-type silicon may be employed in producing devices embodying the invention, if desired. Where the plate or wafer **12** comprises N-type silicon, the body **13** may, and preferably does comprise a wire-like rod of aluminum, the same comprising P-type material forming the P–N junction **14** between the embedded end of the wire-like rod **13** and the surrounding N-type material of the wafer **12**. Where the wafer **12** comprises N-type silicon, the ohmic contact means **15** may comprise a wire-like rod of metal, such as gold, doped with electron donor material, such as antimony, arsenic, bismuth, phosphorus and the like, thereby constituting the wire-like rod **15** as N-type material providing a good ohmic contact or junction between the embedded end of the rod **15** and the material of the wafer **12**.

On the other hand, where the material of the wafer **12** comprises P-type silicon, the wire-like rod forming the body **13** may comprise N-type material, such as gold, doped with an electron donor material, such as antimony, arsenic, bismuth, phosphorus and the like, in order to form a P–N junction between the embedded end of the rod **13** and the surrounding material of the wafer. In such case, the ohmic contact means **15** may comprise a wire-like rod of P-type material, such as aluminum; or the rod may comprise gold doped with an electron acceptor material, such as boron, thallium, gallium, indium and the like, in order to form ohmic contact between the embedded end of the wire-like rod **15** and the surrounding material of the wafer.

In order to form the P–N junction **14** within the body of the plate or wafer **12**, in relatively closely spaced relation behind the front, or light receiving surface thereof, the wafer **12** may be placed upon a heating element which may comprise a ribbon of Nichrome electrically energized as a heater, at a temperature of the order of 800° C. After the wafer has been allowed to reach an equilibrium temperature, the wire-like rods **13** and **15** may be applied upon the back surface of the wafer, that is to say, the surface of the wafer opposite, or remote from its light receiving surface, thereby causing the same instantly to fuse and to alloy with the material of the wafer because of its high temperature. Thereafter, the wire-like rods may be pressed into the wafer a distance of the order of three to five mils, measured along the rods, to produce a sort of fillet thereon.

The rod **15**, especially where the same comprises gold, may penetrate completely through the wafer, and form a protrusion on the front side thereof. The other rod **13**, however, should be applied in such fashion as to stop short of the front surface of the wafer, thereby producing the desirable, extremely thin section of silicon between the end of the rod **13** and the adjacent front, or light receiving surface, of the wafer. The penetration of the rods **13** and **15** follows the internal, generally rectangular, crystalline configuration of the wafer. This crystalline habit can be described by stating that the wafer **12** is cut from a crystal ingot along parallel planes, extending in a direction such that the (III) plane of the crystalline structure is exposed in order to obtain an alloy configuration in which there will be a flat, planar junction extending parallel with respect to the light receiving surface of the wafer, for a device having optimum response characteristics.

The silicon wafer **12** with wire-like rods **13** and **15** attached thereto, as aforesaid, may be mounted within an enclosing housing **16** which may conveniently comprise an open ended sleeve **17** of metal such as Kovar, having a preferably glass disc **18** sealed as a windowpane, in position extending at one end of the sleeve **17**, said disc preferably comprising Corning No. 7052 glass, or other equivalent glass, that is readily sealable with the metal

forming the sleeve **17**, the disc **18** having thickness of the order of 20–30 mils. At its end remote from the disc **18**, the sleeve **17** may be weldingly, or otherwise sealingly, secured to a mounting collar **19** of Monel or like metal. The wafer **12** and the attached rods **13** and **15** may be supported in the housing **16** on mounting stems **20** preferably comprising metal such as Kovar, said stems being supported in spaced apart, parallel relationship, in position extending through the collar **19**, by means of a glass seal **21** surrounding and sealingly connected with said stems **20**, and extending in and sealing the collar **19**. The support stems **20** thus have end portions extending within the housing **16**, in position to be mechanically and electrically connected, respectively with the wafer attached rods **13** and **15**, said stems **20** also including end portions extending outwardly of the housing **16** through the glass seal **21** for electrical connection in external circuitry. The rods **13** and **15** may be mechanically and electrically connected with the stems **20** in coaxial alinement therewith, by means of so called staked connectors **22**. The wafer **12** may thus be mounted within the housing **16**, with the light receiving surface of the wafer disposed substantially parallel with respect to the windowpane disc **18** and immediately inwardly thereof, so as to be in position exposed to such light rays as may penetrate the window.

As a manufacturing expedient, it is preferable to assemble the wafer and housing by preforming the wafer with attached rods **13** and **15**, the sleeve **17** with window disc **18** sealed thereon, and the sleeve **19**, with mounting stems **20**, sealed thereto, each as a separate sub-assembly unit. The wafer and attached rods may then be secured to and electrically connected with the mounting stems **20**, after which the sleeve **17**, with attached window disc **18**, may be applied to the collar **19** and sealed thereto, in position enclosing the stem mounted wafer. The housing **17**, also, is preferably filled, either with an inert gas, such as nitrogen, or with an inert, optically transparent fluid, such as liquid silicone No. 200.

When used as a photovoltaic device, the application of incident light through the windowpane **18** and upon the light receiving surface of the wafer **12**, causes electron holes to appear at the exposed surface of the wafer, thereby causing a potential difference on opposite sides of the P–N junction **14**, which will cause a small current flow of the order of 200 microamperes through the junction, thereby producing a signal entirely capable of being amplified to any desired extent. The foregoing current flow will, of course, be directly proportional to the number of holes which appear at the light receiving surface of the wafer, the same in turn being proportional to the intensity at which light impinges thereon.

Devices made in accordance with the present invention may also serve as photosensitive diodes or rectifiers; but for optimum diode service, it is desirable that the wafer and the connected rods **13** and **15** be immersed in an acid capable of dissolving both silicon and aluminum in an etching process, in order to remove the surface layers of the wafer and of the aluminum rod, in order to expose the underlying material thereof. Such an etching process serves to remove surface dirt, oxidation, and other roughnesses which may produce leakage resistances on the surface of the silicon wafer. A combination, or mixture, of concentrated nitric and hydroflouric acids may be used to thus dissolve the surface portions of the silicon wafer and expose smooth, continuous and uncontaminated body material of the wafer. Peripherally of the aluminum wire **13**, where it joins with the material of the silicon wafer, the P–N junction forming alloy is not at all uniform, but may be contaminated with oxides, possibly also with nitrides, gas bubbles, and other unwanted matter. Such imperfections tend to impair the unidirectional current flow characteristics of the P–N junction. Immersion of the wafer **12**, including the portions thereof containing the P–N junction, in addition to desirably cleaning the remaining surfaces of the wafer, will also etch out those portions of the P–N junction **14**, at the edges thereof, which are exposed around the rod **13** at the junction thereof, with the material of the wafer, in the manner indicated at **23** in Fig. 3, so that the device may afford optimum rectifying characteristics.



In order to operate the device as a photosensitive, rectifying diode, a back voltage of selected intensity may be applied between the conductors **20**. In the absence of incident light upon the wafer, no current will flow through the device. As soon as light becomes incident upon the wafer **12**, however, electron hole pairs will be created at the light receiving surface of the wafer **12**. These hole pairs are initially under no electrical stress, the junction resistance being such that all of the potential difference applied between the conductors **20** will appear across the junction, and there will be no voltage drop across the silicon material of the wafer itself. As a consequence, the electron hole pairs will diffuse, rather than be forced in any particular direction; and they will, of course, diffuse into the junction area, providing it is disposed close to the light receiving surface of the wafer where the hole pairs are created. Upon becoming diffused into the junction area, the hole pairs tend to lower the resistance of the junction, temporarily, thereby permitting current flow therethrough, under the influence of the applied biasing potential. Such current flow will, of course, be directly proportional to the intensity of light incident upon the wafer, the same being directly proportional to the number of hole pairs thus created. When used as a diode with a bias potential applied across the junction, the device is substantially more sensitive than where its photovoltaic characteristics are utilized, since, when the device is employed as a diode, incident light is used as a trigger; but incident light serves as an energy source when the photovoltaic characteristics of the device are utilized.

The immersion of the wafer **12** and attached rods **13** and **15** in acid, in order to condition the same for use as a photosensitive diode, may be conveniently accomplished after the wafer and rods have been mechanically and electrically attached on the supporting stems **20**. In order to protect the stems **20** and the collar **19**, as well as the staked connectors **22** against the etching acid or fumes thereof, during the etching process, it is preferable that the collar **19**, the stems **20** and the staked connectors **22** be plated with a thin film of gold, which will not only resist such fumes of the etching acid as may reach said components, but will also materially assist in the formation of soldered connections between the stems **20** and the staked connectors **22**, and between said connectors and the rods **13** and **15**. In this connection, the stems **20** are preferably completely coated with gold from end to end, since the same facilitates electrical connection in external circuitry of the ends of said stems which extend outwardly of the housing **16**, such electrical connection being relatively hard to accomplish with uncoated Kovar metal rods, which oxidize readily and hence become difficultly solderable.

It is thought that the invention and its numerous attendant advantages will be fully understood from the foregoing description, and it is obvious that numerous changes may be made in the form, construction and arrangement of the several parts without departing from the spirit and scope of the invention, or sacrificing any of its attendant advantages, the forms herein disclosed being preferred embodiments for the purpose of illustrating the invention.

The invention is hereby claimed as follows:

1. A photosensitive electron flow device comprising a body of crystalline, semi-conductor material, and a wire-like rod of unlike material, having an end embedded in said body to form a P–N junction between the material of the body and of said rod, said rod having a relatively

flat portion extending immediately behind and closely spaced with respect to a light receptive bounding surface of said body.

2. A photosensitive electron flow device comprising a body of N-type semi-conductor material, and a wire-like rod of P-type material, having an end embedded in said body to form a P–N junction between the material of the body and of said rod, said rod having a relatively flat portion extending immediately behind and closely spaced with respect to a light receptive bounding surface of said body.

3. A photosensitive electron flow device comprising a body of P-type semi-conductor material, and a wire-like rod of N-type material, having an end embedded in said body to form a P–N junction between the material of the body and of said rod. Said rod having a relatively flat portion extending immediately behind and closely spaced with respect to a light receptive bounding surface of said body.

4. A photosensitive electron flow device comprising a body of silicon, activated as a semi-conductor material of selected type, and a wire-like rod of material of unlike type, having an end embedded in said body to form a P–N junction between the silicon material of said body and the material of said rod, said rod having a relatively flat portion extending immediately behind and closely spaced with respect to a light receptive bounding surface of said body.

5. A photosensitive electron flow device comprising a body of silicon, activated as N-type, semi-conductor material, and a wire-like rod of P-type material, having an end embedded in said body to form a P–N junction between the silicon material of said body and the material of said rod, said rod having a relatively flat portion extending immediately behind and closely spaced with respect to a light receptive bounding surface of said body.

6. A photosensitive electron flow device comprising a body of silicon, activated as N-type, semi-conductor material, and a wire-like rod of aluminum, or other P-type material, having an end embedded in said body to form a P–N junction between the material of the body and of said rod, said rod having a relatively flat portion extending immediately behind and closely spaced with respect to a light receptive bounding surface of said body.

7. A photosensitive electron flow device comprising a body of silicon, activated as P-type, semi-conductor material, and a wire-like rod of N-type material, having an end embedded in said body to form a P–N junction between the material of the body and of said rod, said rod having a relatively flat portion extending immediately behind and closely spaced with respect to a light receptive bounding surface of said body.

8. A photosensitive electron flow device comprising a body of silicon, activated as P-type, semi-conductor material, and a wire-like rod of N-type metal, such as gold, doped with an electron donor substance, such as antimony, arsenic, bismuth and phosphorus, said rod having an end embedded in said body to form a P–N junction between the material of the body and of said rod, said rod having a relatively flat portion extending immediately behind and closely spaced with respect to a light receptive bounding surface of said body.

9. A photosensitive electron flow device comprising a plate of crystalline, semi-conductor material, and a wire-like rod of unlike material, having an end embedded in said plate, on one side thereof, to form a P–N junction between the material of the plate and of said rod, the terminal portions of said embedded end extending in a relatively flat plane, defining said P–N junction immediately behind and closely spaced with respect to a light receptive bounding surface defining the opposite side of said body.

10. A photosensitive electron flow device comprising a body of crystalline, semi-conductor material, a wire-like rod of unlike material, having an end embedded in said body to form a P–N junction between the material of the body and of said rod, the embedded end of said rod having a relatively flat portion extending immediately behind and closely spaced with respect to a light receptive bounding surface of said body, and a wire-like rod of compatible material embedded in said body in manner forming ohmic contact therewith.



11. A photosensitive electron flow device comprising a plate of crystalline, semi-conductor material, and a pair of wire-like rods, having ends embedded to accurately selected depths in said plate on one side thereof, such that the embedded end of said one rod extends immediately behind and is closely spaced with respect to a light receptive bounding surface of said plate, said one rod comprising a junction rod made of material unlike that of the plate, thereby forming a P–N junction between the material of the plate and of the rod, the other rod comprising a connection rod made of material compatible with that of the plate, thereby forming ohmic contact therewith.

12. A photosensitive electron flow device comprising a plate of crystalline, semi-conductor material, and a pair of wire-like rods, having ends embedded to accurately selected depths in said plate on one side thereof, one of said rods comprising a junction rod made of material unlike that of the plate, thereby forming a P–N junction between the material of the plate and of the rod, the other rod comprising a connection rod made of material compatible with that of the plate, thereby forming ohmic contact means forming a sealed housing enclosing said plate and attached rods, said housing having a light transmitting window opposite said plate, and means for electrically connecting said rods in electrical circuitry outwardly of said housing.

13. A photosensitive electron flow device comprising a plate of crystalline, semi-conductor material, and a pair of wire-like rods, having ends embedded to accurately selected depths in said plate on one side thereof, one of said rods comprising a junction rod made of material unlike that of the plate, thereby forming a P–N junction between the material of the plate and of the rod, the other rod comprising a connection rod made of material compatible with that of the plate, thereby forming ohmic contact therewith, and means for enveloping said plate and said rods in an inert fluid substance.

14. A photosensitive electron flow device, as set forth in claim 13, wherein the plate and attached rods are immersed in nitrogen gas, or a liquid silicone.

15. A photosensitive electron flow device, as set forth in claim 13, wherein the body, or plate, and the attached wire-like rods are mounted upon support means comprising a pair of stems of Kovar metal carried in spaced, and relatively insulated, position upon a mounting surface, said stems being coated with a thin film of gold, and being electrically and mechanically connected with said wire-like rods.

16. A photosensitive electron flow device, as set forth in claim 13, wherein the surface portions of the body or plate and of the rods, especially at the exposed portions of the P–N junction, are etched with acid to condition the device for use as a rectifying diode.


References Cited in the file of this patent

UNITED STATES PATENTS

| | | |
|---|---|---|
| 2,646,536 | Benzer et al. | July 21, 1953 |
| 2,654,059 | Shockley | Sept. 29, 1953 |
| 2,736,847 | Barnes | Feb. 28, 1956 |
| 2,748,325 | Jenny | May 29, 1956 |
| 2,750,542 | Armstrong et al. | June 12, 1956 |
| 2,792,538 | Pfann | May 14, 1957 |
| 2,794,846 | Fuller | June 4, 1957 |

FOREIGN PATENTS

| | | |
|---|---|---|
| 1,038,658 | France | Mar. 13, 1953 |

# UNITED STATES PATENT OFFICE

## CERTIFICATE OF CORRECTION

Patent No. 2,862,160 November 25, 1958

Bernd Ross

It is hereby certified that error appears in the above numbered patent requiring correction and that the said Letters Patent should read as corrected below.

In the grant, lines 2 and 12, and in the heading to the printed specification, lines 4 and 5, name of assignee, for "Hoffmann Electronics Corporation", each occurrence, read -- Hoffman Electronics Corporation --.

Signed and sealed this 12th day of May 1959.

(SEAL)
**Attest:**

KARL H. AXLINE
**Attesting Officer**

**ROBERT C. WATSON**
**Commissioner of Patents**