Nov. 3, 1959 P. P. SMITH 2,910,720

MACHINE FOR CLEANING RUGS AND THE LIKE

Filed June 22, 1954 3 Sheets-Sheet 1

Fig. 4

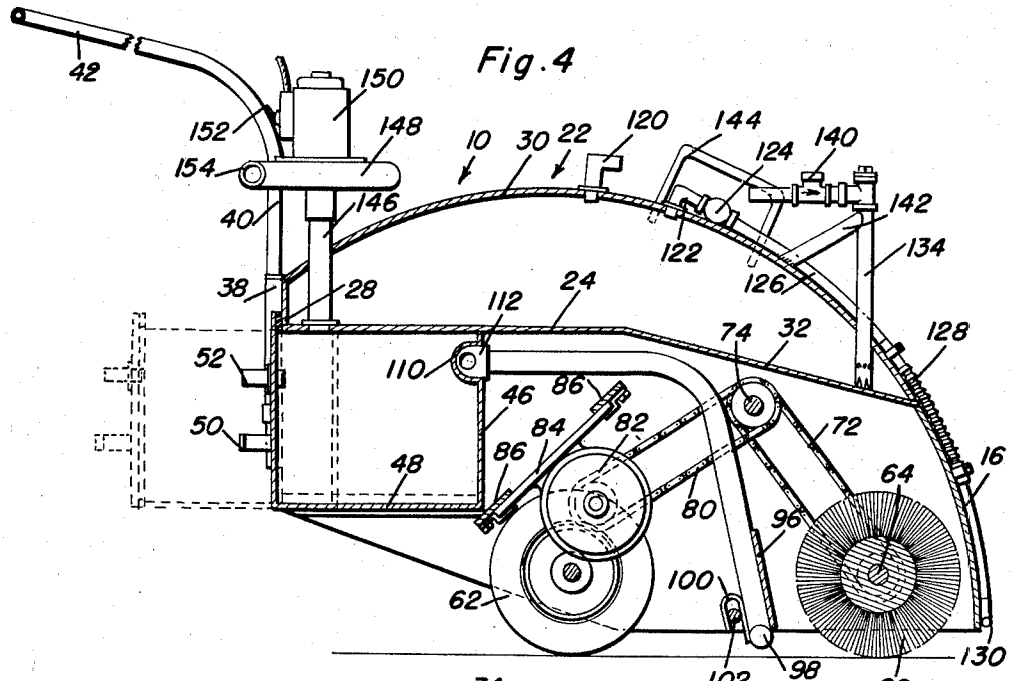

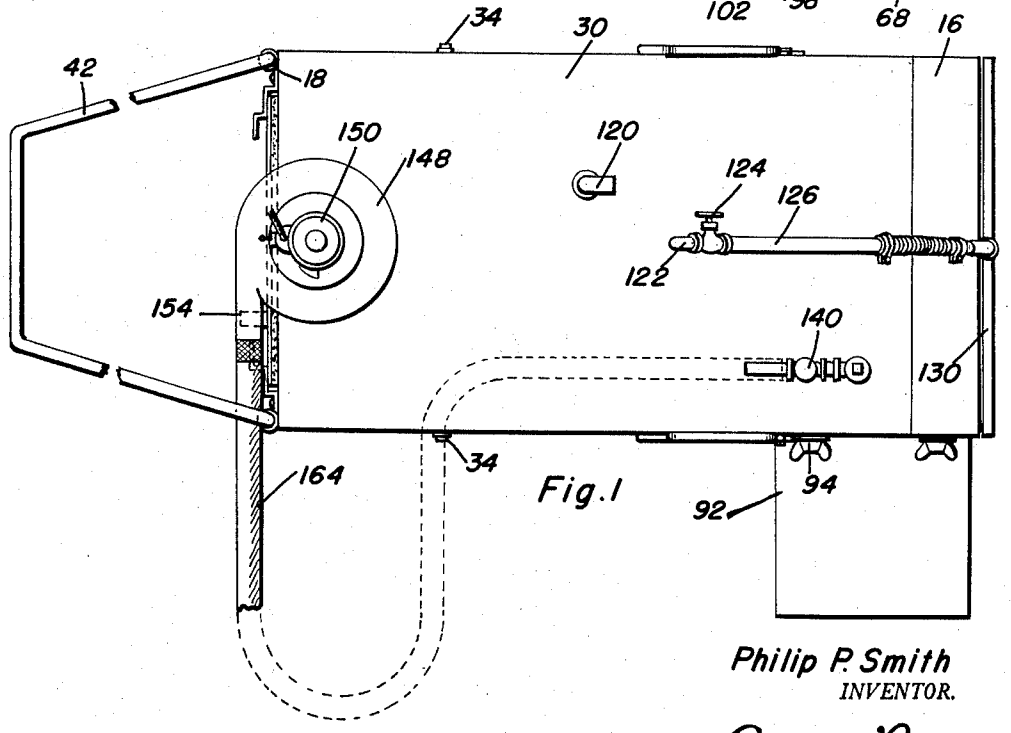

Fig. 1

Philip P. Smith
INVENTOR.

BY Clarence A. O'Brien and Harvey B. Jacobson
Attorneys

Nov. 3, 1959 P. P. SMITH 2,910,720

MACHINE FOR CLEANING RUGS AND THE LIKE

Filed June 22, 1954 3 Sheets-Sheet 2

Fig. 2

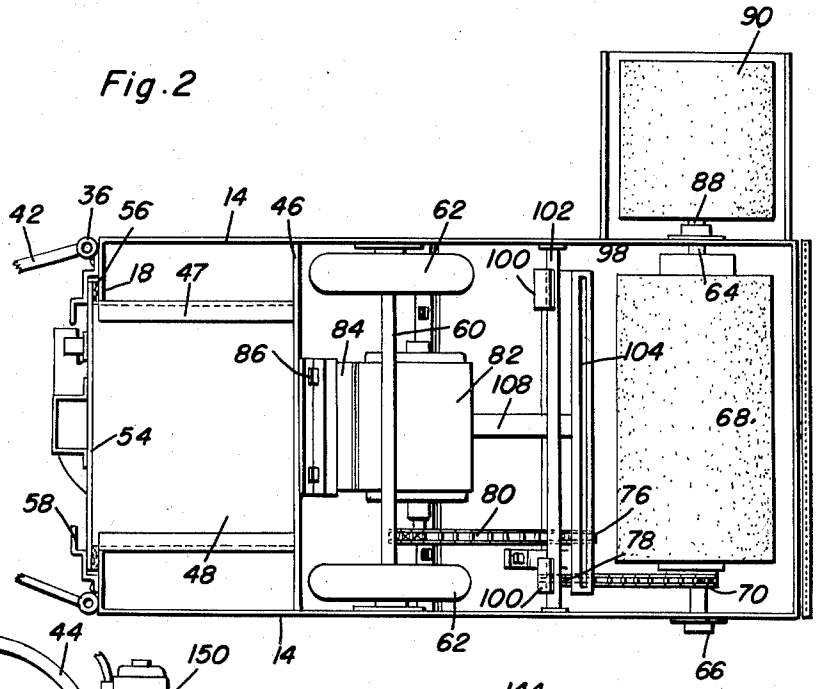

Fig. 3

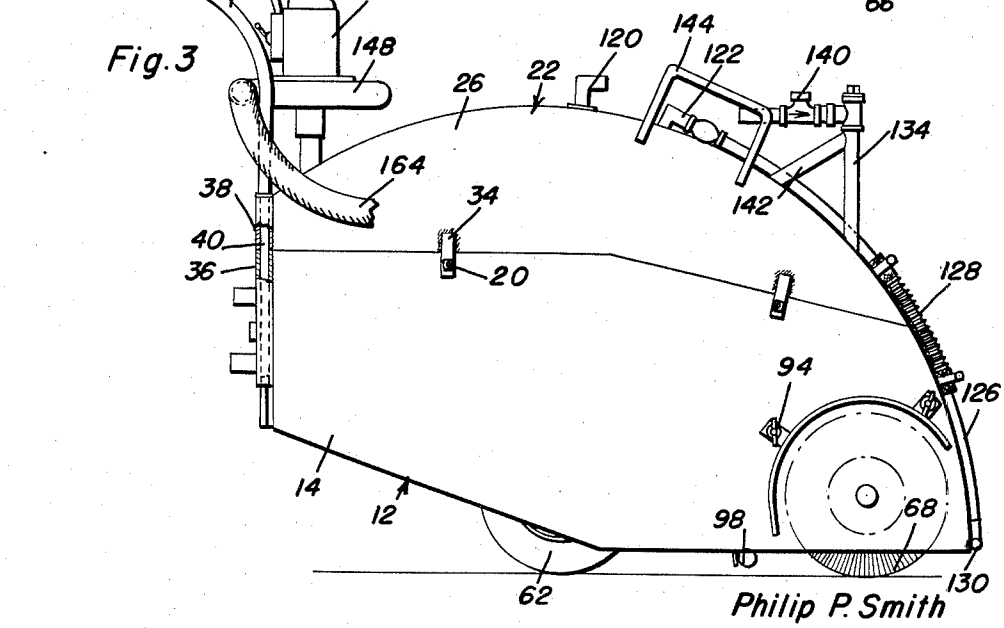

Fig. 12

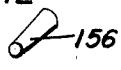

Philip P. Smith
INVENTOR.

BY Clarence A. O'Brien and Harvey B. Jacobson
Attorneys

Nov. 3, 1959 P. P. SMITH 2,910,720

MACHINE FOR CLEANING RUGS AND THE LIKE

Filed June 22, 1954 3 Sheets-Sheet 3

Fig. 11

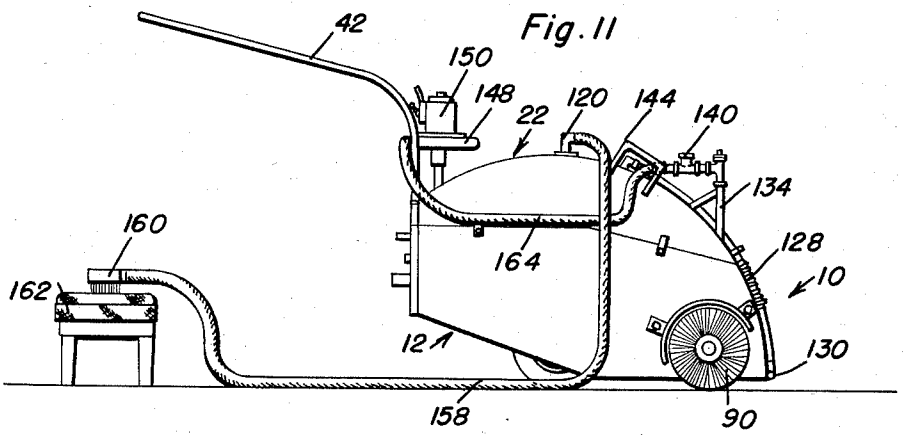

Fig. 5

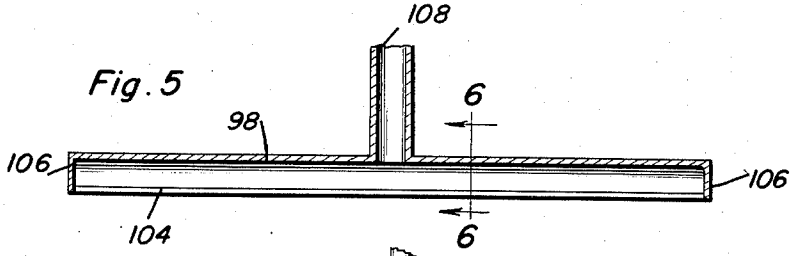

Fig. 6

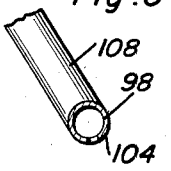

Fig. 7

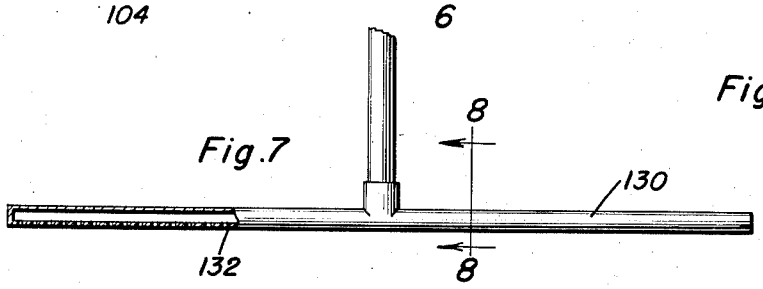

Fig. 8

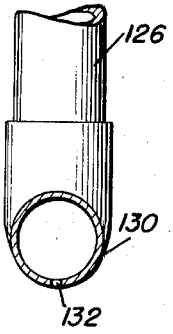

Fig. 9

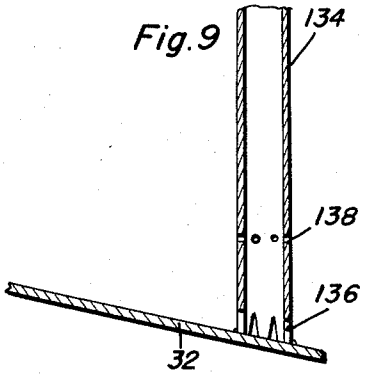

Fig. 10

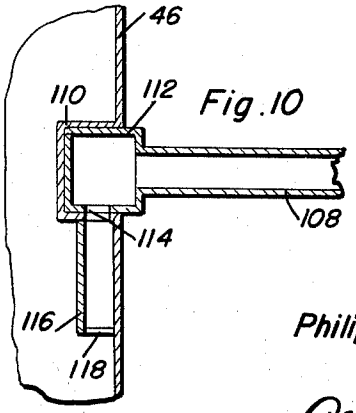

Philip P. Smith
INVENTOR.

BY Clarence A. O'Brien and Harvey B. Jacobson
Attorneys

United States Patent Office 2,910,720 Patented Nov. 3, 1959

2,910,720

MACHINE FOR CLEANING RUGS AND THE LIKE

Philip P. Smith, Panama City, Fla.

Application June 22, 1954, Serial No. 438,449

1 Claim. (Cl. 15—320)

This invention relates to a combination rug and upholstery sweeper, cleaner, dry washer and dyeing machine and more specifically provides a single machine for performing these functions.

An object of this invention is to provide a single machine for the above purposes that operates as one unit by a single operator thereby eliminating the separate operations and the machines necessary for the performance of the separate operations and separate operators for each machine.

Another important and new idea of this invention is to provide a mechanism which will instantly manufacture profuse dry suds, abnormally inflated with air, and blown by compression to the surface of a rug or furniture to be cleaned thereby eliminating all water cleansing of such a surface.

Another object of this invention is to provide a machine as set forth above that may be utilized for cleaning carpeting or upholstery without removing it from its location in which suction is provided for removing lint and dirt present on the surface of the rug or upholstery and whereby the dirt or grit is disposed in a separation chamber provided therefor and thus may be disposed of in a convenient manner.

Yet another object of this invention is to provide a machine which will dispense soap suds onto the surface of a floor, rug or upholstery whereby the surface is left substantially dry.

Yet another important feature of the present invention is to provide a unitary and self-contained machine as described hereinafter which may be operated by a single person, is compact, simple in construction, easy to use, efficient in operation, universal in utility, well adapted for its several intended purposes and relatively inexpensive to manufacture and maintain.

These together with other objects and advantages which will become subsequently apparent reside in the details of construction and operation as more fully hereinafter described and claimed, reference being had to the accompanying drawings forming a part hereof, wherein like numerals refer to like parts throughout, and in which:

Figure 1 is a top plan view of the machine of the present invention;

Figure 2 is a bottom plan view of the machine showing the details of construction of the brushes together with the propelling motor and the supporting wheels;

Figure 3 is a side elevational view showing the machine of the present invention;

Figure 4 is a longitudinal, vertical sectional view taken substantially along a longitudinal section line passing through the center of the machine showing the details of construction thereof;

Figure 5 is a detailed sectional view showing the construction of the vacuum manifold which removes dirt from the surface to be cleaned;

Figure 6 is a detailed, transverse section taken substantially along section line 6—6 of Figure 5 showing the construction of the vacuum manifold;

Figure 7 is a detailed view partially in section showing the construction of the soap suds dispenser positioned forwardly of the rotating brush;

Figure 8 is a detailed, transverse sectional view taken substantially along section line 8—8 of Figure 7 showing the details of construction of the soap dispenser;

Figure 9 is a detailed, sectional view showing the construction of the soap solution agitator whereby the water and soap will be agitated by air discharged from the pipe and mixed therewith;

Figure 10 is a transverse, sectional view showing the details of construction of the vacuum tube and the vacuum tank wall;

Figure 11 is a side elevational view showing the machine of the present invention utilized with a flexible hose for dispensing suds onto a piece of furniture; and

Figure 12 is a perspective view of the rubber stopper that may be utilized in the L-shaped discharge pipe in the cleaning solution tank when the device is used except in the manner as illustrated in Figure 11.

Referring now specifically to the drawings, the combination rug and upholstery sweeper, cleaner, and dry washer machine is generally indicated by the numeral 10. The machine 10 includes a frame generally indicated by the numeral 12 and formed by vertically disposed side walls 14, an arcuately curved end wall 16 and a rear wall 18 thereby forming a hollow enclosure.

The side walls 14 of the frame 12 are provided with a plurality of projections 20 for retaining a tank 22 on the upper edges of the enclosure forming the frame 12. The tank 22 includes a bottom 24, side walls 26, an end wall 28 at one end thereof and an arcuate upper wall 30 which forms a top and forward end. The bottom 24 is provided with a horizontal section and a downwardly inclined section as indicated by the numeral 32 for a purpose described hereinafter. The tank 22 is removably attached to the enclosure forming the frame 12 by guide members 34 which engage the projections 20 for guiding and retaining the tank 22 on the frame. The rear wall 28 of the tank 22 and the rear wall 18 of the frame 12 are each provided with aligned tubular members 36 and 38 for slidably receiving the vertical portion 40 of a U-shaped handle having a right angle bend 44 wherein the vertical portion 40 is inserted in the aligned tubular members 36 and 38 thereby retaining the tank 22 in aligned position on the frame 12, wherein the side walls 14 and 26 are aligned and the rear walls 28 and 18 are aligned and the arcuate front wall 16 of the frame 12 and the arcuate upper wall 30 of the tank 22 are continuations of each other.

Referring now specifically to Figures 2 and 4, it will be seen that a vertical wall 46 is provided between the side walls 14 of the frame 12 and a pair of longitudinal members 47 of angle iron is disposed between the vertical wall 46 and the rear wall 18 for slidably receiving a drawer-type container 48 having a handle 50 on the outer surface thereof for manipulation of the container 48. A tube 52 projects through the rear wall 54 of the container 48 and the peripheral edge of the rear wall 54 is provided with a sealing gasket 56 for sealing the container 48 in the opening in the rear wall 18 of the frame 12. A pair of stepped latch members 58 are pivotally mounted at each side of the periphery of the rear wall 54 wherein the container 48 will be retained on the longitudinal members 47 and the sealing gasket 56 is securely positioned against the periphery of the opening in the rear wall 18 of the frame 12 thereby securing the container 48 in the frame 12 in airtight condition due to the engagement of one of the steps of the latch members with the outer surface of the wall 54.

Referring now specifically to Figure 2 and 4, it will be seen that a transverse axle 60 is disposed between the

side walls 14 adjacent the lower center portion thereof and a rotatable supporting wheel 62 is positioned adjacent each end of shaft 60 wherein the machine 10 may be moved over a supporting surface as desired. Forwardly of the shaft 60 is another transverse shaft 64 mounted in suitable bearings 66 and supporting a cylindrical brush 68. One end of the shaft 64 is provided with a sprocket gear 70 for engagement with a sprocket chain 72 that is driven through a lay shaft 74 having chain sprockets 76 and 78 thereon with the chain sprocket 76 being driven through a chain 80 from an electric motor 82 whereby the brush 68 will be rotated by operation of the motor 82. The motor 82 is mounted on a base plate 84 secured to the side walls and the vertical wall by suitable brackets 86. Suitable electrical power is supplied to the motor 82 through a suitable switch wherein the rotation of the brush 68 may be controlled. Positioned on one end of the transverse shaft 64 is an extension shaft 88 having an extension brush 90 mounted thereon and an arcuate shield 92 is positioned over the extension brush 90 by suitable fastening means 94.

A transverse baffle plate 96 is secured between the side members 14 rearwardly of the rotating brush 68 and a transverse pipe 98 having hooks 100 on the ends thereof is positioned rearwardly of the baffle plate 96 with the hooks engaging over a transverse rod 102 for support of the transverse pipe 98. As shown in Figure 5, the transverse pipe 98 is provided with an elongated slot 104 adjacent its bottom and is provided with closed ends 106 and a pipe 108 is in communication therewith and extends rearwardly into a recess 110 in the vertical wall 46 at the forward portion of the container 48.

As specifically illustrated in Figure 10, the recess 110 in the wall 46 receives an enlarged portion 112 of the pipe 108 and the recess 110 and the enlarged portion 112 are provided with aligned apertures 114 in communication with a discharge tube 116 having an opening 118 therein, whereby the material cleaned from the rug by the vacuum pipe 98 will be discharged into the interior of the container 48 and the material will have to change directions whereby the solid particles will be deposited at the bottom of the container 48 by the action of gravity.

The tank 22 is provided with an L-shaped pipe 120 adjacent the central portion of its upper surface and a second L-shaped pipe 122 is positioned at the upper surface 30 of the tank 22 and is connected through a valve 124 to a conduit 126 having a removable accordion type rubber hose portion 128 for connection with a transverse manifold 130. As illustrated in Figure 7, the manifold 130 is provided with a plurality of discharge apertures 132 for dispensing soap suds and the like forwardly of the brush 68. A vertical stand pipe 134 extends through the arcuate upper portion 30 of the tank 22 and terminates adjacent the lowest portion of the downwardly inclined bottom wall 32. As shown in Figure 9, the vertical pipe 134 is provided with a plurality of V-shaped notches 136 at its lower end and a plurality of apertures 138 spaced slightly therefrom for purposes described hereinafter. A check valve 140 is positioned in the inlet line for the conduit 134. Suitable braces 142 may be provided for anchoring stand pipe 134 and handle members 144 may be provided for lifting and manipulating the tank 22. At the rear portion of the tank 22 is another vertical pipe 146 which extends through the tank 22 and is in communication with the interior of the container 48. The pipe 146 is secured to the central inlet portion of a centrifugal type blower 148 driven by a suitable electric motor 150 with a switch 152 thereon for controlling operation of the motor 150 and blower 148 and a discharge nozzle 154 is provided on the blower 148 for discharge of the air therefrom.

As illustrated in Figure 12, a tapered rubber stopper 156 is provided for use in the L-shaped pipe 120 during use of the device at certain times. As illustrated in Figure 11, an elongated flexible hose 158 may be provided with a suitable discharge brush 160 for discharging soap suds or the like onto a piece of furniture such as the stool or chair 162 in a manner described hereinafter.

The operation of the device will be readily understood. Water and suitable soap are positioned within the tank 22 by any conventional filling means and the discharge nozzle 154 of the blower 148 is connected to the inlet side of the check valve 140 by any suitable flexible hose 164. Air will be discharged through the hose 164 down through the pipe 134 and out through the notches 136 and apertures 138 thereby agitating the water and soap mixture which is positioned substantially at the forward end of the tank 22 due to the particular construction of the downwardly sloping bottom portion 32. This agitation caused by the discharged air from the blower 148 will form a mixture of soap suds which will be discharged through the conduit 126 into the transverse manifold 130 and then onto the rug or other surface to be cleaned. The rotating brush 68 will thoroughly scrub the material to be cleaned and the vacuum attachment 98 will pick up all lint, dirt and excess suds thereby leaving the material that was cleaned in substantially a dry condition. The inlet of the blower 148 is in communication with the vacuum pipe 98 through the container 48 wherein the solid material will be deposited in the container 48 thereby effectively cleaning a rug or the like. When the device is used in this manner, the plug 156 is provided for insertion in the L-shaped pipe 120. When it is desired to utilize the device as shown in Figure 11 for cleaning upholstery, the valve 124 is closed and the flexible conduit 158 is connected to the L-shaped member 120 and the soap suds will be discharged through the discharge brush 160 in an obvious manner. The water content of the suds may be easily changed by changing the mixture and suitable colors may be added to the water for dyeing the rugs or other material as they are being cleaned.

Obviously, this device may be used as a vacuum cleaner without utilizing the suds so that the brush 68 will act as a sweeper.

From the foregoing, the construction and operation of the device will be readily understood and further explanation is believed to be unnecessary. However, since numerous modifications and changes will readily occur to those skilled in the art, it is not desired to limit the invention to the exact construction shown and described, and accordingly, all suitable modifications and equivalents may be resorted to, falling within the scope of the appended claim.

What is claimed as new is as follows:

A machine of the class described comprising a frame forming a hollow enclosure, a transverse brush rotatably journaled on said frame for contact with a surface to be cleaned, a closed tank mounted on the frame and having a sloping bottom wall for receiving cleaning mixture, an air inlet pipe extending downwardly into said tank, said pipe having a plurality of notches at the lower end thereof with the lower end engaging the bottom wall of the tank adjacent the lowest point thereof, said tank having a discharge opening in the top thereof, an air blower having a discharge connected solely to the pipe for for forcing air into the tank through the notches in the pipe for agitating the cleaning mixture contained in the tank and mixing air therewith for forming suds whereby the suds will be discharged through the discharge opening, means guiding the suds discharged through the discharge opening onto a surface to be cleaned forwardly of the brush, supporting wheels mounted on said frame, power means on said frame for driving said brush, a transverse vacuum manifold disposed rearwardly of the brush, an elongated slot in said manifold for collecting dirt and suds from the surface to be cleaned after the dirt has been loosened by the brush, said air blower being mounted on said frame, means interconnecting said manifold and the intake of

the air blower for providing a suction in said vacuum manifold, said means interconnecting the vacuum manifold and the intake of the air blower including a separation chamber for removing dirt entrained in the air, and a removable container in said chamber for receiving the dirt thereby permitting disposal of the dirt removed from the surface being cleaned.

References Cited in the file of this patent

UNITED STATES PATENTS

918,896	Noe	Apr. 20, 1909
1,711,380	Giampolini	Apr. 30, 1929
1,910,727	Walter	May 23, 1933
2,100,806	Kern	Nov. 30, 1937
2,137,729	Schellenburg	Nov. 22, 1938
2,198,322	Von Schrader	Apr. 23, 1940
2,293,722	Erickson	Aug. 25, 1942
2,334,914	Erickson	Nov. 23, 1943

FOREIGN PATENTS

83,257	Germany	Sept. 19, 1895
676,158	Germany	May 27, 1939