April 11, 1944. F. B. SCHAFFER 2,346,617

GOLF CLUB

Filed July 24, 1942

Fig. 1.

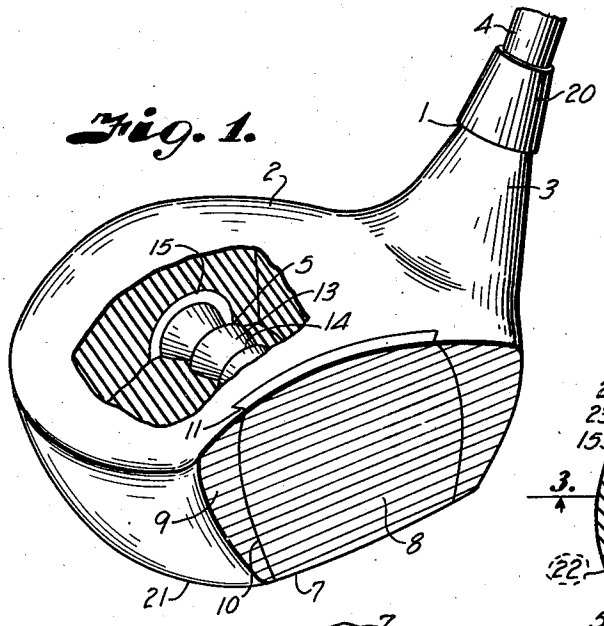

Fig. 2.

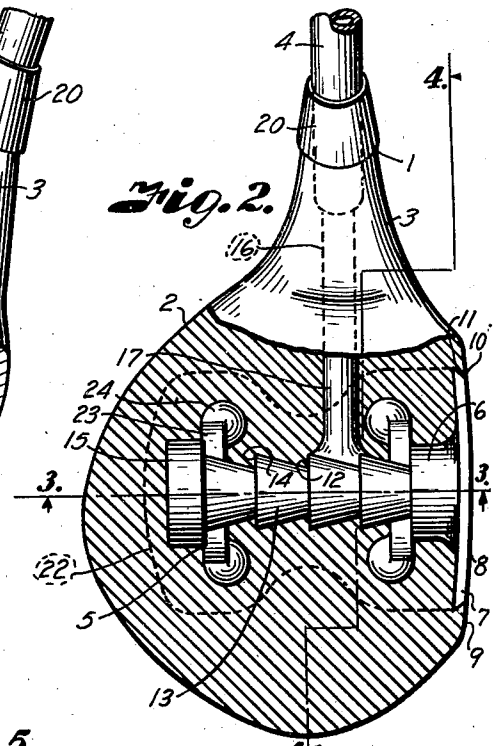

Fig. 5.

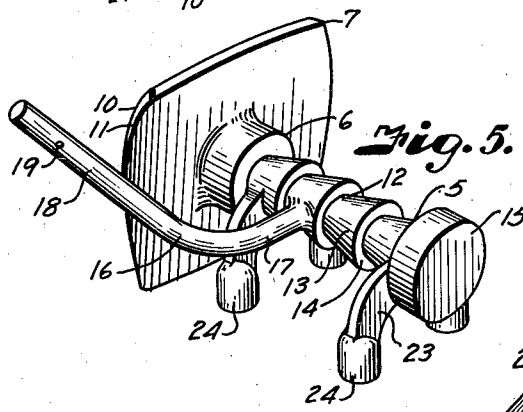

Fig. 4.

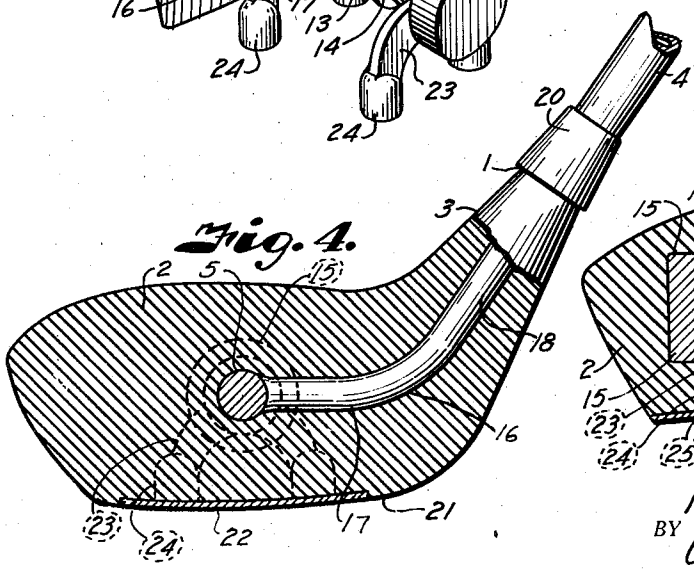

Fig. 3.

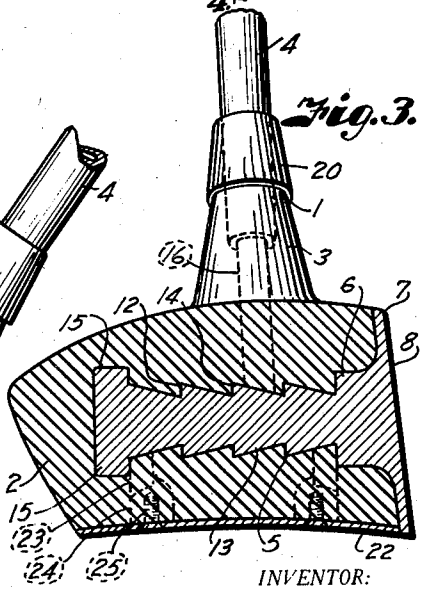

INVENTOR:
Fred B. Schaffer.
BY Arthur C. Brown.
ATTORNEYS.

Patented Apr. 11, 1944 2,346,617

UNITED STATES PATENT OFFICE

2,346,617

GOLF CLUB

Fred B. Schaffer, Kansas City, Mo.

Application July 24, 1942, Serial No. 452,183

11 Claims. (Cl. 273—77)

This invention relates to golf clubs, and more particularly to a head for the type of club heretofore known as a "wood," the principal object of the invention being to provide a golf club in which the principal weight of the head is directly behind the ideal point of impact of the club with the ball.

Other objects of the invention are to integrate the striking face and weight member of a club head whereby the full effect of the intertia of the weight is imparted to the ball; to directly connect the weighting core of a club head and the club shaft; to provide a club head adapted to be molded of plastic material; to provide a club head adapted for use of transparent or translucent material in the construction thereof; to provide a club head having a weighting core in a plastic head; to provide a core for a plastic club head adapted to hold the plastic material in place; to provide for attaching a sole foot plate directly to the club head core; to provide a club head adapted to be molded around a cast core; to provide a club head which requires a minimum of finishing or machining; to provide a club head which is simple in construction, reliable, efficient and practically indestructible, strong, durable, and economical to manufacture in a proper shape and balance; and to provide improved elements and arrangements thereof in a golf club head of the character described.

In accomplishing these and other objects of the present invention I have provided improved details of structure, the preferred form of which is illustrated in the accompanying drawing, wherein:

Fig. 1 is a perspective view of a golf club head embodying the present invention, portions of the head being broken away to show the core.

Fig. 2 is a horizontal section through the club head showing an integral striking face, core and shaft connection.

Fig. 3 is a transverse sectional view through the club head on the line 3—3, Fig. 2.

Fig. 4 is a longitudinal sectional view through the club head on the line 4—4, Fig. 2.

Fig. 5 is a perspective view of the integral striking face, core and shaft connection casting.

Referring more in detail to the drawing:

1 designates a golf club embodying the features of the present invention, which preferably consists of a head 2, shank 3 and shaft 4. The head is preferably molded or otherwise formed of plastic material such as pyralin, cellulose acetate, cellulose nitrate, or other similar plastic compound which will give a translucent, transparent or variegated color effect and is preferably molded around a core 5 of brass or other suitable metal of such size and weight as to provide the proper weight in the club head and of such shape as to balance and increase the driving force of the club.

The core 5 preferably consists of a cylindrical member 6, cast integrally and centrally located on the rear face of a striking plate 7, having a front striking face 8 adapted to be flush with the face 9 of the plastic portion of the club head 2. The striking face preferably has curved side edges 10 beveled to provide a wider rear dimension to effect a dovetailing between the plate and the club, as at 11, to assist in holding the plate in proper position on the club head. The cylindrical portion 6 extends rearwardly of the plate 7 a substantial distance through the club head and is provided with grooves 12 diverging rearwardly and outwardly to form central conical portions 13 and shoulder portions 14 adapted to be engaged by the plastic material of the head 2 and to aid in holding the plastic material and core and prevent any dislodgment thereof. The rear portion of the core is preferably enlarged, as at 15, to form a suitable weighting mass at the rear of the mass of the club to increase the driving force and to properly balance the weight thereof.

Connected to and integral with the side of the cylindrical core is a rod connection member 16 which extends laterally as at 17 and upwardly as at 18, through the shank 3 of the club head for connection with the shaft 4 as by a pin (not shown) extending through an opening 19 in the rod connection member 16, or by any other suitable connection or connecting means. The point of connection ad the end of the shank are preferably covered by a suitable ferrule 20, as in conventional practice. The shaft 4 and the member 16 which is integral with the weighting core and striking plate cause the full force of the swing and inertia of the weight and club to be delivered directly behind the point of impact between the club striking face and the ball to increase the driving force delivered thereto.

It is preferable that the sole 21 of the club be provided with a sole or foot plate 22 and that said plate be connected to the metal core 5 of the club to prevent any possible splitting of the plastic material and to maintain all of the metal weight of the club in one connected mass. Therefore the core is provided with downwardly projecting arms 23, carrying bosses 24 at the lower ends thereof adapted to engage the upper surface of the plate 22 and be connected thereto by a screw 25 or the like. The sole plate is flush with the sole of the club head and said sole plate may be mounted on the core prior to the placing of the core in a mold and forming the plastic material of the head around the mold. The mold may also be suitably formed to provide a recess for the sole plate whereby said sole plate may be attached to the club after molding. It

is evident that the sole plate may be cast as a part of the core and striking plate if desired.

In assembling a golf club constructed as described, the striking plate, core and connecting member 16 are preferably molded and cast as one integral casting; that the shaft 4 may be connected to the rod member 16 by any suitable connection means; and that the plate 22 may be connected to the bosses 24 by the screws 25. The assembled core, shaft and sole plate are then placed in a suitable mold and a suitable plastic material, such as cellulose nitrate, or the like, is formed around the core in the shape of a conventional golf club "wood," such as a driver, brassie, spoon, etc. The formation of the plastic portion of the head may be by injection or other suitable plastic molding process. It is also contemplated that the head may be formed of laminated wood, shaped to fit the core and impregnated with plastic material without departing from the spirit of the invention.

After the club head is removed from the mold, the surface is in a finished condition and requires no polishing or the like. The joint between the shank 3 and the shaft 4 is covered with a ferrule 20 to make a completed club.

It is apparent, therefore, that the present invention provides a golf club structure which is reliable, practically indestructible, and adaptable to quantity manufacture in which a proper shape and balance for the club may be economically attained.

What I claim and desire to secure by Letters Patent is:

1. In a golf club, a head formed of molded plastic material, a metallic striking face plate on the forward wall of the head, a central projection extending rearwardly of the striking face plate into the head, a shaft forming a handle for said head, and a rod member integral with the central projection and extending laterally and upwardly through the head for connecting the central projection with said shaft.

2. In a golf club, a head formed of plastic material, a metallic striking face plate on the forward wall of the head, a central projection extending rearwardly of the striking face plate into the head, a shaft, a shank integral with the central projection connected with the shaft, a foot plate, and means for connecting said foot plate to the central projection.

3. In a golf club, a head, a metallic striking face plate on the head, a weight member formed integrally with said striking face plate and extending into the head member to balance same, a shaft forming a handle for said head, and a rod member rigidly connected with said weight member and extending laterally relatively to said weight member and through the head for connecting the weight member to the shaft.

4. In a golf club, a head, a metallic striking face plate on the head, a weight member formed integrally with said striking plate and extending into the head member to balance same, ribs on said weight member for engaging in grooves in the head to hold said weight and head together, downwardly extending bosses on said weight member, a foot plate, and means connecting said foot plate to said bosses on the weight member.

5. In a golf club, a head, a metallic striking face plate on the head, a weight member formed integrally with said striking plate and extending into the head member to balance same, a foot plate, means connecting said foot plate to said weight member, a shaft, and means on said weight member for connecting the weight member to the shaft.

6. In a golf club, a head, a face plate on the head, a weight member formed integrally with said face plate and extending into said head to balance same, an enlargement on the inner end of the weight member for aiding in balancing the club and increasing the driving force thereof, a foot plate, and means for connecting said foot plate to the weight member.

7. In a golf club, a head, a face plate on the head, a weight member formed integrally with said face plate and extending into said head to balance same, an enlargement on the inner end of the weight member for aiding in balancing the club and increasing the driving force thereof, a foot plate, means for connecting said foot plate to the weight member, a shaft, and a shank integral with the weight member connected to said shaft.

8. In a golf club, a head, a striking face plate on the head, a weight member having engagement with the rear of said striking face plate and extending rearwardly thereof into the head to balance same, a shaft forming a handle for said head, and a rod member on the weight member and extending laterally thereof through the head for connecting said weight member to the shaft.

9. In a golf club, a head, a metallic striking face plate on the head, a weight member formed integrally with said striking face plate and extending into the head member to balance same, a ribbed central portion on said weight member for engaging a grooved portion of the head to hold said weight and head together, an enlargement on the inner end of the weight member for aiding in balancing the club and increasing the driving force thereof, a shaft, and a rod member rigidly connected with said weight member and extending laterally thereof through the head for connecting the weight member to the shaft.

10. In a golf club, a head having a shank thereon, a metallic striking face plate on the head, a weight member formed integrally with said striking plate and extending into the head member to balance same, ribs on said weight member for engaging in grooves in the head to hold said weight member and head together, an enlargement on the inner end of the weight member for aiding in balancing the club and increasing the driving force thereof, a shaft forming a handle for the head, and a rod member formed integrally with said weight member and extending laterally thereof through the head and shank thereon for connecting the weight member to the shaft.

11. In a golf club, a head, a striking face on the head, a heel plate on the head, a weight member in the head in supporting relation to the face plate and the heel plate, said weight member balancing the club, a shaft forming a handle for said head, and a rod member having rigid connection with the weight member and extending laterally thereof through the head for connecting the weight member to the shaft.

FRED B. SCHAFFER.