(12) INTERNATIONAL APPLICATION PUBLISHED UNDER THE PATENT COOPERATION TREATY (PCT)

(19) World Intellectual Property Organization
International Bureau

PCT

(43) International Publication Date
18 May 2007 (18.05.2007)

(10) International Publication Number
WO 2007/056069 A1

(51) International Patent Classification:
H01L 27/146 (2006.01)

(21) International Application Number:
PCT/US2006/042829

(22) International Filing Date:
2 November 2006 (02.11.2006)

(25) Filing Language: English

(26) Publication Language: English

(30) Priority Data:
11/265,727 2 November 2005 (02.11.2005) US

(63) Related by continuation (CON) or continuation-in-part (CIP) to earlier application:
US 11/265,727 (CON)
Filed on 2 November 2005 (02.11.2005)

(71) Applicant *(for all designated States except US)*: **TESSERA, INC.** [US/US]; 3099 Orchard Drive, San Jose, CA 95134 (US).

(72) Inventors; and

(75) Inventors/Applicants *(for US only)*: **HUMPSTON, Giles** [GB/GB]; C/O TESSERA, INC., 3099 Orchard Drive, San Jose, CA 95134 (US). **HONER, Kenneth, Allen** [US/US]; C/O TESSERA, INC., 3099 Orchard Drive, San Jose, CA 95134 (US). **TUCKERMAN, David, B.** [US/US]; C/O TESSERA, INC., 3099 Orchard Drive, San Jose, CA 95134 (US).

(74) Agents: **MILLET, Marcus, J.** et al.; Lerner, David, Littenberg, Krumholz & Mentlik, LLP, 600 South Avenue West, Westfield, NJ 07090 (US).

(81) **Designated States** *(unless otherwise indicated, for every kind of national protection available)*: AE, AG, AL, AM, AT, AU, AZ, BA, BB, BG, BR, BW, BY, BZ, CA, CH, CN, CO, CR, CU, CZ, DE, DK, DM, DZ, EC, EE, EG, ES, FI, GB, GD, GE, GH, GM, GT, HN, HR, HU, ID, IL, IN, IS, JP, KE, KG, KM, KN, KP, KR, KZ, LA, LC, LK, LR, LS, LT, LU, LV, LY, MA, MD, MG, MK, MN, MW, MX, MY, MZ, NA, NG, NI, NO, NZ, OM, PG, PH, PL, PT, RO, RS, RU, SC, SD, SE, SG, SK, SL, SM, SV, SY, TJ, TM, TN, TR, TT, TZ, UA, UG, US (patent), UZ, VC, VN, ZA, ZM, ZW.

(84) **Designated States** *(unless otherwise indicated, for every kind of regional protection available)*: ARIPO (BW, GH, GM, KE, LS, MW, MZ, NA, SD, SL, SZ, TZ, UG, ZM, ZW), Eurasian (AM, AZ, BY, KG, KZ, MD, RU, TJ, TM), European (AT, BE, BG, CH, CY, CZ, DE, DK, EE, ES, FI,

[Continued on next page]

(54) Title: COMPACT LENS TURRET ASSEMBLY

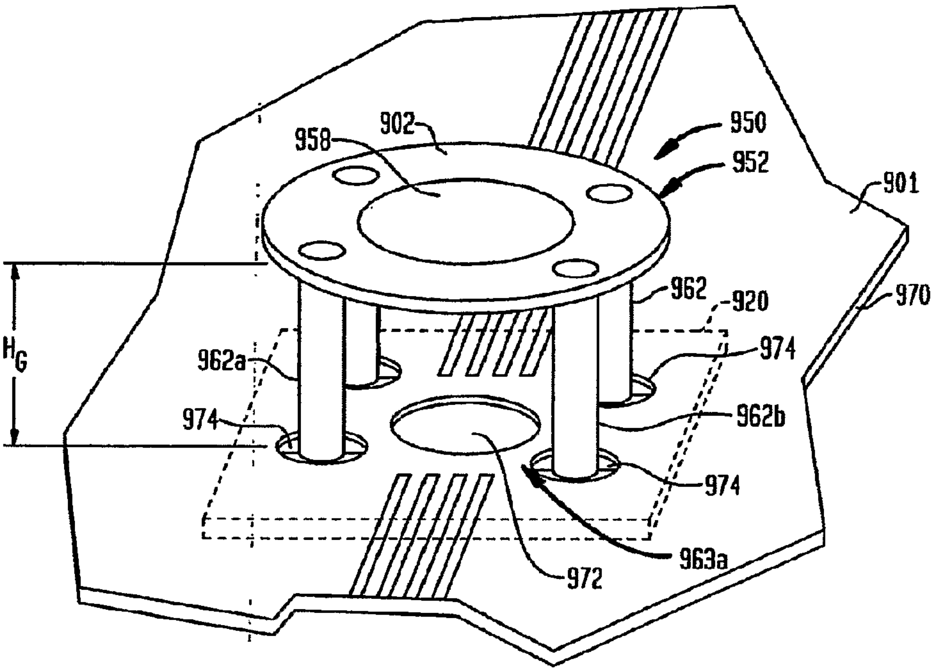

(57) **Abstract:** An electronic camera module incorporates a sensor unit (20) having a semiconductor chip (22) such as a CCD imager and a cover (34) overlying the front surface of the chip. An optical unit (50) includes one or more optical elements such as lenses (58). The optical unit has engagement features (64) which abut alignment features on the sensor unit as, for example, portions (44) of the cover outer surface (38), so as to maintain a precise relationship between the optical unit and sensor unit.

WO 2007/056069 A1

FR, GB, GR, HU, IE, IS, IT, LT, LU, LV, MC, NL, PL, PT, RO, SE, SI, SK, TR), OAPI (BF, BJ, CF, CG, CI, CM, GA, GN, GQ, GW, ML, MR, NE, SN, TD, TG).

Declarations under Rule 4.17:

— *as to applicant's entitlement to apply for and be granted a patent (Rule 4.17(ii))*

— *as to the applicant's entitlement to claim the priority of the earlier application (Rule 4.17(iii))*

Published:

— *with international search report*

— *before the expiration of the time limit for amending the claims and to be republished in the event of receipt of amendments*

For two-letter codes and other abbreviations, refer to the "Guidance Notes on Codes and Abbreviations" appearing at the beginning of each regular issue of the PCT Gazette.

COMPACT LENS TURRET ASSEMBLY

CROSS-REFERENCE TO RELATED APPLICATIONS

[0001] This application is a continuation of United States Application Serial No. 11/265,727 filed on November 2, 2005, which is a continuation-in-part of U.S. Patent Application Serial No. 11/121,434, filed May 4, 2005, which application claims the benefit of the filing date of U.S. Provisional Patent Application No. 60/568,052, filed May 4, 2004, the disclosures of which are hereby incorporated herein by reference.

FIELD OF THE INVENTION

[0002] The present invention relates to the mounting and packaging of opto-electronic devices such as solid-state image sensors.

BACKGROUND OF THE INVENTION

[0003] Numerous electronic devices such as common electronic still cameras and video cameras include solid-state image sensors. A typical solid-state image sensor is formed in a semiconductor chip and includes an array of light-sensitive elements disposed in an area of the front surface of the chip, referred to herein as the "imaging area." A color-sensitive image-sensing chip may include arrays of elements sensitive to different wavelengths of light. Each light-sensitive element is arranged to generate an electrical signal representing light falling on a particular small portion of the imaging area. The semiconductor chip typically also includes internal electrical circuits arranged to convert these signals into a form intelligible to other elements of the device as, for example, into one or more streams of digital values representing the light falling on the various individual pixel areas.

[0004] Image sensing chips typically are used in conjunction with optical elements such as lenses which act to focus the image to be observed by the chip onto the active area, as well as wavelength-selective filters. The optical elements most commonly are mounted in a housing referred to as a "turret." Typically, both the turret and the chip are mounted, directly or indirectly, onto a supporting circuit panel, which supports and electrically interconnects various components of the device in addition to the image sensor. Many image sensor chips are supplied in packages which incorporate a dielectric enclosure surrounding the chip, with a transparent window overlying the imaging area of the chip. The enclosure is provided with terminals, so that the enclosure can be mounted on a circuit board with the imaging area and the overlying window facing upwardly away from the circuit board, and with the terminals connected to electrically conductive features of the circuit board. The turret can then be positioned over the package. These arrangements typically require a turret which occupies an area of the circuit board substantially larger than the area occupied by the chip package and substantially larger than the area occupied by the image-sensing chip itself. Stated another way, the area occupied by the turret in a plane parallel to the plane of the imaging area is substantially larger than the area occupied by the image sensing chip and substantially larger than the area occupied by the package which holds the image sensing chip. This increases the size of the overall device. This problem is particularly acute in the case of very compact devices as, for example, cameras incorporated in cellular telephones and personal digital assistants ("PDAs").

[0005] Moreover, it is important to position the optical elements mounted in the turret accurately with respect to the imaging area of the image-sensing chip. In particular, to achieve proper focusing of the image on the imaging area of the chip, it is desirable to position the optical axis of the lenses and other optical elements in the turret precisely perpendicular to the plane of the imaging area, and to place the lenses at a desired height above the imaging area. The need for such precise positioning complicates the design of the assembly and, in some cases, may further aggravate the turret size problem noted above.

[0006] Another approach which has been suggested is to mount a bare or unpackaged image-sensing chip directly to a turret. In such an arrangement, it would theoretically be possible to achieve good positioning of the chip relative to the optical elements in the turret. However, image-sensing chips are susceptible to mechanical damage and to chemical attack by atmospheric contaminants. Thus, the turret in such an arrangement typically must include arrangements for holding the bare chip in a sealed environment. Moreover, bare imaging sensing chips are extremely sensitive to particulate contamination. As discussed above, each optically-sensitive element provides an electrical signal representing the light falling in a small element of the image, commonly referred to as a picture element or "pixel." If a particle lands on a particular optically sensitive element, it will block light directed onto that element, so that the resulting signals will show the pixel as dark. When the image is reconstructed from the signals, it will have a dark spot at the affected pixel. Any process which requires assembly of a bare chip with a turret must be conducted under stringent conditions to minimize particulate contamination. Moreover, such processes often suffer from high defect rates caused by particulate contamination. Both of these factors tend to increase the cost of the resulting assemblies. Moreover, these assemblies as well typically require turrets having areas substantially larger than the area of the chip itself.

[0007] Thus, there are substantial needs for improved opto-electronic assemblies and assembly methods.

SUMMARY OF THE INVENTION

[0008] One aspect of the present invention provides a camera module. A camera module according to this aspect of the invention desirably includes a circuit panel having a top side, a bottom side and a transparent region, the circuit panel also having conductors. The module according to this aspect of the invention desirably also includes a sensor unit disposed on the bottom side of said circuit panel. The sensor unit incorporates a semiconductor chip having a front surface including an imaging area facing in a forward direction in alignment with the transparent region of the circuit panel and an imaging circuit adapted to generate signals representative of an optical image impinging on the imaging area. The sensor unit may also include a cover having a transparent area aligned with the imaging area, the cover overlying said front surface and being secured to the chip. The cover has an outer surface facing away from the chip and toward the bottom surface of the circuit panel. The imaging circuit of the chip in the sensor unit preferably is electrically connected to conductors on the circuit panel.

[0009] The module may also include an optical unit incorporating one or more optical elements. The optical unit may project from the top side of the circuit panel.

[0010] Using a sensor unit which incorporates a cover facilitates handling and mounting of the sensor unit. The sensor unit may have contacts exposed at said outer surface of the cover and electrically connected to the imaging circuit of the chip. The contacts are electrically connected to the conductors on the circuit panel. For example, the contacts on the sensor unit may be bonded to the conductors on the circuit panel using typical surface-mounting techniques, thereby mounting the sensor unit to the circuit panel in a "face-down" orientation, with the contacts and the imaging area of the chip facing toward the circuit panel. Features of the optical unit, the sensor unit or both may extend through the circuit panel so that the optical unit bears directly on the sensor unit, thereby positioning the optical unit with respect to the sensor unit.

[0011] A further aspect of the present invention provides methods of treating a camera module. A method according to this aspect of the invention desirably includes the step of performing an operation on a sensor unit including a semiconductor chip disposed on a bottom side of a circuit panel with an imaging area of the front surface of the chip facing in a forward direction toward the bottom side of the circuit panel in alignment with a hole in the circuit panel, by accessing said sensor unit through the hole in the circuit panel and through at least one gap in a portion of an optical unit including one or more optical elements projecting from a top surface of the circuit panel. For example, the operation performed on the sensor unit may include cleaning the front face of the sensor unit. Where the sensor unit includes a cover as discussed above, the cleaning operation may include cleaning the cover. The optical unit may include a turret or support structure defining relatively large gaps between structural elements to facilitate such operations.

[0012] A further aspect of the invention provides a double camera module. The module according to this aspect of the invention desirably includes a circuit panel having a top side facing in a forward direction and a bottom side facing in a rearward direction. The module includes first and second sensor units. The first sensor unit incorporates a first semiconductor chip having a first front surface with a first imaging area and an imaging circuit. The first sensor unit is disposed on the bottom side of the circuit panel with the first front surface facing forwardly toward the circuit panel. Preferably, the circuit panel has a first hole aligned with the imaging area of the first sensor unit, and the module also includes a first optical unit aligned with the first hole and first sensor unit. The first optical unit may project forwardly from the top side of said circuit panel. The second sensor unit includes a second semiconductor chip having a second front surface with a second imaging area and an imaging circuit. The second sensor unit is disposed on the top side of said circuit panel with the second front surface facing rearwardly toward said top side of said circuit panel. The circuit panel may have a second hole in alignment with the second sensor unit and the unit may include a second optical unit projecting rearwardly from the bottom side of the circuit panel in alignment with the second hole and second sensor unit.

[0013] The modules in accordance with this aspect of the invention incorporate two sets of camera elements mounted in opposite orientations relative to the circuit panel. Such a module can be used, for example, in cellular telephones and other portable devices to provide both a camera pointing toward the user and a camera pointing away from the user. The overall height of the module can be less than the aggregate of the heights of the two sets of camera elements.

BRIEF DESCRIPTION OF THE DRAWINGS

[0014] FIG. 1 is a diagrammatic sectional view of a sensor unit used in one embodiment of the invention.

[0015] FIG. 2 is a top plan view of the sensor unit shown in FIG. 1.

[0016] FIG. 3 is a bottom plan view of an optical unit used with the sensor unit of FIGS. 1 and 2.

[0017] FIG. 4 is a side elevational view of the optical unit shown in FIG. 3.

[0018] FIG. 5 is a diagrammatic sectional view of a module according to one embodiment of the invention, formed from the units of FIGS. 1-4.

[0019] FIG. 6 is a top plan view of a circuit panel together with a sensor unit.

[0020] FIG. 7 is a diagrammatic sectional view of an assembly including the circuit panel and sensor unit of FIG. 6 and an optical unit.

[0021] FIGS. 8, 9 and 10 are diagrammatic sectional views of assemblies according to further embodiments of the invention.

[0022] FIGS. 11 and 12 are fragmentary sectional views depicting portions of modules according to further embodiments of the invention.

[0023] FIG. 13 is a diagrammatic sectional view of an assembly according to yet another embodiment of the invention.

[0024] FIG. 14 is a diagrammatic perspective view depicting components during a manufacturing process according to a further embodiment of the invention.

[0025] FIG. 15 is a diagrammatic sectional view of an assembly in accordance with yet another embodiment of the invention.

[0026] FIG. 16 is a diagrammatic, fragmentary perspective view depicting an assembly in accordance with yet another embodiment of the invention.

[0027] FIG. 17 is a fragmentary sectional view depicting an assembly in accordance with a still further embodiment of the invention.

[0028] FIG. 18 is a view similar to FIG. 16 depicting an assembly according to another embodiment of the invention.

DETAILED DESCRIPTION

[0029] A module in accordance with one embodiment of the present invention includes a sensor unit 20 (FIGS. 1 and 2). Sensor unit 20 includes a semiconductor chip 22 having a front or top surface 24 and an oppositely directed rear or bottom surface 26. Front surface 24 includes an imaging area 28. Chip 22 includes electronic circuits, schematically indicated at 30 in FIG. 1, for generating one or more electrical signals representing an optical image impinging on imaging area 28.

Numerous electrical circuits are well known in the imaging art for this purpose. For example, the semiconductor chip 22 may be a generally conventional charge-coupled device (CCD) imaging chip with conventional circuits such as clocking and charge-to-voltage conversion circuits. Any other conventional circuits may be used. Chip 22 has electrical connections or contacts 32 exposed at front surface 24 and electrically connected to the internal circuitry 30.

[0030] Sensor unit 20 also includes a cover 34 having an inner or bottom surface 36 and an outer or top surface 38. The cover overlies the front surface 24 of chip 22, with the outer surface 38 facing upwardly away from the front surface. Cover 34 is physically attached to chip 22 and sealed to the chip by a sealant or bond material 40. At least that region of the cover 34 which overlies the imaging area 28 is substantially transparent to light in the range of wavelengths to be imaged by the structure. In the particular embodiment illustrated, cover 34 is a unitary slab of a transparent material such as a glass or polymeric material, so that the entirety of the cover is transparent to light. Sensor unit 20 further includes metallic electrical connections 42 extending from chip contacts 32 through the cover 34, such that connections 42 are exposed at the top or front surface 38 of the cover. These connections 42 serve as the contacts of the overall sensor unit, so that the sensor unit, including chip 22, can be electrically connected to external structures through these contacts or connections 42. As shown in FIG. 2, connections or contacts 42 do not occupy the entire area of the outer or top surface 38. Thus, the outer or top surface 38 includes land regions 44 (FIG. 2) which are offset from connections or contacts 42 in horizontal directions, along the plane of the outer surface and parallel to the plane of the imaging area. The land regions 44 are integral with the remainder of the top surface and are shown in broken lines in FIG. 2 to indicate that these regions are physically indistinguishable from the remainder of the top surface 38.

[0031] Land regions 44 of top surface 38 are in a predetermined spatial relationship with the imaging area 28 of chip 22. The front surface, including the land regions, is substantially planar and substantially parallel to the plane of the planar imaging area 28. Also, the front surface lies at a well-controlled height above the plane of imaging area 28. The land regions 44 are also referred to herein as the "alignment features" of the sensor unit. Merely by way of example, front surface 38 of cover 34 may be parallel to the plane of the imaging area within about 2 arc seconds and may be within about 5 microns of a nominal height above imaging area 28. The sensor unit may be fabricated in accordance with U.S. Published Patent Application No. 2005/0082653, published April 21, 2005, and co-pending, commonly assigned U.S. Published Patent Application No. 2005/0095835, published May 5, 2005, the disclosures of which are hereby incorporated by reference herein. As described in further detail in the aforementioned applications, such units can be fabricated in a wafer scale or partial wafer scale process, in which a large cover layer is bonded to a wafer or a portion of a wafer incorporating numerous semiconductor chips, the electrical connections are made, and then the resulting assemblage is severed to form numerous individual sensor units.

[0032] An optical unit 50 (FIGS. 3, 4 and 5) includes a turret 52 which, in the particular embodiment depicted, includes both an outer shell 54 and an inner barrel 56 mounted to the outer shell 54. The optical unit further includes optical elements such as lenses 58 mounted to the inner barrel 56 of the turret, as well as one or more wavelength-selective filters 59, also mounted within barrel 56. The optical elements, and particularly lenses 58, are arranged along an optical axis 60, and are arranged to focus an image onto a plane perpendicular to this axis. Barrel 56 is mounted for adjustment in upward and downward directions along the optical axis. The barrel and outer shell 54 may be provided with elements such as screw threads or cam surfaces for controlling the position of the barrel, and hence of the optical elements, relative to the outer shell in the direction along axis 60. Alternatively, the barrel and shell 54 may be arranged so that the barrel is slideable in the axial direction relative to the outer shell 54, and so that the barrel can be fixed in position relative to the outer shell once it has been adjusted to a desired position as, for example, by applying a small ultrasonic or solvent weld between these elements, or by applying an adhesive to fix the barrel in position relative to the shell.

[0033] The shell 54 of turret 52 has a main surface 61 facing downwardly or rearwardly and has two sets of rear elements 62 projecting downwardly or rearwardly from this main surface. Each set of rear elements 62 is arranged in a row along one edge of the turret. Rear elements 62 have planar surfaces 64 facing downwardly or rearwardly, away from the remainder of the turret. These surfaces 64 are coplanar with one another and thus cooperatively define a planar rear engagement surface disposed below the main surface 61. This surface 64, defined by the various rear elements 62, is perpendicular to the optical axis 60 to within a closely controlled tolerance. The spaced-apart rows of rear elements 62 define a groove 63 (FIGS. 3 and 4) extending across the bottom of the turret in the lengthwise direction (from the left to the right in FIG. 3). Also, the rear elements 62 within each row are spaced-apart from one another so as to define smaller gaps 65 extending in from the opposite longitudinal edges of the shell and merging with groove 63.

[0034] Shell 54, and hence turret 52 as a whole, has horizontal dimensions, in a plane perpendicular to optical axis 60, approximately equal to or slightly smaller than the corresponding dimensions of sensor unit 20. That is, the lengthwise dimension L_T (FIG. 3) of turret 52 is equal to or less than the lengthwise dimension L_S (FIG. 2) of sensor unit 20, and the widthwise dimension W_T (FIG. 3) of the turret is equal to or less than the widthwise dimension W_S (FIG. 2) of the sensor unit.

[0035] In the assembled module (FIG. 5), turret 52 overlies the outer surface of cover 38. The rear elements 62 of the turret are aligned with the land regions 44 (FIG. 2) of the cover, so that rear elements 62 are offset in the widthwise direction from connections 42 and from imaging area 28. The optical axis 60 of the optical unit is aligned with the center of imaging area 28 of the sensor unit. The rear engagement surface 64, defined by rear element 62 on the turret, abuts the land regions 44 (FIG. 2). Because the cover outer surface 38 of the sensor unit and, hence, the surface in land regions 44, are precisely parallel to the plane of imaging area 28, and because the rear engagement surface 64 of the optical unit is perpendicular to optical axis 60, the optical axis 60 is positioned perpendicular to the plane of imaging area 28 to within a small tolerance. Also, because outer surface 38 of the cover and land regions 44 lie at a precise elevation above imaging area 28, the optical elements such as lenses 58 will lie at precise heights above the imaging area.

[0036] The module can be maintained in this assembled condition by adhesive 68 (FIG. 5) disposed along the edges of the unit as, for example, within some portion of the spaces 65 between adjacent rear elements 62 of the turret. In a variant of this approach, the adhesive may extend between the confronting rear engagement surface 64 of the turret and outer surface 38 of the sensor unit cover. However, the thickness of any such adhesive in this area should be small and well-controlled, so that it does not cause substantial variation in spacing between the confronting surfaces of the turret and sensor unit. In a further variant, the adhesive may be replaced by a metallic bonding material such as a solder, provided that the land regions 44 of the cover and the rear engagement elements 62 are solder-wettable. In a still further variant, the turret 52 of the optical unit may be clamped against the sensor unit by a spring clip or other mechanical clamping device having sufficient strength to maintain engagement between the rear engagement surfaces 64 and the land areas of the cover. The engaged surfaces 64 and 44 in this embodiment do not control the positioning of the optical module relative to the sensor module in horizontal directions, parallel to the plane of the imaging area 28 in the sensor unit. Relative positioning of the units in the horizontal directions can be controlled by engaging the units with fixtures (not shown) during assembly. Particularly precise alignment in the horizontal directions normally is not required.

[0037] The main surface 61 of turret 52 is supported above the front surface 38 of the cover 34 and above the electrical connections or contact 42 of the sensor unit. The groove 63 in the bottom of the turret and, hence, the space between the turret main surface and the sensor unit extend to the ends of the module (at the right and left in FIG. 5), so that electrical connections can be made by conductors (not shown) extending into the module beneath main surface 61 through groove 63. Similarly, conductors can extend into the space between the main surface 61 and the outer surface 38 of the sensor unit cover, through the spaces 65 between adjacent rear elements 62 along the lengthwise edges of the module.

[0038] In one arrangement, the conductors extending into the module are conductors of a circuit panel. As seen in FIG. 6, a circuit panel such as a rigid or flexible circuit panel 70 is provided with a hole 72 slightly larger than the imaging area 22 of the sensor unit, and with slots 74 slightly larger than the land regions 44 of the sensor unit cover. The circuit panel has conductors 76 on its rear or bottom surface, these conductors terminating in contact pads 78, arranged in a pattern corresponding to the pattern of contacts 42 on the sensor unit 20. The sensor unit 20 is mounted to the bottom side of the circuit panel, with hole 72 roughly aligned with imaging area 28 and with slots or apertures 74 roughly aligned with the land areas 44 of the cover surface. Contacts 44 of the sensor unit are bonded to the pads 78 of the circuit panel and thus electrically connected to conductors 76. For example, the sensor unit can be mounted to the circuit panel using conventional solder-bonding techniques. The turret 52 of the optical unit is positioned generally above circuit panel 70. The main surface 61 of the turret lies above the circuit panel. However, rear elements or projections 62 of the turret project downwardly through the slots or apertures 74 in the circuit panel 70, so that the rear engagement surface 64 of the turret is engaged with the land regions 44 on cover outer surface 38 in the manner discussed above. Thus, the rear engagement surface and the land regions of the cover surface function as discussed above to maintain precise perpendicularity between the optical axis 60 of the optical elements of the turret and the plane of the imaging area, as well as precise control of the height of the optical elements above the imaging area. Circuit panel 70 may be a small modular circuit panel which may be connected to other elements of the circuit. Alternatively, circuit panel 70 may be a main circuit panel carrying other electronic elements of the device. The circuit panel extends in the space between the main surface 61 of the turret and the cover top surface. This arrangement provides a very low-height assembly; the height of the assembly above the circuit panel (towards the top of the drawing in FIG. 7) is less than the overall height of the turret. Stated another way, this arrangement allows positioning of the sensor unit on one side of a circuit panel and the turret on the opposite side, while maintaining precise positioning of the turret relative to the sensor unit. The turret may be secured in place by adhesive bonding or otherwise fastening the turret to the circuit panel or to the sensor module. However, the circuit panel 70 does not control the relative positioning of the turret and the imaging area.

[0039] Moreover, as shown in FIG. 7, this arrangement materially reduces the projection distance P of the assembly above the front surface 71 of the circuit panel. Typically, the optical elements 58, such as lenses, must be mounted at a substantial height or distance from the imaging area of the sensor unit; this distance is set by optical requirements such as the focal length of the lenses. In a conventional arrangement, where both the optical unit and the sensor unit are disposed entirely on one side of the circuit panel, the projection distance P is equal to the aggregate of the distance between the optical elements and the sensor unit and the thickness of the sensor unit. By contrast, in an arrangement as shown in FIG. 7, where the optical unit is disposed at least in part on the front side of the circuit panel and the sensor unit is disposed on the rear side of the circuit panel, the projection distance P may be less than the distance from the optical elements to the sensor unit. This arrangement greatly facilitates mounting the camera module in a small device such as a cellular telephone, personal digital assistant, or compact digital camera. Moreover, the overall height or forward-to-rearward extent of the camera module is less than the sum of the heights of the individual elements which constitute the module: the circuit panel 70, the sensor unit 20, and the optical unit 50. The height or thickness of the circuit panel 70 does not contribute to the overall height H. By contrast, in a conventional assembly where the sensor unit and optical unit are both mounted on the same side of the circuit panel, the thickness of the circuit panel adds to the overall height of the module.

[0040] During manufacture, either the turret or the sensor unit may be mounted to the circuit panel first. Where the sensor unit is mounted first, it can be tested in conjunction with other electronic components on the circuit panel prior to mounting the turret. Because the sensor unit is a sealed unit with the cover in place, the assembly process need not incorporate the stringent measures required for handling bare sensor chips.

[0041] A module in accordance with a further embodiment of the invention (FIG. 8) incorporates an optical unit with a turret 152 and a sensor unit 120 generally similar to those discussed above. Here again, the module has features such as rear engagement elements 162 defining a rear engagement surface 164 disposed below the main surface 161 of the module. Once again, the rear engagement surface 164 is engaged with the outer or top surface 138 of the cover on the sensor unit 120, so that the turret, and hence the optical axis 160 of the optical components, is maintained precisely perpendicular to the plane of the imaging area 128 in the sensing unit. In the module of FIG. 8, however, the turret 152 has contact pads 102 exposed at main surface 161 and facing downwardly or rearwardly, towards the sensor unit 120. Contact pads 102 are offset horizontally from the rear engagement elements 162 and are recessed vertically upwardly, relative to the rear engagement surface 164 defined by the engagement elements. Turret 152 further includes terminals 104 disposed on exterior surfaces of the turret which will be exposed in the completed module. Thus, the terminals 104a at the left in FIG. 8 are disposed along an edge of the turret, whereas terminals 104b are disposed on an upwardly facing sloped exterior surface of the turret. Contact pads 102 and terminals 104 are connected to one another by leads 106. Some of these leads, such as the leads between terminals 104a and contact pads 102 extend along the main surface 161 of the turret in regions offset from the rear engagement elements 162, whereas other leads, such as the leads schematically shown between terminals 104b and pads 102, may extend through the turret. Still other leads (not shown) may extend in or on other surfaces of the turret, but desirably do not extend on the rear engagement surface 164. During assembly of the module, the electrical connections or contacts 142 of the sensor unit are electrically connected to contact pads 102. For example, the electrical connection 142 may be solder-bonded to contacts 102 or attached using a conductive adhesive (not shown), or metallurgically-bonded to the contacts as, for example, by diffusion or eutectic bonding. This bonding process may be performed at the same time as the rear engagement surface 164 of the turret is brought into engagement with the outer surface 138 of the sensor module. Desirably, during the bonding operation, some or all of the bonding materials, contacts 142, contact pads 102 can yield or move so that the contacts 142 and contact pads 102 do not constrain movement of the turret 152 towards the sensor unit 120. For example, in a solder-bonding operation, solder forming a portion of contact pads 102 or contacts 142, or both, may soften or melt so as to allow free movement of the turret toward the sensor unit, and thus allow full engagement of the rear engagement surface 164 with the outer surface 138 of the sensor unit. After solidification of the solder bonds, the solder bonds between the contacts 142 and contact pads 102 may serve to hold the turret in mechanical engagement with the sensor unit. A conductive adhesive or other bonding conductive system may be used in place of a solder. In a further alternative, contact pads 102 may be displaceable relative to the remainder of the turret. Also, an additional adhesive (not shown) or a mechanical fastener such as a spring clip or clamp (not shown) may be provided to hold the turret in engagement with the sensor unit, as discussed above. It is not essential that the contacts 142 of the sensor unit be bonded to the contact pads 102. For example, the contacts 142 may be in the form of pins or other projecting conductive elements, whereas the contact pads may be in the form of small sockets adapted to receive such pins and to make electrical connection with the pins. Other configurations which will establish electrical contact when brought into mechanical engagement with one another can be substituted for a pin and socket connection.

[0042] In the embodiment of FIG. 8, the module, and particularly the configuration of the turret 152 and terminals 104, is selected so that the module can be releasably engaged with a socket, with the terminals being in electrical contact with the socket. As seen in FIG. 8, the terminal is positioned in a socket 110 incorporating a socket base 112, a first set of upwardly projecting socket contacts 114 and a second set of socket contacts 116. Socket contacts 116 extend upwardly from socket base 112 and extend inwardly toward the socket contacts 114. Contacts 114 and 116 are resilient, so that the module can be tilted to disengage it from the socket or to re-engage it with the socket, as indicated by the double-ended arrow in FIG. 8. When the socket is engaged, the resilience of the contacts holds the rear surface of the chip in the sensor unit 120 against the socket base 112 and also provides contact pressure so that contacts 104a are firmly engaged with the first contacts 114, whereas contacts 104b are firmly engaged with second contacts 116. Socket base 112 may be permanently mounted to a circuit board 170, so that the socket contacts 114 and 116 are electrically connected to other elements mounted on the circuit panel (not shown). In a variant, the socket base may be formed integrally with the circuit panel. Releasable mounting of the module to the socket and circuit panel provides significant advantages in production. Defects in the module or in the other elements of the circuit may not be detectable until after the module has been mounted to the circuit panel. By making this mounting releasable, it is possible to reclaim the module where the other elements are defective, or to reclaim the other elements where the module is defective, without operations such as desoldering and solder-bonding, typically required to remove a permanently-mounted module and replace it with another. The particular socket design depicted in FIG. 8, and the matching configuration of terminals 104 on the module, are only illustrative. The module can be configured to mate with any form of socket.

[0043] A module according to a further embodiment of the invention (FIG. 9) has a turret 252 with an upstanding portion 253 housing the optical elements, and has terminals 204 extending upwardly along this portion. Such a module can be engaged in a socket 210, formed as a hole extending through a circuit board 270 and having socket contacts 214 arrayed around the hole. In this configuration, the upstanding portion 253 of the module desirably projects at least partially through the circuit board. In a further variant, terminals 204 of the module are replaced by pins projecting upwardly from the upper surface of the module, around the upstanding portion, so that the entire module can be engaged in a similar circuit board having a hole which receives the upstanding portion and having individual pin-receiving sockets surrounding such hole.

[0044] In the module of FIG. 9, turret 252 is formed as a single, unitary part, without the moveable or adjustable barrel discussed above with reference to FIG. 5. The optical elements, such as lenses 258, are mounted directly to this unitary piece. This aspect of the construction shown in

FIG. 9 can be utilized in any of the other embodiments discussed herein.

[0045] A module according to a further embodiment of the invention (FIG. 10) incorporates a turret 352 similar to the turrets discussed above. However, turret 352 does not incorporate a rear engagement surface, as discussed above. In the embodiment of FIG. 10, the features used to control positioning of the turret relative to the sensor unit 320 are metallic features, rather than features integral with the remaining structure of the turret itself. Features 302 may be in the form of metallic pads or vias. These pads or vias are formed in a precise positional relationship to those features of turret 352 which engage the optical elements 358, so that features 302 lie in a preselected positional relationship to the optical axis 360 of the optical elements 358. The electrical connections or contacts 342 on the sensor unit 320 engage features 302. Stated another way, the electrical connections 342 constitute the engagement features which control positioning of the sensor unit relative to the turret and thus control positioning of the imaging area 328 of the semiconductor chip relative to the optical axis. In this embodiment, contacts 342 desirably are formed from materials which remain substantially rigid during the assembly process. For example, connections 342 may include small, high-melting metallic spheres or bumps projecting above the outer or top surface 338 of the cover of the sensor unit. Connections 342 may include so-called "solid-core" solder balls which incorporate a core formed from a relatively high-melting material such as copper or copper-coated steel and a thin coating of a solder. Alternatively, contacts 342 may be formed from a relatively rigid metallic material having a thin coating of gold, silicon or other metal suitable for diffusion-bonding to features 302. In this embodiment, contacts 342 desirably are placed in a precise positional relationship with the imaging area 338. For example, all of these contacts desirably have substantially the same height above the imaging area. As in the embodiments discussed above, engagement between the features of the turret and the features of the sensor unit positions the turret relative to the imaging area.

[0046] In the embodiment of FIG. 10, vias or features 302 are electrically connected to terminals 304 disposed on an outer surface of turret 352. Terminals 304 are adapted for surface-mounting to features of a circuit panel 370. Desirably, the connection between features 342 of the sensor unit and features 302 of the turret 352 is arranged so that it will withstand the temperatures encountered in surface-mounting and reflow.

[0047] In a variant of the approach shown in FIG. 10, the turret 352 and sensor unit 320 can be provided with additional features similar to features 302 and 342, which are not electrically connected in the system and which are used solely for alignment and mechanical engagement between the sensor unit and optical unit. Where such additional features are provided, the electrical connections can be made in any of the ways discussed herein connection with other embodiments.

[0048] In the arrangements of FIGS. 9 and 10, the optical units 250 and 350 are not disposed entirely on the front side 271 or 371 of the circuit panel. Nonetheless, because at least a part of the optical unit projects forwardly of the front side 271, 371 of the circuit panel, significant reduction in the forward projection distance P and overall height H of the assembly can be achieved.

[0049] In the embodiments discussed above, the cover on the optical unit is substantially flat. Such as flat cover is advantageous, in that it is simple to make the cover with an accurate, flat configuration with a controlled thickness. However, in a variant (FIG. 11), the flat cover can be replaced by a cover 434 having a plurality of upstanding projections 462 (only one of which is shown in FIG. 11) cooperatively defining an upwardly-facing exposed engagement surface 403 substantially parallel to the plane of the imaging area 428 on sensor chip 422. The turret may be provided with recessed engagement surfaces 406 disposed slightly above the downwardly-facing main surface 461 of the turret. Alternatively, main surface 461 may be flat, and engagement surfaces 404 of the cover may be engaged with the main surface. Here again, the main surface 461 may be elevated slightly above the top surface 438 of the cover, so that the top surface and main surface of the cover define a gap between these two surfaces for access to the electrical connections 424.

[0050] In another embodiment (FIG. 12), the engagement features of sensor unit 520 constitute regions 502 of the front surface on the semiconductor chip 522. Regions 502 are exposed at the outer or top surface 538 of the cover 534 by holes 504 extending through the cover 534. As used in this disclosure with reference to a feature and a surface of a structure, a feature is said to be "exposed at" a surface when such feature is not covered by any other element of the structure, as seen in a view looking toward the surface from outside of the structure. Thus, surface regions 502 of chip 522 are exposed at outer surface 538, inasmuch as these portions 502 are not covered by any other element of sensor unit 520 when seen from above, looking down at surface 538. Using this same definition, features which project from the surface are also "exposed at" the surface. For example, projecting surfaces 403 on projections 402 of cover 434 (FIG. 11) are also "exposed at" the outer surface 438 of the sensor unit, whereas recessed surfaces 406 on turret 452 are exposed at the main surface 461 of the turret. Similarly, rear engagement surfaces 64 (FIGS. 3 and 4) are exposed at main surface 61 of turret 52. Likewise, land regions 44 of cover top surface 38 (FIG. 2), which are flush with the remainder of surface 38, are exposed at surface 38.

[0051] In the embodiment of FIG. 12, turret 552 is provided with projecting rear engagement elements 562 which define an engagement surface 564. Engagement surface 564 abuts or engages surface regions 502 of the chip 522. Holes 504 desirably lie outside of the area enclosed by the seal 540 of optical unit 520, and hence do not provide a path for chemical or particulate contamination of imaging area 528 or other components of chip 522. The region of chip 522 outside of seal 540 may be provided with a robust passivation layer (not shown).

[0052] In an alternative arrangement, the region of cover 534 occupied by holes 504 may be entirely omitted, so that the cover 534 terminates inboard of the edges of chip 522, leaving edge regions of the chip exposed. The arrangements discussed with reference to FIGS. 11 and 12 can be used in embodiments incorporating a circuit panel extending between the turret and the cover of the optical unit, in the manner discussed with reference to FIGS. 6 and 7.

[0053] In the embodiments discussed above, the turret of the optical module has horizontal dimensions and hence area equal to or smaller than the corresponding dimensions and area of the optical unit. This provides an extremely compact module. In a variant shown in FIG. 13, turret 652 has at least one dimension in a horizontal direction, perpendicular to optical axis 660 and parallel to the plane of imaging area 628, which is larger than the corresponding dimension of optical unit 620. The turret may incorporate a lip 602 projecting downwardly from the remainder of the turret. An edge of optical unit 620, such as an edge defined by the semiconductor chip or the cover, may be brought into abutment with such a lip so as to locate the optical unit relative to the turret in a horizontal direction. Also, the turret may be provided with another downwardly-projecting element 604 such as one or more lips or posts extending downwardly to the vicinity of the chip, and desirably downwardly to the vicinity of the chip rear surface 626. Projecting element 604 desirably carries one or more terminals 606, which in turn, is electrically connected to the sensor unit 620 in any of the ways discussed above. A module according to this embodiment may be surface-mounted on a circuit board 670 in a "face-up" arrangement, with the turret projecting upwardly away from the circuit board. Desirably, the horizontal dimensions of the module, even in this embodiment, do not greatly exceed the horizontal dimensions of the optical unit. In some cases, the turret 652 may occupy a horizontal area (measured in a plane perpendicular to the optical axis 660 and parallel to imaging area 628) no more than about 1.2 times the area of the optical unit 620 itself.

[0054] Modules according to certain embodiments of the present invention may be fabricated in groups. In one fabrication process, a turret element 702, including a plurality of individual turrets 752, is assembled with a starting unit 704. The starting unit 704 incorporates a wafer 706, including a plurality of image-sensing semiconductor chips 722, as well as unitary cover sheet 708 which includes a plurality of individual covers 734. Starting unit 704 may be assembled by assembling the cover sheet 708 to wafer 706 in the manner discussed in greater detail in the aforementioned co-pending commonly assigned patent applications incorporated by reference herein. Turret element 702 may be a unitary body incorporating portions defining each of the turrets. Although lines of demarcation 710 are shown extending between the various turrets 752 of the turret element, these lines of demarcation may or may not be visible in the actual practice. Similarly, lines of demarcation may or may not be visible between the individual covers 734 of the cover sheet and between the individual chips 722 of the wafer. The assembly process is performed so as to align the optical axis of each turret with the imaging area (not shown) in an associated chip 722, and hence align the optical axis of each turret with one cover 734 of the cover sheet.

[0055] As in the embodiments discussed above, certain aspects of the positioning are controlled by engaged features of the turrets and sensor units, as discussed above. Where the turret element 702 is rigid, it is not essential that engagement features be provided on every individual turret. The process of assembling the turret element to the starting unit may be performed before, during or after formation of the starting unit. In the embodiment shown, cover sheet 708 is attached to wafer 706 before turret element 702 is attached to the cover sheet. However, in a variant of the process, the turret element may be attached to the cover sheet before the cover sheet is attached to the wafer, or at the same time as the cover sheet is attached to the wafer. After assembly, the turret element as well as the starting unit are severed along the lines indicated by demarcation line 710 so as to separate the various turrets and the various portions of the starting unit into individual modules, each including one turret 752 and the associated chip 722 and cover 734. The optical elements, such as the lenses discussed above, may be assembled with the turrets either before or after assembly of the turrets with the starting unit.

[0056] In a variant of this process, the starting unit may include less than an entire wafer. In a further variant, the starting unit may include separately formed, individual covers rather than a unitary cover sheet. In a further variant, the severing operation is performed so as to provide modules, each including a plurality of turrets rather than a single turret. The severing operation can be performed using a saw of the type commonly employed to separate individual semiconductor chips from one another in a wafer-dicing operation.

[0057] In the embodiments discussed above, the semiconductor chips are arranged to form images in response to visible light. However, the invention may be employed in systems which use ultraviolet and/or infrared light in addition to, or in lieu of, visible light. Therefore, as used in the present disclosure, references to light and/or optical components should be understood as not restricted to visible light.

[0058] A camera module in accordance with yet another embodiment of the invention (FIG. 15) includes a circuit panel 870 having a main dielectric layer 871 defining the top or front side 801 of the circuit panel, conductors 876 and a masking layer 803 defining the opposite, bottom or rear side 805 of the circuit panel. The circuit panel has a first hole 872 and a second hole 873 extending through it from its top side to its bottom side. Some of the conductors, such as conductor 876a define bond pads 806a exposed at the bottom side 805 of the circuit panel in the vicinity of the first hole 872. For example, bond pads 806a may be exposed through openings 807a in the mask layer 803. Other conductors such as conductors 876b define bond pads 806b exposed at the front surface 801 of the circuit panel as, for example, through openings 807b in dielectric layer 871. These bond pads may be disposed in proximity to the second hole 873. Still other conductors, referred to herein as "double-sided conductors" have bond pads 806a exposed at the bottom side 805 in the vicinity of the first hole 872, and also have bond pads 806b exposed at the front surface 801 of the panel. In the particular embodiments depicted, the circuit panel 870 has only a single layer of conductors extending in the vicinity of the holes, and this single layer forms all of the conductors and bond pads. However, this arrangement is not essential;

the circuit panel may be a more complex structure including plural layers of conductors and conductors with vertical elements extending towards and top and bottom sides, such as filled vias. These elements may form the bond pads exposed at the top and bottom sides. Also, the terms "top" and "bottom" or "front" and "rear" are used herein with reference to the circuit panel only to denote relative directions; the top or front surface and the bottom or rear surface face in opposite directions, but these directions may not be aligned with the gravitational frame of reference.

[0059] The assembly further includes a first set of camera elements 809. The first camera elements 809 include a first sensor unit 820 incorporating a first semiconductor chip 822 having a front surface with a first imaging area 828. In this embodiment, the first sensor unit 820 also includes a first cover 834 and first contacts 842 exposed at the outer surface 838 of the cover, *i.e.*, the surface facing away from chip 822. The first sensor unit 820 is disposed on the bottom side 805 of the circuit panel, with the first front surface and imaging area 828 of the chip, and the outer surface 838 of the cover facing in the forward direction, toward the bottom side. The statement that the sensing unit is "disposed on" a particular side of the circuit panel does not necessarily imply that the sensor unit abuts the circuit panel. Thus, there may be a space between the bottom side 805 of the circuit panel and the first sensing unit 820, and more particularly, between the bottom side of the circuit panel and the outer surface 838 of the cover. Conversely, portions of the sensing unit may project into the circuit panel or through the front surface of the circuit panel. However, the majority or all of the sensing unit is disposed to the rear of the circuit panel. The imaging area 828 of the first semiconductor chip is aligned with the first hole 872 in the circuit panel. The contacts 842 of the first sensor unit are bonded to bond pads

806a of the circuit panel, thereby connecting the imaging circuit (not shown) within chip 822 to certain conductors 876a and 876c of the circuit panel.

[0060] The first set of camera elements 809 also includes a first optical unit 850, which includes first optical elements 858 and a mounting structure or turret 854. The first optical unit 850 projects forwardly from the top or front surface 801 of the circuit panel, and is aligned with the first hole 872 and first imaging area 828 of unit 820. The first optical unit 850 desirably is mechanically engaged with the first sensor unit 820. For example, the first optical unit 850 may have rear elements similar to the rear elements 62 of the optical module discussed above with reference to FIGS. 3-5, and these rear elements may extend through apertures (not shown) in the circuit panel so as to engage the outer surface 838 of the cover. Here again, the engaged features of the optical unit and the sensor unit desirably hold the optical unit in position relative to the sensor unit independently of the position of these elements on the circuit panel.

[0061] The module further includes a second set of camera elements 811 and a second optical module 851. The second sensor module and second optical module may include features similar to those of the first sensor unit and first optical unit. However, the second sensor unit 829 is disposed on the top or front side 801 of the circuit panel, with the front surface and imaging area 831 of the semiconductor chip 823 in the second sensor module facing rearwardly, toward the top or front surface 801 of the circuit panel, and with the imaging area 831 aligned with the second hole 873 in the circuit panel. The contacts 843 of the second sensor unit are bonded to the bond pads 806b exposed at the front or top surface 801, thereby connecting the imaging circuit within the chip 823 of the second sensor unit to at least some of the conductors 876 of the circuit panel. As further discussed below, some of the contacts 843 of the second chip are connected to the same double-sided conductors 876c as some of the contacts 842 of the first sensor unit.

[0062] The second optical unit 851 projects rearwardly from the rear or bottom surface 805 of the circuit panel so that some of the optical elements such as lenses 859 in the second optical unit are disposed to the rear of the circuit panel.

[0063] A camera module in accordance with this embodiment provides a dual camera arrangement. Such an arrangement can be used, for example, in cellular telephones and similar devices where one camera is used to acquire an image of the user speaking into the cell phone, and another camera is used to acquire an image of a scene. The cameras may have the same properties or may have different properties. For example, the first set of camera elements may provide a relatively high-resolution image, whereas the second set of camera elements may provide a lower resolution image.

[0064] Mounting the two sets of camera elements in an arrangement such as that of FIG. 15, where the first set has the sensor unit to the rear of the circuit panel and the optical unit projecting to the front of the circuit panel, and the second set of camera elements has the reverse arrangement, with the second sensor unit to the front of the circuit panel and with the second optical unit projecting to the rear of the circuit panel provides a very significant reduction in the overall height or forward-to-rearward dimension of the assembly. In the arrangement of FIG. 15, the overall height H_0 is substantially less than the sum of the height H_1 of the first set of camera elements 809 and the height H_2 of the second set of camera elements 811.

[0065] Connecting some of the contacts on the two sensor units 820 and 829 to double-sided conductors 876c allows sharing of these conductors between the two sensor units. For example, power, ground and clock conductors can be shared in this manner. Also, conductors carrying picture signals can be shared provided that the two cameras are not required to operate simultaneously. Sharing conductors between the two sets of camera elements can simplify routing and reduce the cost of the circuit panel.

[0066] The arrangement of FIG. 15, with oppositely positioned sets of camera elements may incorporate any of the camera module structures discussed herein. For example, one or both of the sets of camera elements may include an optical module of the types discussed above with references to FIGS. 9 and 10, in which the optical module projects through a hole in the circuit panel, so that only a portion of the optical module projects on the side of the circuit panel opposite from the sensor unit.

[0067] A camera module in accordance with a further embodiment of the invention (FIG. 16) includes a sensor unit 920, depicted in broken lines, disposed on the bottom or rear side of a circuit panel 970. Here again, the imaging area of the chip in the sensor unit is aligned with a hole 972 in the circuit panel. The optical unit 950 in this arrangement includes a turret or support structure 952 having a mounting portion 902 arranged to hold one or more lenses or other optical elements 958. The support structure 952 also includes a plurality of rear elements 962 in the form of elongated posts projecting rearwardly from the mounting portion 902. These posts extend through apertures 974 in the circuit panel, and thus mechanically engage the sensor unit to position the optical unit relative to the sensor unit as discussed above. Here again, the posts define gaps between them as, for example, gap 963a between posts 962a and 962b. Here again, the circuit panel 970 may extend into the gaps, and hence may extend between the sensor unit and optical unit, which facilitates making connections to the sensor unit as discussed above. In the embodiment of FIG. 16, however, the gaps have substantial height. The height H_G of the gap in the completed assembly is equal to the height of the mounting element 902 above the front surface 901 of circuit panel 970. The height H_G desirably is on the order of 2 mm or more, more desirably 5 mm or more, and most preferably 1 cm or more. The width of each gap (*i.e.*, the horizontal distance, parallel to the circuit panel, between rear elements 962a and 962b) desirably also is at least about 2 mm, more desirably at least about 5 mm, and most desirably at least about 1 cm. As further discussed below, provision of such large gaps allows access into the area between the optical element and hole 972 for performing operations on the completed assembly. The large gaps, however, can be provided without increasing the overall height of the assembly. The distance between the optical elements such as lens 958 and the sensor unit is set by the optical properties of the system as, for example, the focal length of lens 958. Therefore, the lens must be supported at a substantial distance forward of the circuit panel in any event.

[0068] A module or assembly in accordance with the embodiment of FIG. 16 can be treated after assembly by performing operations on the sensor unit through the gap or gaps, and desirably also through hole 972 in the circuit panel. For example, the assembly may be subjected to a cleaning operation in which a cleaning fluid, a cleaning implement, or both are inserted into one or more of the gaps and through hole 972 to clean the surface of the sensor module. For example, where the sensor module incorporates a cover facing forwardly toward the rear or bottom surface of the circuit panel, the area of the cover aligned with the hole which includes the area aligned with the imaging area of the sensor chip can be cleaned. The ability to perform such a cleaning operation on the completed assembly counteracts the effects of contamination during the assembly process. This, in turn, can provide a higher quality camera unit, and also can allow some relaxation of the conditions applied during assembly to provide contamination. For example, a "clean room" environment may be unnecessary, or alternatively, a less expensive, lower-quality clean room may be used. In a further example, the sensor unit may not incorporate a separate cover, but instead may consist only of a "bare" semiconductor chip having an imaging area and having a passivation layer in the form of a thin coating effective to protect the elements of the bare chip from chemical or mechanical damage during the assembly process. Such a bare imaging chip typically requires very stringent precautions during handling to avoid deposition of dirt overlying one or more imaging elements. The requirements are somewhat less stringent for sensor units which incorporate a cover. However, by post-cleaning after assembly, the less stringent requirements may be applied to assembly of sensor units which do not include a cover.

[0069] In a method according to a further embodiment of the invention, the sensor unit may include a sacrificial layer overlying the front of the sensor unit as, for example, a sacrificial layer overlying the outer surface of the cover in a sensor unit which includes a cover, or a sacrificial layer overlying the imaging area of the chip in a sensor unit which does not include a cover. The assembly is fabricated with the sacrificial layer in place. The completed assembly is then subjected to an operation in which the sacrificial layer, or at least that portion of the sacrificial layer aligned with the imaging area of the sensor unit, is removed through hole 972 and through the one or more of the gaps 963 in the support structure 952. For example, the sacrificial layer may be removed by dissolving it, or by mechanically engaging it and peeling it away from the sensor unit. Removal of the sacrificial layer removes any contaminants which may have accumulated on that layer.

[0070] Other operations also may be performed through the gap or gaps. For example, a tool may be inserted into the gap or gaps to engage the conductors of the circuit panel and bond them to the contacts of the sensor unit. Alternatively, a wire-bonding tool may be used to provide wire bonds extending between the conductors and the sensor unit through hole 972, or through one or more of the additional apertures 974, or through other apertures (not shown) provided in the circuit panel for this purpose.

[0071] It is not essential to provide post-like rear elements in order to provide large gaps as discussed above. For example, the rear elements may be in the form of plates or ribs, or may have a form similar to the form of the rear elements discussed above with reference to FIG. 5, but with greater height. Also, it is not essential to provide multiple gaps; only one gap may be sufficient for some operations.

[0072] A camera module according to yet another embodiment of the invention (FIG. 17) includes a sensor unit 1020 having contacts 1042 disposed on the rear face of the sensor unit, *i.e.*, on the surface of the semiconductor chip 1022 opposite from the surface carrying the imaging area 1028. In this embodiment, the sensor unit also includes a cover 1034. Here again, the sensor unit is mounted with the front of the sensor unit, and hence, imaging area 1028 facing forwardly, toward the rear or bottom surface of a circuit panel 1070. The contacts 1042 of the sensor unit are connected by suitable leads or wire bonds 1002 to the conductors 1076. In this embodiment, the rear elements 1062 of the optical unit 1050 project through the same hole 1072, which is aligned with the imaging area 1028. Stated another way, hole 1072 is large enough to accommodate the light path from the optical element to the imaging area and also accommodate the rear elements 1062. A similar arrangement can be used with sensor units having contacts on the front face, as discussed above.

[0073] In the embodiments discussed above, the circuit panel has a hole extending through the panel in alignment with the imaging area of the sensor unit. Such a hole forms a transparent region in the circuit panel. In other embodiments, the circuit panel includes a solid but transparent region in alignment with the imaging area of the sensor unit. For example, the circuit panel may be formed from a transparent dielectric material, in which case the transparent region of the circuit panel may be provided simply by routing the conductors of the circuit panel so that no conductors cross the transparent region.

[0074] In a further variant, depicted in FIG. 18, the circuit panel which overlies the front surface of the sensor unit is formed from two separate sub-panels 1170a and 1170b. The two sub-panels extend over two different portions of the front surface 1138 of sensor unit 1120, and accordingly the sensor unit is disposed on the rear side of this circuit panel. The two sub-panels define a transparent region in the form of a gap 1172 between these sub-panels. Gap 1172 is aligned with the imaging region 1128 of the sensor included in sensor unit 1120. Thus, as used in this disclosure, unless otherwise specified references to a "hole," "opening" or "aperture" in a circuit panel should be understood as inclusive of gaps or slots defined between two or more sub-panels which cooperatively constitute the circuit panel. Also, in the embodiment of FIG. 18, the rear elements 1162 of the optical unit support structure engage portions of the sensor unit 1120 lying outside of the area covered by the circuit panel 1170a, 1170b. The module of FIG. 18 includes a base element 1101 extending behind the sensor unit 1120. The circuit panel 1170a, 1170b overlying the front surface of the sensor unit may be connected to the base element. The base element may be a circuit panel having conductive elements 1173, and the circuit panel 1170a, 1170b may include conductors 1171 which connect the sensor unit to these conductors.

[0075] Numerous other variations and combinations of the features discussed above can be utilized without departing from the present invention. Accordingly, the foregoing description should be understood as illustrating rather than as limiting the invention as defined by the claims.

CLAIMS:

1. A camera module including:

(a) a circuit panel having a top side, a bottom side and transparent region, said circuit panel having conductors; and

(b) a sensor unit disposed on the bottom side of said circuit panel, said sensor unit including a semiconductor chip having a front surface including an imaging area facing in a forward direction in alignment with said transparent region and an imaging circuit adapted to generate signals representative of an optical image impinging on said imaging area, said sensor unit also including a cover having a transparent area aligned with said imaging area, said cover overlying said front surface and being secured to said chip, said cover having an outer surface facing away from said chip and toward said bottom surface of said circuit panel, said imaging circuit of said sensor unit being electrically connected to at least some of said conductors of said circuit panel.

2. The module as claimed in claim 1 wherein said transparent region of said circuit panel includes a hole extending through said circuit panel.

3. The module as claimed in claim 1 wherein said sensor unit has contacts exposed at said outer surface of said cover and electrically connected to said imaging circuit of said chip, said contacts being electrically connected to said conductors on said circuit panel.

4. The module as claimed in claim 3 wherein said contacts are bonded to said conductors.

5. The module as claimed in claim 1 further comprising an optical unit including one or more optical elements, said optical unit projecting from said top side of said circuit panel.

6. The module as claimed in claim 5 wherein said sensor unit has one or more alignment features exposed at said outer surface of said cover, said one or more alignment features being in predetermined spatial relationship to said imaging area of said chip and said optical unit has one or more engagement features, and wherein said alignment features of said sensor unit are engaged with said engagement features of said optical unit so that the engaged features at least partially position said optical elements relative to said imaging area of said chip.

7. The camera module as claimed in claim 5 wherein said circuit panel has one or more apertures therein and at least some of said engagement elements of said optical unit, said sensor unit or both extend through said one or more apertures.

8. The camera module as claimed in claim 5 wherein said optical unit includes a turret supporting said optical elements and said turret defines said engagement features of said optical unit.

9. The camera module as claimed in claim 5 wherein said optical elements include at least one lens positioned forwardly of said circuit panel.

10. A method of treating a camera module comprising the step of performing an operation on a sensor unit including a semiconductor chip disposed on a bottom side of a circuit panel with an imaging area of the front surface of the chip facing in a forward direction toward the bottom side of the circuit panel in alignment with a hole in the circuit panel, said step of performing an operation including accessing said sensor unit through said hole.

11. A method as claimed in claim 10 wherein said camera module includes an optical unit projecting from the a top side of the circuit panel, the optical unit having one or more optical elements and at least one gap, and wherein said step

of performing an operation including accessing said sensor unit through said hole and through said at least one gap.

12. A method as claimed in claim 11 wherein said optical unit includes a plurality of rear elements spaced apart from one another and defining said at least one gap therebetween, said rear elements being engaged with said sensor unit, and wherein said rear elements maintain said at least one optical element in position with respect to said sensor unit during said step of performing an operation.

13. A method as claimed in claim 10 wherein said step of performing an operation includes cleaning a region of said sensor unit aligned with said hole.

14. A method as claimed in claim 13 wherein said sensor unit includes a cover overlying said front face of said chip, said cover having an outer surface facing in a forward direction away from said chip, said assembling step including positioning said sensor unit so that said outer surface faces toward said bottom surface of said circuit panel, said step of performing an operation including cleaning a portion of said outer surface aligned with said hole.

15. A method as claimed in claim 10 wherein said step of performing an operation includes removing a sacrificial layer overlying said imaging area of said chip.

16. A method as claimed in claim 10 further comprising the step of assembling said sensor unit and said optical unit with said circuit panel to form the camera module.

17. A module comprising:

(a) a circuit panel having a top side facing in a forward direction and a bottom side facing in a rearward direction;

(b) a first sensor unit including a first semiconductor chip having a first front surface with a first imaging area and having an imaging circuit, said first sensor unit being disposed on said bottom side of said circuit panel with said first front surface facing forwardly toward said bottom side of said circuit panel; and

(c) a second sensor unit including a second semiconductor chip having a second front surface with a second imaging area and having an imaging circuit, said second sensor unit being disposed on said top side of said circuit panel with said second front surface facing rearwardly toward said top side of said circuit panel.

18. A module as claimed in claim 17 wherein said circuit panel has a first transparent region in alignment with said first imaging area and a second transparent region in alignment with said second imaging area.

19. A module as claimed in claim 17 further comprising a first optical unit projecting forwardly from said top side of said circuit panel, said first optical unit including one or more optical elements in optical communication with said first imaging area of said first sensor unit.

20. A module as claimed in claim 19 wherein said first optical unit includes at least one lens disposed forwardly of said circuit panel.

21. A module as claimed in claim 19 further comprising a second optical unit projecting rearwardly from said bottom side of said circuit panel, said second optical unit including one or more optical elements in optical communication with said second imaging area of said second sensor unit.

22. A module as claimed in claim 21 wherein said second optical unit includes at least one lens disposed rearwardly of said circuit panel.

23. A module as claimed in claim 17 wherein said first optical module is mechanically engaged with said first sensor module so that such engagement positions the at least one optical element of the first optical module relative to said first sensor unit.

24. A module as claimed in claim 17 wherein said circuit panel includes conductors and said imaging circuits of first and second sensor units are electrically connected to at least some of said conductors.

25. A module as claimed in claim 24 wherein said first sensor unit includes a first cover having a transparent area overlying said first imaging area, said first cover having an outer surface facing away from said first semiconductor chip, said first sensor unit further including first contacts exposed at said outer surface, said first contacts being connected to at least some of said conductors.

26. A module as claimed in claim 25 wherein said second sensor unit includes a second cover having a transparent area overlying said second imaging area, said second cover having an outer surface facing away from said second semiconductor chip, said second sensor unit further including second contacts exposed at said outer surface, said second contacts being connected to at least some of said conductors.

27. A module as claimed in claim 26 wherein at least some of said conductors are double-sided conductors, each such double-sided conductor defining a first bond pad exposed at said bottom side of said circuit panel and a second bond pad exposed at said top side of said circuit panel, at least some of said first contact being bonded to said first bond pads, at least some of said second contacts being bonded to said second bond pads.

FIG. 1

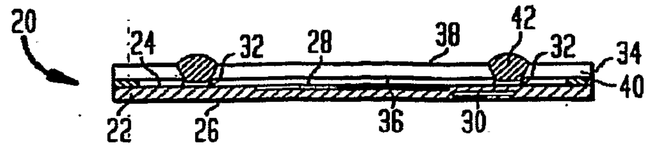

FIG. 2

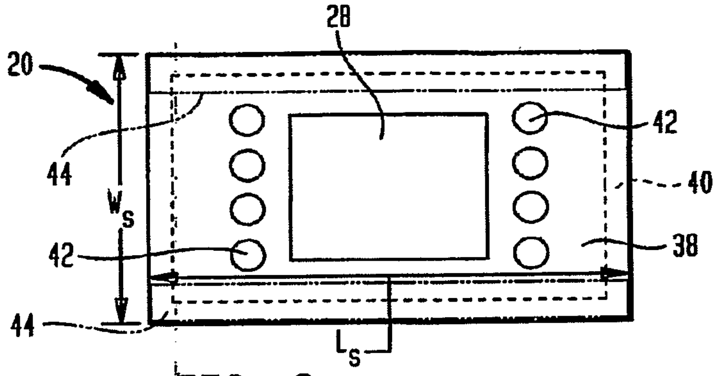

FIG. 3

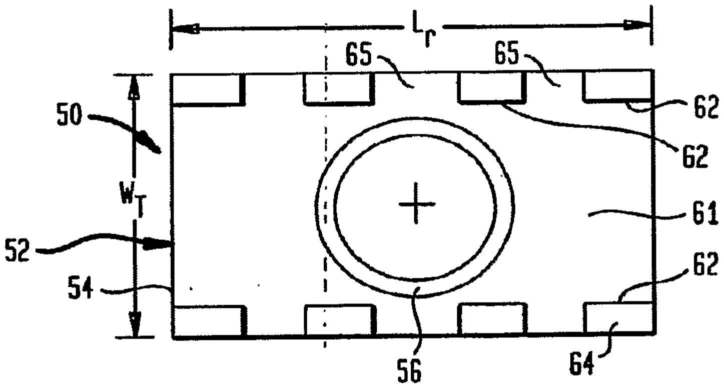

FIG. 4

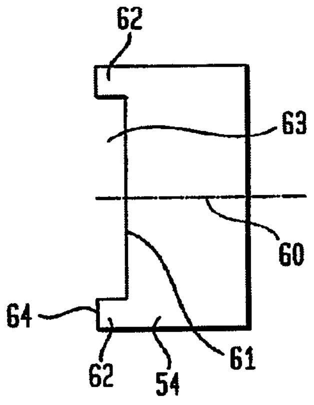

FIG. 5

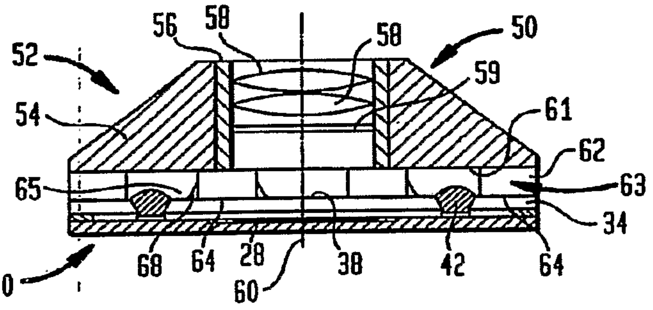

FIG. 6

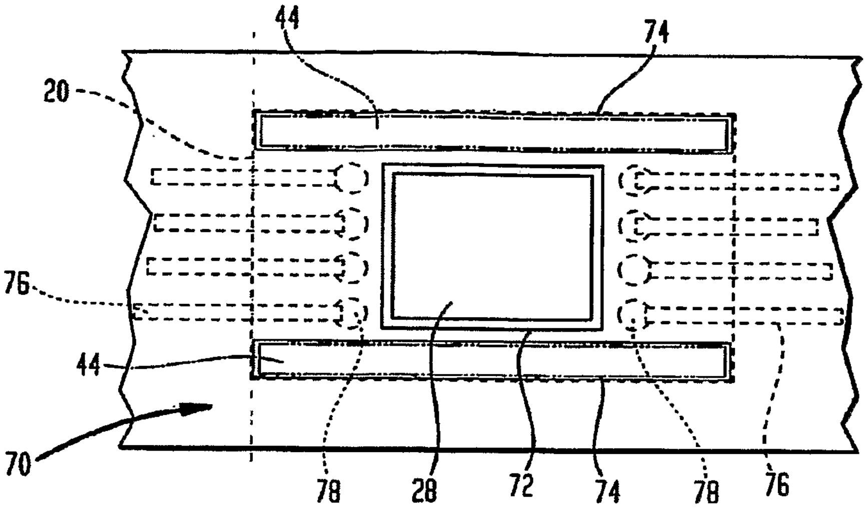
44
74
20
76
44
70
78
28
72
74
78
76

FIG. 7

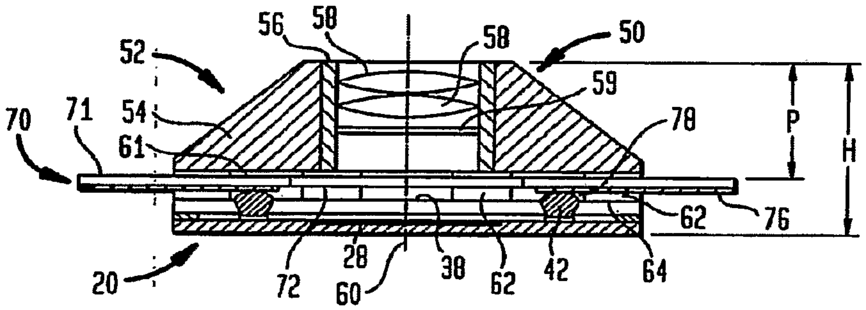
56
58
58
50
52
59
54
78
70
71
61
P
H
62
76
20
72
28
60
38
62
42
64

FIG. 8

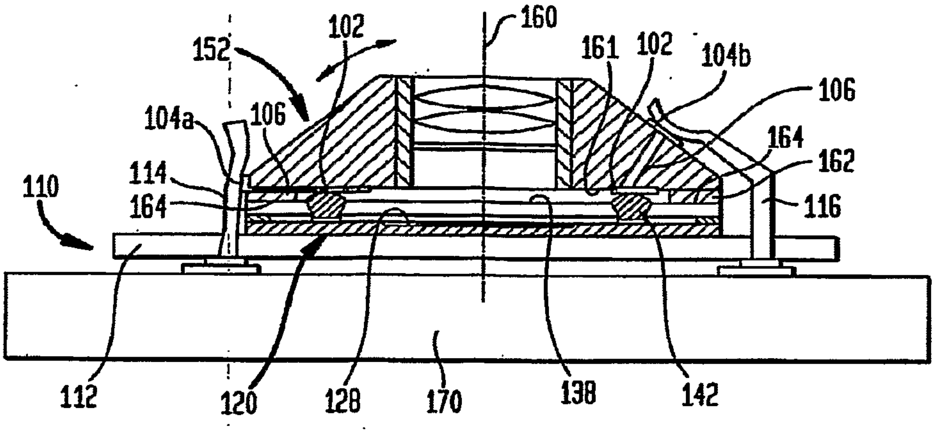

FIG. 9

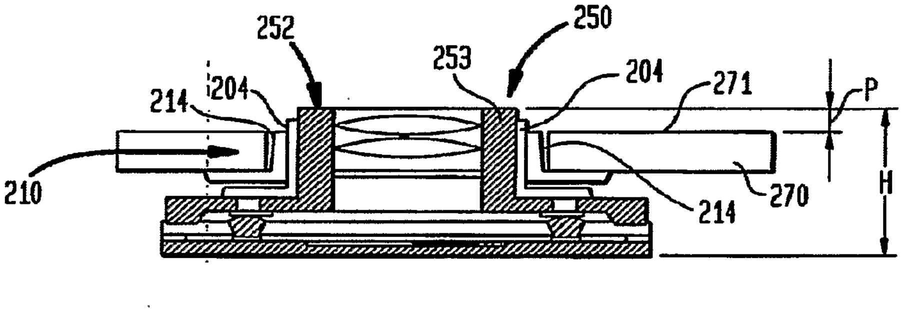

FIG. 10

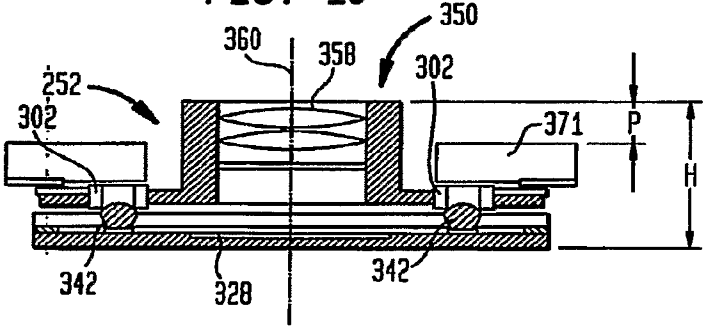

FIG. 11

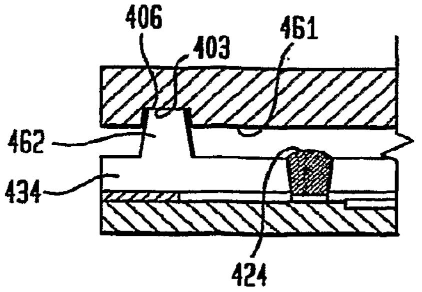

FIG. 12

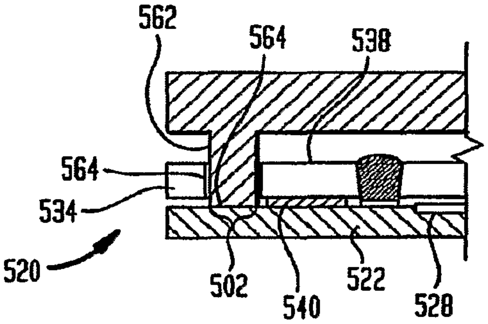

FIG. 13

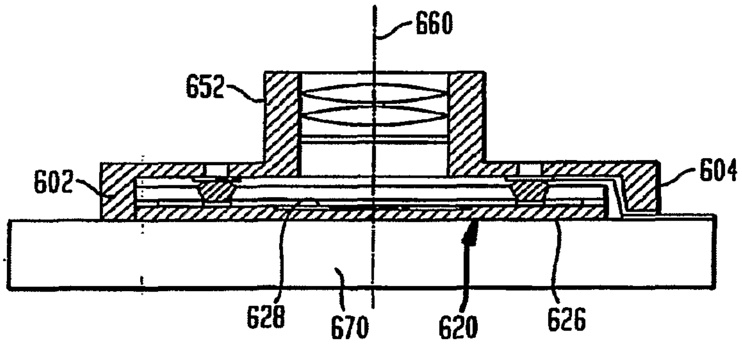

FIG. 14

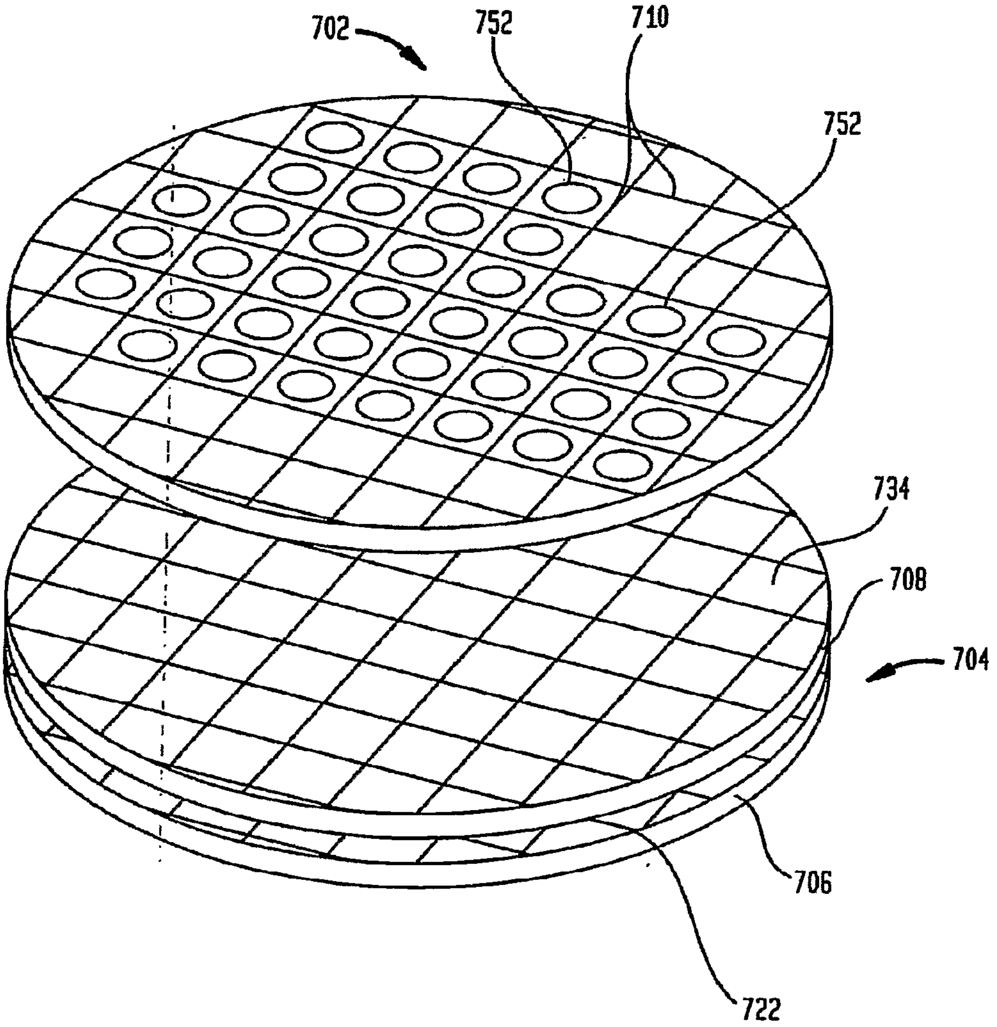

FIG. 15

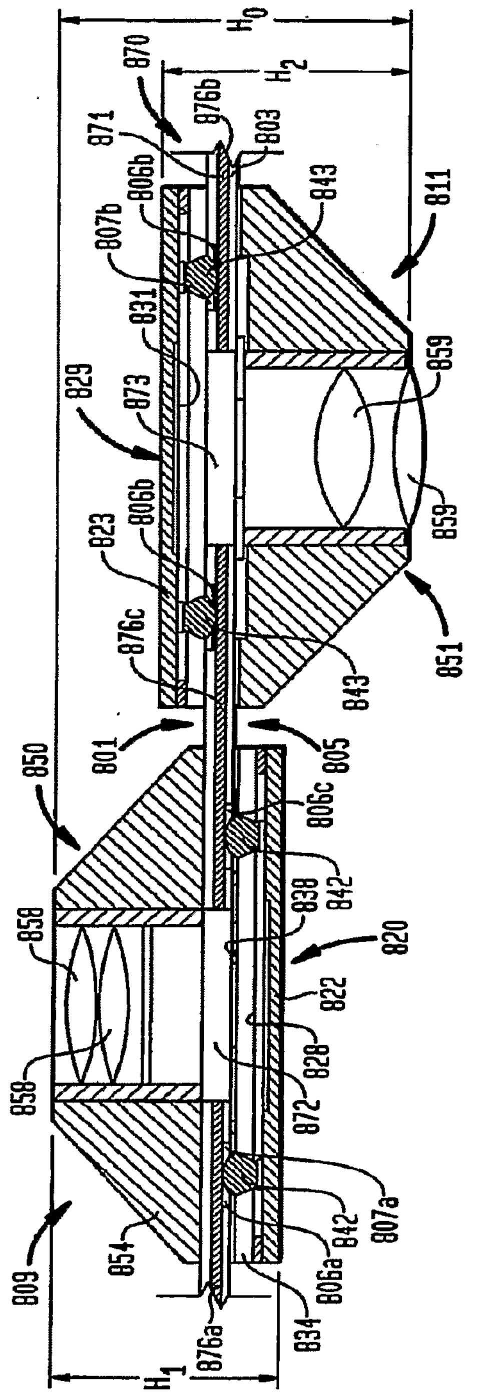
H0
H2
870
871
876b
803
806b
807b
843
811
831
829
873
859
859
823
806b
876c
843
851
801
805
850
806c
838
842
820
858
822
828
872
858
854
842
807a
809
806a
834
876a
H1

FIG. 16

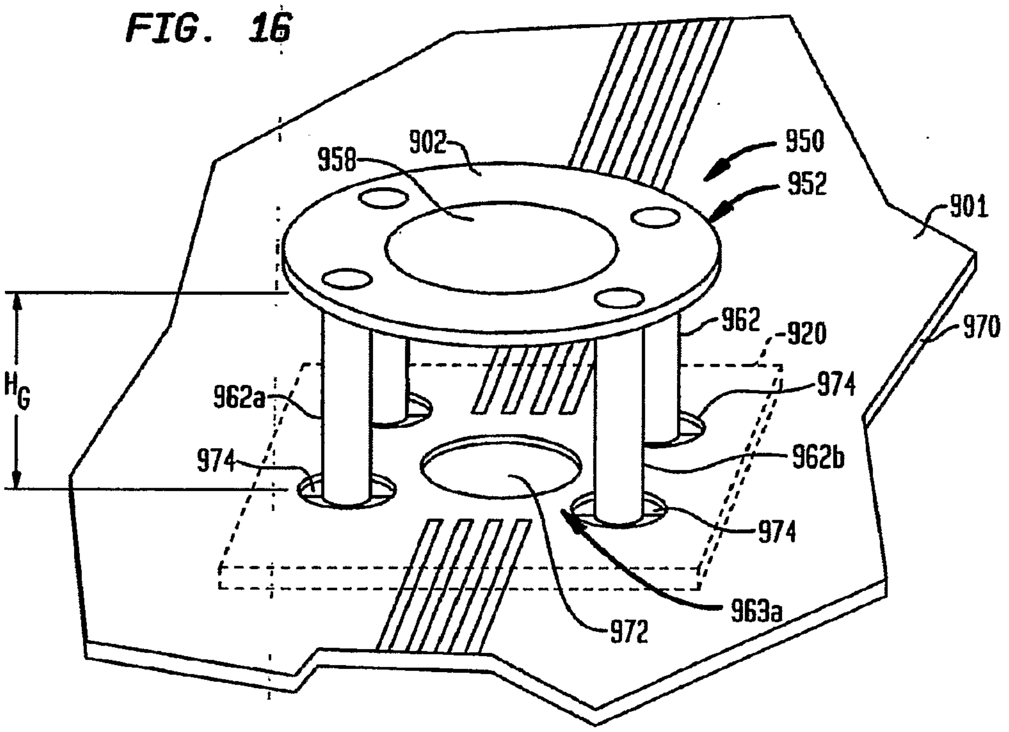
902
958
950
952
901
970
962
920
974
962a
974
962b
974
963a
972
H_G

FIG. 17

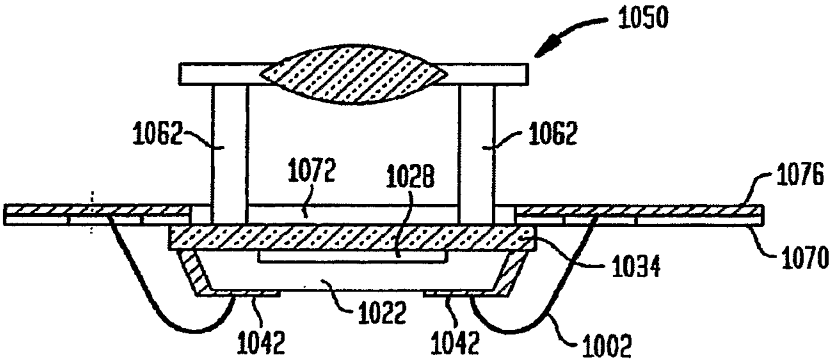
1050
1062
1062
1072
1028
1076
1070
1034
1022
1042
1042
1002

FIG. 18

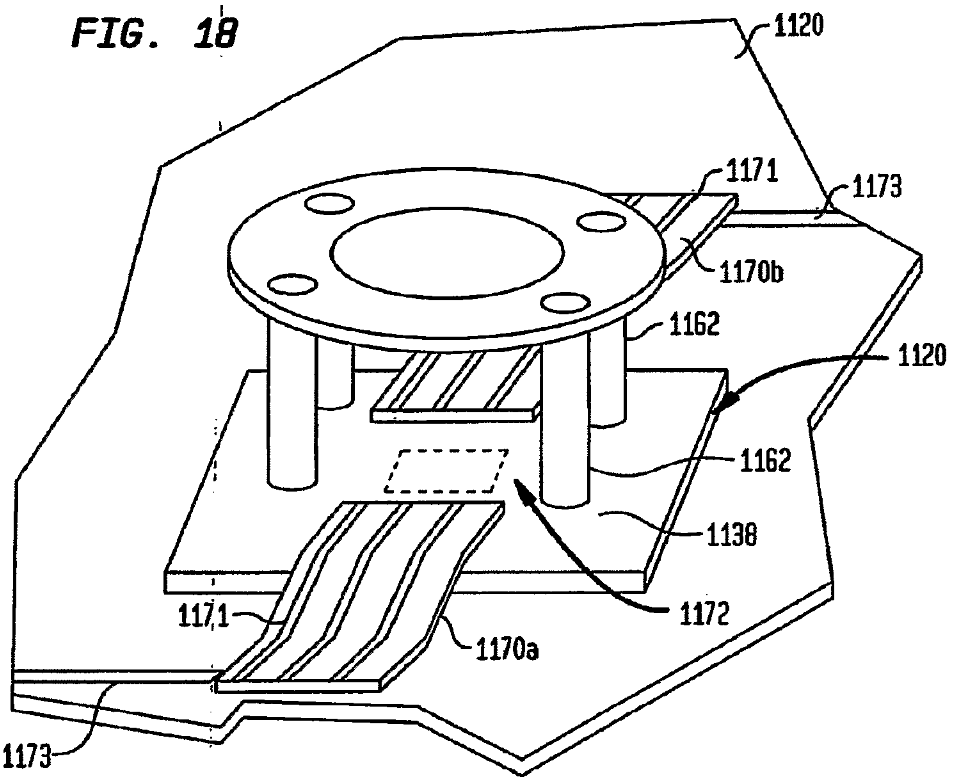
1120
1171
1173
1170b
1162
1120
1162
1138
1172
1171
1170a
1173

INTERNATIONAL SEARCH REPORT

International application No
PCT/US2006/042829

A. CLASSIFICATION OF SUBJECT MATTER
INV. H01L27/146

According to International Patent Classification (IPC) or to both national classification and IPC

B. FIELDS SEARCHED

Minimum documentation searched (classification system followed by classification symbols)
H01L

Documentation searched other than minimum documentation to the extent that such documents are included in the fields searched

Electronic data base consulted during the international search (name of data base and, where practical, search terms used)

EPO-Internal, WPI Data, INSPEC

C. DOCUMENTS CONSIDERED TO BE RELEVANT

Category*	Citation of document, with indication, where appropriate, of the relevant passages	Relevant to claim No.
X	US 2005/056769 A1 (CHEN WEN-CHING [TW] CHEN WEN CHING [TW]) 17 March 2005 (2005-03-17) paragraphs [0024] - [0027]; figures 3-6	1-5, 8-12,16
X	EP 1 475 960 A2 (FUJI PHOTO FILM CO LTD [JP]) 10 November 2004 (2004-11-10) figures 1-9	1,2,5, 7-12,16
X	US 2004/142539 A1 (KOIZUMI MASANORI [JP]) 22 July 2004 (2004-07-22) paragraphs [0133] - [0138], [0149]; figures 1,4,6,7	1,2,5, 8-12, 16-27
A	EP 1 148 716 A (MITSUBISHI ELECTRIC CORP [JP]) 24 October 2001 (2001-10-24) figures 22A-B	17

☐ Further documents are listed in the continuation of Box C.

☒ See patent family annex.

* Special categories of cited documents :

"A" document defining the general state of the art which is not considered to be of particular relevance

"E" earlier document but published on or after the international filing date

"L" document which may throw doubts on priority claim(s) or which is cited to establish the publication date of another citation or other special reason (as specified)

"O" document referring to an oral disclosure, use, exhibition or other means

"P" document published prior to the international filing date but later than the priority date claimed

"T" later document published after the international filing date or priority date and not in conflict with the application but cited to understand the principle or theory underlying the invention

"X" document of particular relevance; the claimed invention cannot be considered novel or cannot be considered to involve an inventive step when the document is taken alone

"Y" document of particular relevance; the claimed invention cannot be considered to involve an inventive step when the document is combined with one or more other such documents, such combination being obvious to a person skilled in the art.

"&" document member of the same patent family

Date of the actual completion of the international search 6 March 2007	Date of mailing of the international search report 13/03/2007
Name and mailing address of the ISA/ European Patent Office, P.B. 5818 Patentlaan 2 NL – 2280 HV Rijswijk Tel. (+31–70) 340–2040, Tx. 31 651 epo nl, Fax: (+31–70) 340–3016	Authorized officer Cabrita, Ana

INTERNATIONAL SEARCH REPORT

Information on patent family members

International application No

PCT/US2006/042829

Patent document cited in search report	Publication date	Patent family member(s)	Publication date
US 2005056769 A1	17-03-2005	NONE	
EP 1475960 A2	10-11-2004	CN 1551619 A	01-12-2004
		JP 2004335794 A	25-11-2004
		KR 20040095732 A	15-11-2004
		US 2004223072 A1	11-11-2004
US 2004142539 A1	22-07-2004	JP 3867785 B2	10-01-2007
		JP 2004134710 A	30-04-2004
EP 1148716 A	24-10-2001	CN 1330487 A	09-01-2002
		CN 1516283 A	28-07-2004
		JP 3607160 B2	05-01-2005
		JP 2001292354 A	19-10-2001
		KR 20010091053 A	22-10-2001
		NO 20011727 A	08-10-2001
		US 2001050721 A1	13-12-2001