Aug. 15, 1939. J. F. MOCK 2,169,921

STEEL RETAINER

Filed Jan. 8, 1938

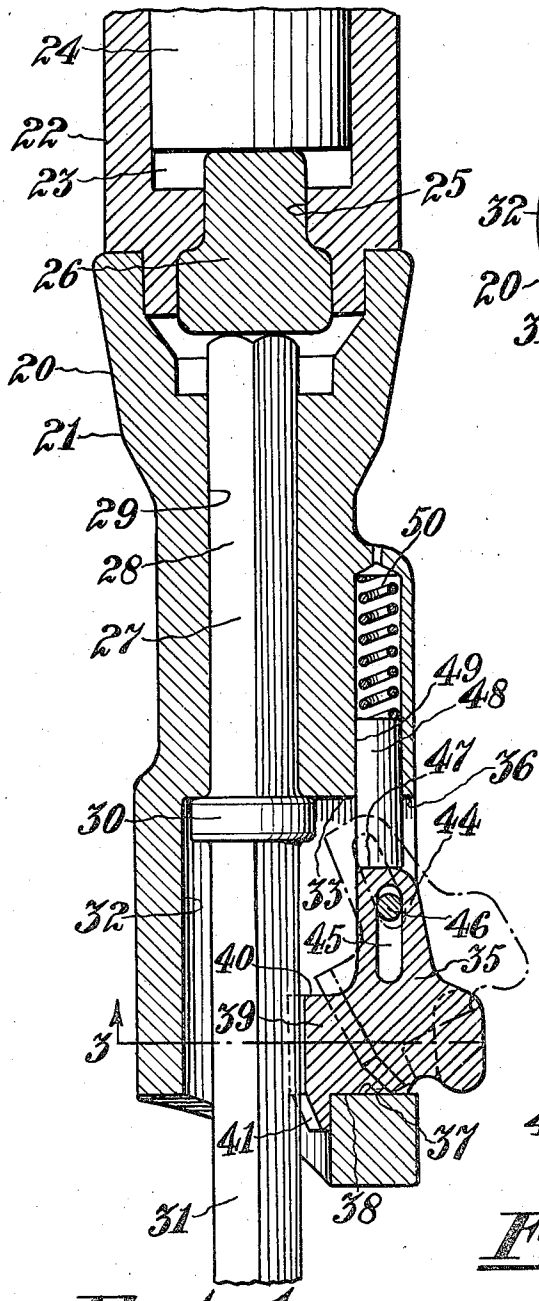

FIG.-1.

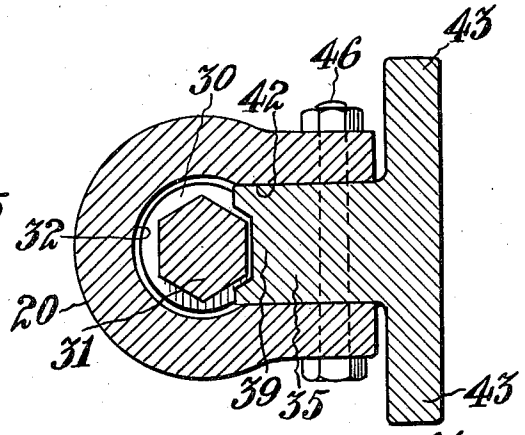

FIG.-3.

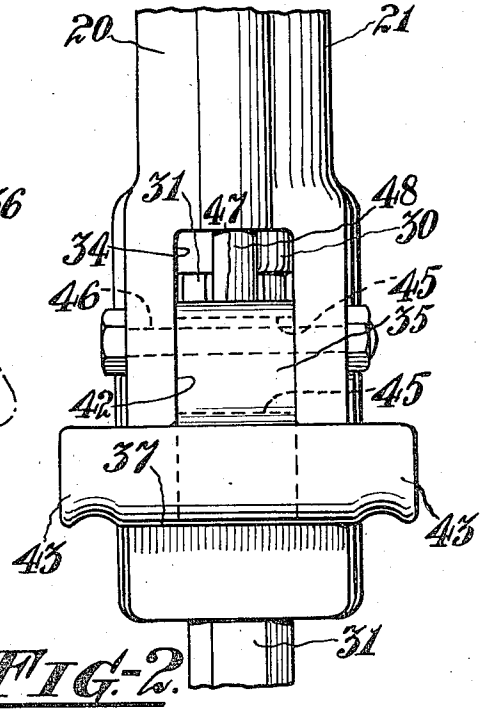

FIG.-2.

INVENTOR
John F. Mock
BY C. A. Adams
HIS ATTORNEY.

Patented Aug. 15, 1939

2,169,921

UNITED STATES PATENT OFFICE

2,169,921

STEEL RETAINER

John F. Mock, Phillipsburg, N. J., assignor to Ingersoll-Rand Company, Jersey City, N. J., a corporation of New Jersey

Application January 8, 1938, Serial No. 183,941

5 Claims. (Cl. 279—19.5)

This invention relates to rock drills, and more particularly to steel retainers for rock drills of which the working implement and the elements actuating it are capable of reciprocatory movement independently of each other.

One object of the invention is to assure the retention of the working implement in the rock drill.

Another object is to enable the working implement to be quickly inserted into or removed from the rock drill.

Another object is to equip the rock drill with a rugged retaining device capable of fully withstanding the severe usage to which it is subjected in practice.

Still another object is to minimize the number of parts that will be affected by the wear incident to the impact of the working implement against the retaining device.

Other objects will be in part obvious and in part pointed out hereinafter.

In the drawing accompanying this specification and in which similar reference numerals refer to similar parts,

Figure 1 is an elevation, partly in section, of the front end of a rock drill equipped with a steel retainer constructed in accordance with the practice of the invention,

Figure 2 is a side elevation of the retainer and the front end of a rock drill to which it is applied, and

Figure 3 is a transverse view taken through Figure 1 on the line 3—3 looking in the direction indicated by the arrows.

Referring more particularly to the drawing, 20 designates, in general, the front end of a rock drill comprising a front head 21 and a cylinder 22 which constitute casing parts of the rock drill and may be secured together in any well known manner.

The cylinder 22 is bored to form a piston chamber 23 containing a piston 24 of the reciprocatory hammer type which may be actuated by pressure fluid valved to the extremities of the piston chamber 23 by suitable valve mechanism (not shown). In the front end of the cylinder 22 is a bore 25 to receive, slidably, an anvil block 26 which transmits the blows of the hammer piston 24 to a working implement 27 of which the shank 28 is guided by a bore 29 in the front head 21 and abuts the anvil block 26.

The working implement 27 may be in the form of a drill steel having a collar 30, at the juncture of the shank 28 and the body portion 31 of the drill steel, which lies within an enlarged bore 32 in the front end of the front head and, in the fully retracted position of the drill steel, abuts the inner end surface 33 of the bore 32 to limit the distance which the drill steel may extend into the rock drill. The bore 32 is of ample depth so that the collar 30 is capable of a considerable degree of movement longitudinally of the front head without moving out of the bore 32.

In accordance with the practice of the invention, the front head is provided near its front end with an aperture 34 of rectangular shape which extends longitudinally of the front head and accommodates a retaining member 35 for retaining the working implement 27 within the front head. The rearward or upper end 36 of the aperture 34 preferably coincides with the end surface 33 of the bore 32 and the front end of the aperture lies perpendicular to the axis of the front head and constitutes a flat seating surface 37 for the retaining member 35 which, accordingly, is provided at its front end with a flat surface 38 to engage the seating surface 37.

The retaining member 35 has a portion 39 extending into the bore 32 into the path of movement of the collar 30 which, when the working implement 27 is projected forwardly, engages the rearward end 40 of the portion 39 and is thereby prevented from being expelled from the front head. The portion 39 partly encircles the working implement and on the front end thereof is a forwardly extending projection 41 which, in the retaining position of the member 35, lies against the surface of the bore 32 to prevent the retaining member 35 from being thrust out of the aperture 34 by the force of the working implement.

The retaining member is slidable in the aperture 34 of which the sides 42 serve as guides for the sides of the retaining member, and on the portion of the retaining member projecting exteriorly of the aperture 34 are grip members 43 which may be grasped by the operator for manipulating the retaining member into and out of the retaining positions.

Preferably the retaining member is attached to the front head 21 so that it will at all times be substantially in the correct position with respect to the elements wherewith it is normally associated. To this end an extension 44 is provided on the upper surface of the retaining member and has an oblong slot 45 through which extends a rod or bolt 46 which serves as a pivot for the retaining member and is secured to the front head. The uppermost end of the extension 44 constitutes a seating surface 47 for a plunger 48

arranged slidably in a bore 49 in the front head and urged against the surface 47 by a spring 50, also arranged in the bore 49.

In the operation of the drill, whenever it is desired to remove a drill steel from the front head the retaining member 35 is elevated in the aperture 34 by manual pressure applied to the grip members 43. The retaining member is thereby moved to a position in which the projection 41 may pass over the seating surface 37 to permit the retaining member to be tilted about the bolt 45 to a position corresponding to that illustrated by dot and dash lines in Figure 1. The portion 39 and the extension 44 will then be out of the path of the collar 30, and the working implement may be freely removed from the front head. After another drill steel has been inserted in the front head the retaining member is again placed in the retaining position in which the surface 38 seats upon the seating surface 37 where it will be securely held by the plunger 48.

The foregoing described retainer comprises only a few simple parts which may be cheaply constructed and possess the desirable qualities of durability and simplicity of operation. By seating the retaining member directly upon a portion of the front head the force of the impact of the working implement against the retainer will be applied only to such elements as are best capable of withstanding it.

I claim:

1. In a steel retainer, comprising in combination with a front head and a working implement having a collar, an aperture in the front head adjacent the working implement, a seating surface at one end of the aperture arranged perpendicular to the axis of the front head, a retaining member in the aperture seating upon the seating surface and extending into the path of the collar being slidable and tiltable into and out of retaining positions, and means for pressing the retaining member against the seating surface.

2. In a steel retainer, comprising in combination with a front head and a working implement having a collar, an aperture in the front head extending longitudinally thereof and having a flat seating surface at its front end arranged perpendicular to the axis of the front head, a retaining member slidable and tiltable in the aperture seating upon the seating surface, and a spring-pressed plunger to hold the retaining member against the seating surface.

3. In a steel retainer, comprising in combination with a front head and a working implement having a collar, an aperture in the front head having a seating surface at its front end, a retaining member in the aperture seating upon the seating surface and being slidable and tiltable in the aperture into and out of retaining positions, a pivot in the front head extending through the retaining member, and a spring-pressed plunger for holding the retaining member against the seating surface.

4. In a steel retainer, comprising in combination with a front head and working implement having a collar, an aperture in the front head having a seating surface at its front end, a retaining member in the aperture seating upon the seating surface and being slidable and tiltable in the aperture into and out of retaining positions, there being a slot in the retaining member, a pivot in the retaining member extending through the slot, a spring-pressed plunger in the front head to press the retaining member against the seating surface, and a grip member on the retaining member for manipulating said retaining member.

5. In a steel retainer, comprising in combination with a front head and working implement having a collar, a seating surface in the front head, a retaining member in the front head se ating upon the seating surface and being slidable and tiltable into and out of retaining positions, yieldable means for pressing the retaining member against the seating surface, and means on the retaining member interlockingly engaging the front head to maintain the retaining member in retaining position.

JOHN F. MOCK.