(12) INTERNATIONAL APPLICATION PUBLISHED UNDER THE PATENT COOPERATION TREATY (PCT)

(19) World Intellectual Property Organization
International Bureau

(43) International Publication Date
28 February 2019 (28.02.2019)

WIPO | PCT

(10) International Publication Number
WO 2019/039944 A1

(51) International Patent Classification:
E04B 1/04 (2006.01) *E04B 1/14* (2006.01)
E04B 1/08 (2006.01) *E04B 1/348* (2006.01)
E04B 1/12 (2006.01) *E04B 1/343* (2006.01)

(21) International Application Number:
PCT/NZ2018/050113

(22) International Filing Date:
23 August 2018 (23.08.2018)

(25) Filing Language: English

(26) Publication Language: English

(30) Priority Data:
734912 24 August 2017 (24.08.2017) NZ

(71) Applicant: **CONCRETE HOMES LIMITED** [NZ/NZ]; 51 Lamont Drive, RD 1, Whangarei, 0185 (NZ).

(72) Inventor: **WILSON, Paul**; 51 Lamont Drive, RD1, Whangarei, 0185 (NZ).

(74) Agent: **LUCAS, Jennifer**; 11 Bridgeview Road, Karaka, Auckland, 2113 (NZ).

(81) Designated States *(unless otherwise indicated, for every kind of national protection available)*: AE, AG, AL, AM, AO, AT, AU, AZ, BA, BB, BG, BH, BN, BR, BW, BY, BZ, CA, CH, CL, CN, CO, CR, CU, CZ, DE, DJ, DK, DM, DO, DZ, EC, EE, EG, ES, FI, GB, GD, GE, GH, GM, GT, HN, HR, HU, ID, IL, IN, IR, IS, JO, JP, KE, KG, KH, KN, KP, KR, KW, KZ, LA, LC, LK, LR, LS, LU, LY, MA, MD, ME, MG, MK, MN, MW, MX, MY, MZ, NA, NG, NI, NO, NZ, OM, PA, PE, PG, PH, PL, PT, QA, RO, RS, RU, RW, SA, SC, SD, SE, SG, SK, SL, SM, ST, SV, SY, TH, TJ, TM, TN, TR, TT, TZ, UA, UG, US, UZ, VC, VN, ZA, ZM, ZW.

(84) Designated States *(unless otherwise indicated, for every kind of regional protection available)*: ARIPO (BW, GH,

(54) Title: A MODULAR BUILDING SYSTEM

Figure 23

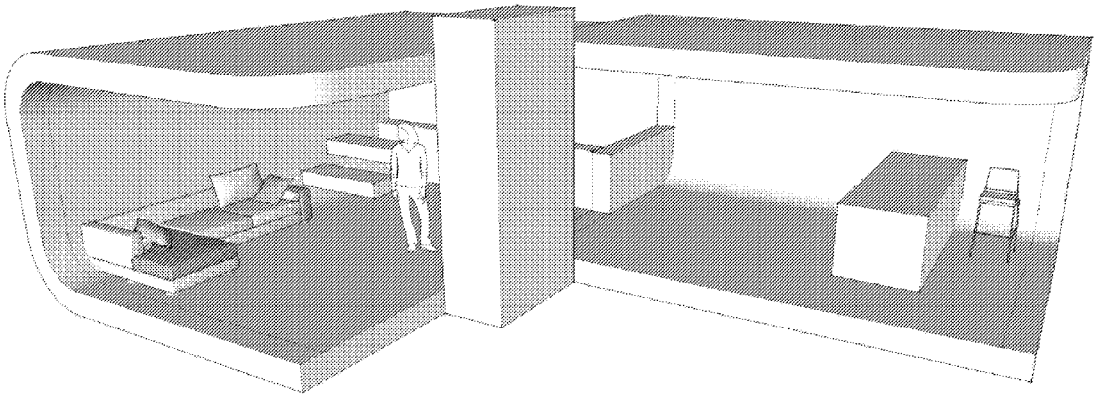

(57) Abstract: This invention relates to a versatile, modular building system for constructing a building frame. The components of the modular system are formed from high-density materials, and include one or more base units, one or more floor units connected to the base units, a plurality of end panel units, the end panels units connected to the base units and/or floor units, at least one front beam unit, the front beam unit adapted to connect to at least two end panel units, and one or more front panel units, the front panel unit adapted to connect to at least two end panel units and/or at least one floor unit. Also described are various additional modular units that may be incorporated into the modular building system described. The modular system is designed to be pre-fabricated off site and quickly erected on building sites with a range of contours.

WO 2019/039944 A1

[Continued on next page]

GM, KE, LR, LS, MW, MZ, NA, RW, SD, SL, ST, SZ, TZ, UG, ZM, ZW), Eurasian (AM, AZ, BY, KG, KZ, RU, TJ, TM), European (AL, AT, BE, BG, CH, CY, CZ, DE, DK, EE, ES, FI, FR, GB, GR, HR, HU, IE, IS, IT, LT, LU, LV, MC, MK, MT, NL, NO, PL, PT, RO, RS, SE, SI, SK, SM, TR), OAPI (BF, BJ, CF, CG, CI, CM, GA, GN, GQ, GW, KM, ML, MR, NE, SN, TD, TG).

Published:

— *with international search report (Art. 21(3))*

— *in black and white; the international application as filed contained color or greyscale and is available for download from PATENTSCOPE*

A Modular Building System

Field of Invention

This invention relates to a modular building system. More specifically, the invention relates to a modular building system for constructing a building frame made from high-density materials, and the component parts thereof.

Background to the Invention

There is a widespread need for the development of effective housing solutions that can be quickly and easily provided. Typically, houses or buildings that can be easily and quickly erected are constructed using lightweight materials such as timber, making them easy to transport, build partially off-site and are perceived to be cheaper to use than more solid, heavier materials. With such construction the focus is often on speed, rather than quality, as reduced build time results in cost savings in the short term, often at the expense of quality buildings that will have a long lifespan and less cost over their lifespan.

In addition to the above, the majority of timber used in building construction is chemically treated to improve the tolerance to moisture and increase durability. The impact chemical treatment has on the environment is a significant drawback to this method of construction.

The disadvantage with such buildings is that they are not constructed with the intention of having a long lifetime; timber construction can often result in leaks, in part due to the large number of components used and therefore the large number of joins and connections between the components; the reduced weight of materials reduces durability of the structure itself; and the lack of density in the overall structure reduces the thermal mass of the building, making it less temperature stable and more expensive to heat/cool.

There is considerable concern regarding the affordability of housing and this in part is driven by a shortage of skilled construction workers. Due to New Zealand's leaky building issues over the past decade, buildings and their water proofing systems have become very complicated and a licenced builder practitioner system has been put in place in order to try and control the high level of workmanship required to guarantee water tightness.

The desire of many building companies to produce a large number of houses as quickly as possible to improve profits in the short term also favours the construction of such houses on flat or relatively flat land. Building on slopes or difficult sites introduces complexity with typical mass produced houses and is often avoided, resulting in either land being deemed not suitable, or resulting in significant costs associated with the earthworks required to level sites before building can begin. It would be advantageous to develop a building system to overcome some of the aforesaid problems.

Object of the Invention

It is an object of the invention to provide a modular building system formed from high density materials.

Alternatively, it is an object to provide a number of building units formed from high density materials that can be used in the construction of a modular building frame.

Alternatively, it is an object of the invention to at least provide the public with a useful choice.

Summary of the Invention

According to a first embodiment of the invention, there is provided a modular building system for constructing a building frame, the system comprising a plurality of structural units including;

- one or more base units;

- a one or more floor units, the floor units connected directly or indirectly to the base units;
- a plurality of end panel units, the end panels units connected directly or indirectly to the base units and/or floor units;
- at least one front beam unit, the front beam unit adapted to connect to at least two end panel units; and
- one or more front panel units, the front panel unit adapted to connect to at least two end panel units and/or at least one floor unit;

wherein all units of the building system are formed from high-density materials.

In preferred embodiments of the system, the system further includes two or more elongate piles, the piles adapted to be directly or indirectly connectable to, or integrally formed with one or more base units to form a pile unit.

In further preferred embodiments the system further includes a balcony unit, the balcony unit, adapted to connect to one or more floor units, end panel units and/or front beam units.

In preferred embodiments the units of the modular building system are pre-fabricated prior to construction of the building frame.

Preferably, the units are formed from concrete.

Preferably, the units include pre-formed connection apertures for connecting adjacent units together.

According to a further embodiment of the invention there is provided a base unit for use in forming part of a building module, the base unit including;

- an elongate beam formed from high density material, the beam having at least one substantially planar surface.

According to a further embodiment of the invention there is provided a pile unit for use with the modular building system, the pile unit including two or more parallel spaced apart elongate piles, the parallel elongate piles spanned by one or more base units.

Preferably, the pile unit includes one base unit having an upper surface, the base unit mounted orthogonally to and spanning a space between of each of the two elongate piles, the upper surface of the base unit oriented such that in use, the upper surface of the base unit provides a substantially horizontal mounting surface and the two elongate piles are vertically connectable to the ground.

In one embodiment of the invention, the base unit spans the two elongate piles at a first end of the piles, such that in use, the piles extend only from the lower face of the base unit and are vertically mountable in the ground.

In an alternative embodiment of the invention, the base unit spans the two elongate piles at a point along the length of the piles, such that the piles extend through or from both the upper and lower faces of the base unit.

Preferably, the piles extend from the upper face of the base unit to form a wall support structure.

Preferably, the pile unit is integrally formed. Alternatively, the base unit and piles are connected together to form a pile unit.

Preferably, the upper mounting surface of the base unit(s) is substantially planar.

Alternatively, the base unit and/or upper surface of the base unit includes integrally formed connection means including one or more recesses, apertures, grooves, channels, flanges or ridges.

In preferred embodiments, the base unit spanning the spaced apart elongate piles is sized to overhang the piles in at least one direction.

According to a further embodiment of the invention there is provided a precast floor unit formed from high density materials for use with the modular building system, the precast floor unit including a substantially planar surface having an upper face and a lower face, and at least two side edges, the two side edges extending at right angles from opposing ends of the lower face of the planar surface of the floor unit.

Preferably, the precast floor unit has an “n” or “m” shaped cross section.

In other preferred embodiments, the floor unit includes one or more ribs, the ribs extending at right angles from the lower face of the planar surface. More preferably, the one or more ribs are parallel to the side edges and extend the partial or full length of the planar surface.

In preferred embodiments, the floor units have a substantially rectangular planar surface, and more preferably a 7m x 2.5m rectangle and are typically 0.4m or 0.5m in depth.

Preferably, the floor units include one or more adjustable support members mounted on the base of one or more of the ribs extending at right angles from the lower face of the planar surface. More preferably, the adjustable support members are screw jacks.

Preferably, the floor unit includes a pre-finished upper surface.

In further preferred embodiments, the floor units are adapted for connection to a storage bladder, the storage bladder located in a space defined by one or more ribs of the floor unit.

According to a further embodiment of the invention, there is provided an end panel unit formed from high density material for use with the modular building system of the present

invention, the end panel unit adapted to connect to one or more floor units, pile units and/or base units and shaped to define at least three sides of a wall structure.

More preferably, the end panel unit includes a lower beam adapted to connect to one or more floor units, pile units and/or base units, a side beam directly or indirectly connected to and extending from a first end of the lower beam at between 60° - 120°, and one or more upper beams directly or indirectly connected to and extending from an opposite end of the side beam at between 60° - 120°.

In further preferred embodiments the side beam extends at a substantially 90° angle from the lower beam.

In further preferred embodiments the end panel unit is substantially “C” shaped.

In preferred embodiments, the end panel unit is formed as a single piece construction.

Preferably, one or more sides of the end panel unit includes one or more rebates, recesses, channels, apertures or flanges.

More preferably, the end panel unit includes a guttering means in the form of an integrally formed channel extending the length of an exterior face of the end panel unit. Even more preferably, the integrally formed channel extends the length of an exterior face of the upper beam. Preferably, the channel is located such that when the front beam is mounted within a building, the channel opening faces upwards.

Preferably, the channel includes at least one open end to facilitate fluid connection to an adjoining channel on a different unit.

In further optional embodiments, the end panel unit includes a bracing means. Preferably, the end panel unit is “C” shaped and the bracing unit extends between an upper beam to a lower beam of the end panel unit.

According to a further embodiment of the invention there is provided an elongate front beam unit formed from high density material for use with the modular building system, the front beam including one or more rebates, recesses, channels, apertures or flanges and adapted such that in use, the front beam unit is connectable at each end to an end panel unit.

Preferably, the front beam includes a guttering means in the form of an integrally formed channel, the channel extending the length of an exterior face of the front beam unit. More preferably, the channel includes at least one open end to facilitate connection to an adjoining channel on a different unit.

According to a further embodiment of the invention there is provided a front panel unit formed from high density material for use with the modular building system, the front panel unit including a substantially rectangular planar first surface forming an exterior face of the front panel unit, the planar surface defined by two side walls, an upper wall and a lower wall, wherein the front panel unit is adapted to connect directly or indirectly to one or more floor units and/or one or more end panel units.

Preferably, the front panel unit includes one or more rebates, recesses, channels, apertures or flanges.

According to a still further embodiment of the invention, there is provided one or more pre-cast wall panel units adapted for connection to the building frame described above, the wall panel units formed from a high density material and a low density insulating material and having bolt on or quick fit connections to the end panel units, front beam units, front panel units, pile units and/or floor units.

Preferably, the wall panel units include a first inner layer formed of high density material and an outer layer formed of a low density material.

Alternatively, the wall panel units include a first inner layer formed of low density material and an outer layer formed of a high density material.

In a still further alternative embodiment, the wall panel units include a first inner layer formed of low density material sandwiched between two outer layers formed of a high density material. More preferably, the low density inner material is sandwiched between a high density inner layer having a greater thickness than the high density outer layer.

Preferably, the high density material is concrete and the low density material is polystyrene.

In further preferred embodiments, the wall panel unit is connectable to a side wall of the floor unit by a hinge mechanism, such that, in use, the wall panel unit is moveable from a first horizontal position on top of the floor unit, to a second vertical position substantially perpendicular to the floor unit.

According to a further embodiment of the invention there is provided a building frame, the building module formed from a plurality of structural units as described above.

According to a further embodiment of the invention, there is provided an edge protection system for use with the modular building system described above, the edge protection system including a rail support member adapted for attachment to an end panel unit or front beam unit; and a guard rail, the guard rail adapted for attachment to the rail support member.

Preferably, a rail support member includes an upright post and a down post, the upright post and down post connected offset and parallel to each other by a cross bar. More preferably, the cross bar is substantially perpendicular to the upright post and down post.

According to a further embodiment of the invention the building system includes a plurality of roof panel units, the roof panel units adapted to be connected to an adjacent roof panel unit and/or end panel unit and/or front beam unit of the building frame.

Preferably, the roof panel units are insulated, thermal backed roof panels.

According to a further embodiment of the invention there is provided a connection system for use with the modular building system described above, the connection system including a nut, bolt and at least one spacer adapted to centrally receive the bolt, the connection system adapted to fit a pre-formed aperture in a building unit.

More preferably, the entry point of the pre-formed aperture and the spacer are frustoconical in shape such that in use, the spacer locates into the pre-formed aperture, and the bolt is received through the centre of the spacer, into the pre-formed aperture.

More preferably, the connection system further includes a washer for mounting between two adjacent, connected units.

Even more preferably, the connection system includes one bolt, two nuts, four frustoconical spacers and one compressible washer for mounting between two connecting units.

According to a further embodiment of the invention there is provided a method for constructing a modular building frame from a plurality of structural units formed from high density material as described above, the method including the steps of;

- installing a one or more base units on or in a ground surface;
- connecting one or more floor units to the base units;
- connecting a plurality of end panel units directly or indirectly to the base units and/or floor units;
- connecting a front beam unit between at least two end panel units; and

- connecting a front panel unit to at least two end panel units and/or at least one floor unit.

According to a further aspect of the invention there is provided a method for constructing a high material density modular building frame on sloped or uneven terrain from a plurality of structural units formed from high density material as described above, the method including the steps of;

- installing a one or more pile units on or in a ground surface, the pile unit including a base unit supported by two or more elongate piles;
- connecting a plurality of floor units to the base unit;
- connecting a plurality of end panel units directly or indirectly to the base units and/or floor units;
- connecting a front beam unit between at least two end panel units; and
- connecting a front panel unit to at least two end panel units and/or at least one floor unit.

Preferably, the pile unit includes a base unit spanning the two elongate piles at a point along the length of the piles, such that the piles extend through or from upper and lower faces of the base unit and the method of installing includes vertically inserting the piles extending from the lower surface of the base unit into the ground.

More preferably, the method further includes the step of connecting a structural cross beam between the piles extending from the upper face of the base unit.

Further aspects of the invention, which should be considered in all its novel aspects, will become apparent to those skilled in the art upon reading of the following description which provides at least one example of a practical application of the invention.

For the purposes of this specification the term “high density building material” is intended to include a range of materials having a density of substantially greater than 800kg/m^3. Such materials include, but are not limited to concrete, metal or steel, cement, stone, aggregates, brick, glass and compacted earth.

The term “low density” or “low density building material” is intended to include a range of materials having a density substantially lower than 200kg/m^3. Such materials include, but are not limited to polystyrene, plasterboard, gypsum panel, fibreglass and plywood.

Brief Description of the Drawings

One or more embodiments of the invention will be described below by way of example only, and without intending to be limiting, with reference to the following drawings, in which:

Figure 1 shows two base units mounted on landing pads in one embodiment of the invention of the building system of the present invention, where the building is constructed on a substantially even or flat site;

Figure 2 shows the base units of the embodiment shown in Figure 1, the base units having three floor units mounted thereon;

Figure 2A shows a floor unit of indeterminate length having an “m" cross sectional shape with both ends open in one embodiment of the invention;

Figure 2B shows a floor unit of indeterminate length having an “m" cross sectional shape with one end open and one end closed in an alternative embodiment of the invention;

Figure 2C shows a floor unit of indeterminate length having an “n" cross sectional shape with one end open and one end closed in one embodiment of the invention;

Figure 2D shows a floor unit of indeterminate length having an “n" cross sectional shape with both ends open in an alternative embodiment of the invention;

Figure 2E shows a water bladder stored within the floor units of the modular building system in one embodiment of the invention;

Figure 3 shows an end panel unit with bracing according to one embodiment of the present invention;

Figure 3A shows an end panel unit with an internal bracing wall according to one embodiment of the invention;

Figure 4 shows a side perspective view of the base and floor units of Figure 2, with two end panel units connected to the base and floor units, and a front beam unit connecting the two end panel units;

Figure 5 shows a building frame incorporating the elements of Figures 1 – 4, the frame further including a front panel unit, side wall and rear wall units;

Figure 6 shows a perspective view of the building frame and side panels of Figure 5, Figure 6 further including a roof in one embodiment of the invention;

Figure 7 shows the building frame according to one embodiment of the present invention having wall panels with internal wall panel mass;

Figure 8 shows the building frame according to one embodiment of the present invention having wall panels with external wall panel mass;

Figure 9 shows the building frame according to one embodiment of the present invention having wall panels with both internal and external wall panel mass;

Figure 10 shows a perspective view of pile units formed from connecting piles and a base unit together as part of an alternative embodiment of the building system of the present invention, where the building system is constructed on a sloped site;

Figure 11 shows the pile units of Figure 10, with floor units mounted on the pile units according to one embodiment of the invention;

Figure 12 shows a partial frame as shown in Figure 11, including two end panels spanned by a front beam unit;

Figure 13 shows a front view of the partial frame of Figure 12 with a front panel unit mounted below the front beam unit according to one embodiment of the present invention;

Figure 14 shows a side perspective view of the building frame of Figure 13 showing the back panel cladding, piles and cross beam according to an embodiment of the invention;

Figure 14A shows a hinged floor unit and wall panel assembly according to one embodiment of the invention;

Figure 15 shows a side perspective view of the building frame as shown in Figures 10-14, including a balcony unit according to one embodiment of the invention;

Figure 16 shows two building frame modules stacked together in one embodiment of the invention;

Figure 17 shows a number of possible variations in end panel unit shapes that may be used in the present invention;

Figure 18 shows a connection mechanism adapted for use with the modular building system in one embodiment of the present invention;

Figure 19 shows an alternative connection mechanism adapted for use with the modular building system of the present invention; and

Figure 20 shows an exemplary roof structure using modular roof panels, soaker flashings and capping in one embodiment of the invention;

Figure 20A shows an example soaker flashing for use with the roof structure of Figure 20;

Figure 20B shows an alternative example soaker flashing for use with the roof structure of Figure 20;

Figure 21 shows a range of rail support examples for use with an edge protection system in one embodiment of the invention;

Figure 22 shows an edge protection system mounted on a building frame module in one embodiment of the invention;

Figure 23 shows an exemplary dwelling formed using the modular building system of the invention;

Figure 24 shows an alternative dwelling formed using the modular building system;

Figure 25 shows a further alternative dwelling formed using the modular building system;

Figure 26 shows a further alternative dwelling formed using the modular building system;

Figure 27 shows a mid-construction view of the modular building system of the present invention demonstrating and transportability of the system; and

Figure 28 shows a further example of a mid-construction view of the modular building system, incorporating roof joists in one potential embodiment of the invention.

Detailed Description of Preferred Embodiments of the Invention

The modular building system described herein is designed to provide a solid, long lasting building frame that can be manufactured and constructed in a short time frame with a reduced number of parts compared to known construction methods, as well as in a material that results in a low maintenance building having a high thermal mass and extended durability.

The modular building frame described here is formed from the connection of a range of structural units formed from high density building materials. The high density materials suitable for forming the structural units of the modular system may be selected from a range of materials having a density of greater than 800kg/m^3. Such materials include but are not limited to concrete, metal or steel, cement, stone, aggregates, brick, glass and compacted earth.

One of the most readily available, durable and flexible high density materials that can be used is concrete. Concrete is one of the preferred materials as it is stable, hard wearing, fire resistant, has good capacity for reducing noise, high strength and does not burn or emit toxic fumes. Concrete does not rot, warp or twist, which are characteristics often found with timber. Concrete is recyclable, water resistant and breathable and has excellent thermal mass.

Buildings constructed of concrete and other high density materials have a unique energy-saving advantage because of their inherent thermal mass. These materials absorb energy slowly and

hold it for much longer periods of time than do less massive materials. This delays and reduces heat transfer through a thermal mass building component, leading to fewer spikes in the buildings heating and cooling requirements, since mass slows the response time and moderates indoor temperature fluctuations. In addition, high mass buildings use less energy than a similar low mass building due to the reduced heat transfer through the high mass elements.

The concrete or other high density material used in the formation of the different units of the system may be reinforced concrete. During manufacture, each of the units may be reinforced using standard reinforcing materials such as rebar, steel, fibrous material including steel, synthetic, natural or glass fibres for example.

The modular building system is discussed in more detail below with reference to Figures 1 – 28 The figures demonstrate the individual components or structural units that make up the building system in one configuration, however it should be understood that the size and shape of the building frames that can be achieved using the structural units are limitless and the individual units may be modified in number, size and shape depending on the final design of the frame required.

The modular building system is designed to be used on both substantially flat and sloping terrain, with pile units being used as an additional component in the system particularly when the building site is sloped, or not substantially level. Figures 1, 2 and 4-6, 23, and 25 specifically demonstrate the use of the modular building system on a flat building site, with no pile units used, while Figures 10 – 14 and 15 show specific examples of the building system being constructed on a sloped site using pile units and cross beams to provide additional support. The use of pile units is not intended to be restricted to sloping site only however, and pile units may be used in any circumstances where addition building height is required, or addition structural support, regardless of the contours of the ground.

Figure 1 shows two base units 10 in the form of concrete elongate beams. When the building system is erected on flat ground as shown in Figure 1, base units 10 may be either cast directly in excavated trenches or can be pre-cast beams brought to site and optionally landed on

landing pads 5. The landing pads may include, but are not limited to rubber isolation mounts to protect the building during seismic events, reinforced concrete pads or screw jack mounts.

Base units 10 form the foundation for the building frame to connect to. Base units 10 will vary in number and size depending on the configuration of building frame being constructed. In preferred embodiments, base units 10 are typically formed with a depth of 1/12th their span, however these will be engineered to suit the final design and specific ground conditions.

Base unit 10 will be substantially levelled on upper surface 11 to enable a floor unit 30 to be mounted directly on the upper surface 11 of base unit 10 (see Fig 2).

In some embodiments, base units may not be required for the construction of the building frame, for example when the ground surface is suitably firm and level. However, the use of the base units provides additional strength and stability to the building frame in the majority of building situations.

In a preferred embodiment that enables construction of a range of dwelling configurations, floor units 30 are formed of reinforced pre-cast concrete 7m long and x 2.5m wide. This size floor unit makes the floor units a reasonable weight and size for ease of transportation and lifting. Future design efficiencies could allow these dimensions to be increased if required. Floor units 30 can be connected to each other using bolts to form wider floor units as seen in Figure 2.

In Figure 2, three floor units 30 are mounted side by side across two spaced apart base units 10 using quick assembly connections such as steel connection plates, brackets, bolts, anchors or grout filled connections. Floors 30 may also be connected to each other using similar connection means. Base units 10 may optionally rest on landing pads 5.

Floor units 30 include a substantially planar upper face 31 and lower face 32. Once floor unit 30 is mounted on upper face 11 of base unit 10 as seen in Figure 2, upper face 31 becomes the

floor of the building. Side edges 33 extend at substantially right angles from opposing ends of the lower face 32 forming side walls of the floor unit 30, while ends 35 and 36 are typically left open ended.

One or more ribs 34 extend at substantially right angles from the lower face 32 of floor unit 30, rib(s) 34 are preferably evenly spaced parallel to side walls 33 and provide added strength and spanning capacity to floor unit 30 and to allow for openings that may be used for stairways or a service access space that allows services to be retrofitted after the floor units 30 are installed. In preferred embodiments, the cross section of the floor unit 30 including the side walls and a central rib forms an “m” shape, with the side walls and ribs preferably deep enough to create a crawl space for retrofitting services and installing bolted connections during assembly of the structure on site.

Ribs 34 may be positioned in a variety of ways, for example running the full length or partial length of floor unit 30, parallel and/or orthogonal and/or diagonal to the side edges and may be a range of different widths and depths depending on the construction details and the spanning capacity required from the units.

Floor units 30 may be open at one or both ends between ribs 34 (for “m” shape) and side walls 33. When designed with one end closed, a wall is formed between side walls 33 and if present, ribs 34, meaning access to the crawl space between side walls 33 is from one end only. Figures 2A -2D show a sample of different examples of possible floor unit designs that may be utilised having both “m” (Fig, 2A, 2B) and “n” (Fig. 2C, 2D) shaped cross sections, with Figures 2A and 2D showing floor units with two open ends, and Figures 2B and 2C showing flooring units with one open end and one closed end.

Each of the floor unit designs provide a crawl space 37 that has a wide range of uses. As well as the immediate ability to bolt units together unseen from underneath during assembly on site and obvious access for installation and maintenance of services, the crawl space allows for access by remote-controlled all-terrain bogies which may be adapted to transport floor units to

building sites without the need for access roads to be constructed. Construction of access roads for building projects imparts a huge cost on the build. By enabling the floor units (and any further materials stacked on top of the units) to be moveable via the crawl space and easily placed in position, huge cost efficiencies may be attained.

Crawl space 37 also creates an insulation void for use of a rollout bladder 160 underneath the house as seen in Figure 2E. Bladder 160 can be connected to heat recovery pipework in the ceiling space, providing a huge amount of mass for thermal storage below the house, allowing the heat to naturally dissipate through the house. A preferred embodiment would be to utilise some form of glycol solution in the bladder which improves heat absorption and also prevents freezing in colder climates if the system is not being used. The volume of thermal mass within bladder 160 can be controlled to create the optimal thermal lag for a particular building, taking into consideration orientation towards the sun and the local climate for any particular season. Bladder 160 can be kept warm in the winter and cool in the summer. A heat source can easily be added to the bladder 160 to provide additional heating where needed.

Bladders 160 may also be utilised for other purposes such as grey and cold water storage. The accessibility of crawl space 37 means the bladders can be removed, refilled or replaced easily.

Floor units 30 may also include adjustable supports mounted on the base of ribs 34 to allow for levelling of the flooring units. In one example, screw jacks may be mounted at points on the rib bases, with individual screw jacks being independently moveable to ensure a completely level flooring system. This type of levelling system allows for readjustment of the building on it's foundations following events such as earthquakes where the contours or levels of the ground may change.

A further advantage of the pre-cast floor units of this system is that the floor units may be formed off site with a polished upper surface, providing polished concrete floor immediately on installation. This is a significant advantage over the common practice when concrete floors are

required, which is pouring the floor in-situ, then waiting a number of weeks before the concrete is sufficiently cured enough to be ground and polished. The grinding and polishing can be done at the factory by machines which offers considerable cost savings where quality and environmental controls are easier to implement. The floor units are flexible in use within the modular building system. They can be used with lightweight walls (Fig 14A) where the walls 70 cantilever from side walls 33 or used with heavy mass end panel units 40 (Fig 4). Utilizing pre-finished precast floor units negates the requirement for damp proof membranes on site. Damp proof membranes are difficult to design, specify and execute in practice and they have a limited lifespan.

Floor units 30 may be adapted to allow bladder 160 to be accessible from the upper surface 31 or ribs 34 of the floor unit. For example, apertures may be incorporated into the floor unit so pipes or hoses may extend through floor unit 30 to make the bladder contents accessible from other areas. Alternatively, apertures may include connection means mounted or formed directly within the floor unit to enable attachment of a range of connectors or valves. Such connection means will provide alternative access to the contents of bladder 160 to the under floor access, which may be useful for accessing the contents of the bladder from within the building, or if outside access is restricted due to environmental conditions or landscape contours for example.

As will be clear to a person skilled in the art, the size and configuration of the building and site will determine the number, size and position of the base or pile and floor units required to form a flooring structure for a particular building frame.

Figure 3 shows an end panel unit 40. End panels 40 form the side walls of the building frame and are adapted to be connected directly or indirectly to the base unit 10 and/or floor units 30. In preferred construction methods end panel units 40 are connected directly to the base unit 10 adjacent floor unit 30, enabling the end panel unit 40 to be secured to both the base unit 10 and one or more floor units offering immediate stability to the assembled structure.

End panel units may take a wide range of shapes and sizes (see Figure 17), with a preferred shape being a “C” shape that defines a lower wall 41, side wall 42 and upper wall 43 as seen in Figure 3.

The end panel unit is preferably formed as a single piece, reducing the risk of leaks between joints and minimising the build time associated with preparing and installing a multi-component frame for an end wall. Preferably, walls 41, 42 and 43 have a cross sectional size of between 350 mm x 200mm and 700mm x 600mm, with a preferred cross section being 500mm x 400mm. These dimensions are particularly suitable to be both aesthetically appealing and large enough to provide adequate surface area for fixings, connections and cladding to be connected on to. To achieve both of the above would make a full end panel too heavy to transport and assemble using normal means. Using a C shape panel minimises the volume of material required and the weight of the end panel can be kept within the normal operating range making transportation and handling easier and faster.

As less dense materials (the ideal being 1000kg/m3) are tested and accepted the volume of material in the end panels will be able to be increased.

In addition to acting as a frame for the wall of the building, end panel units 40 may include cast in recesses for guttering, typically in the form of an elongate channel 44 along the length of upper wall 43. When mounted on base unit 10, upper wall 43 and channel 44 are outside the living space, minimising the risk of water ingress in to the building. Channel 44 has an opening 45 which allows the channel to connect to an additional guttering channel on an adjacent unit or a rain scupper. Spigots could also be cast in to the channel for the connection of downpipes.

End panels 40 may also include any number of weather rebates, apertures, flanges or recesses 46 for joinery connections or structural connections on any surface that are required. In use, the end panel unit 40 forms the guttering, fascia and soffit of the building frame all in one. Waterproofing additives such as Xypex™ and coloured oxides added at the time of pouring may further negate the need for any other waterproofing membranes or surface treatments.

In some embodiments, end panel unit 40 may include a vertical bracing means 47. Bracing means 47 may be formed from concrete, steel or other high density material and provides an attachment means for other units, cladding and/or joinery, as well as supporting the walls 41 and 43 in their separated positions. In other embodiments, space 48 defined by walls 41-43 may be reduced by increasing the width of any of the walls. In such designs where the walls require less structural support due to their size and the overall shape of the end panel unit 40, bracing 47 may not be required, or may be located in a different position or angle, as would be appreciated by a person skilled in the art.

An internal bracing wall 49 can be used to provide additional structural support to end panel unit 40, as well as acting as an interior wall. Figure 3A shows an example of bracing wall 49 positioned substantially perpendicular to end panel unit 40, and mounted on floor unit 30. The bracing wall 49 can be bolted directly to the end panel unit 40 on the day of assembly and can be bolted to a floor unit 30 from the underside, gaining access from the crawl space that the floor unit creates.

Figure 4 and 5 build on the partial building frame shown in Figures 1-2 and includes end panel units 40 mounted against the outer edges of floor units 30 and connected to base units 10 and further includes a front beam unit 50. Front beam unit 50 takes the form of an elongate beam adapted in size to span a distance between two end panel units 40.

As with other units, the front beam unit 50 is preferably precast off-site from concrete and sized to fit the spaces required for a particular frame design.

Front beam 50 may include a guttering means (seen in Fig 5 and 12) in the form of integrally formed channel 52 on upper surface 51 of beam 50. Channel 52 includes open channel ends 53, such that when mounted between the upper beams 43 of end panels 40, channels 44 and 52 are fluidly connected.

Front beam 50 may also include any number of weather rebates, apertures, flanges or recesses for joinery connections or structural connections on any surface that are required.

Figure 5 shows the partial building frame of Figure 4 including front panel unit 60. Front panel unit 60 may be precast from concrete and sized to fit the spaces between end panel units as required for each specific frame design. As with front beam unit 50, front panel unit may extend between two end panels 40 and includes a substantially rectangular front planar surface 61 and rear planar surface 62 that provide a monolithic look to the building as well as acting as a partial wall. The front and rear surfaces 61, 62 are defined by side walls 63, 64, upper wall 65 and lower wall 66. Front panel unit 60 may include any number of weather rebates, apertures, flanges or recesses for joinery connections or structural connections on any surface or wall as required. Front panel 60 does not need to be cast as a single element as panel 60 can be supported in a number of places either from floor units 30 or by end panels 40 or a combination of both.

When in use as shown in Figure 5, front panel unit 60 is connected to brace members 47 of end panels 40 and floor units 30 using known connection means.

Rear wall 70 as seen in Figure 5 may be a bolt on or quick fix slender cladding that may include easily removable connection means to allow access to the building frame structure for maintenance and service purposes, upgrades and future extensions to the building.

Figures 5 and 6 further show the building frame of the present invention having side wall panels 80 which are discussed in more detail below and with reference to Figures 7-9. While wall panel 80 is exemplified in Figures 5 and 6, it should be understood that the wall panel may be replaced by alternative wall panel structures 90 or 100 as described below.

Figures 7-9 show a number of different examples of non-structural cladding that may be incorporated as wall panels into the building frame of the present invention.

As with back panel 70, all non-structural cladding and wall panels may be formed as pre-cast units again having bolt on or quick fit connections to the end panel units, front beam units, front panel units, base units, pile units and/or floor units.

Such panels may include but are not limited to panels having a layered structure. In the example of Figure 7, the wall panel 80 includes a first inner layer 81 formed using a high density material such as concrete, with an outer layer 82 formed from a low density insulating material such as extruded polystyrene. By using extruded polystyrene and concrete in this configuration the wall is already considered to be weathertight and any subsequent exterior cladding need only be a rain shield which does not typically require a licenced building practitioner (LBP) and can be installed by the owner or a non LBP tradesman. More importantly it will allow more use of recycled materials and provide the homeowner with more choice.

Figure 8 shows an alternative wall panel 90 in a reverse configuration from wall panel 80, wall panel 90 having a high density outer layer 91 and inner polystyrene core 92. Installation of a wall panel having this configuration provides a weatherproof outer core, leaving the interior wall linings to be added in due course without requiring any additional functionality for weatherproofing.

Figure 9 shows a third wall panel configuration 100 where a polystyrene core 102 is sandwiched between an inner high density panel layer 101, which has the thickest concrete layer of the panel and outer high density panel layer 103. This configuration provides excellent durability and weatherproofing to the outside and a high thermal mass to the inside of the building.

The embodiment of the invention discussed above is particularly suited to substantially flat building sites where base units 10 can be laid directly on the ground, or via landing pads. When a building site is sloped, the building system of the present invention incorporates pile units into the modular building frame to manage the changing height of the ground on which the system is mounted. In other scenarios the use of pile units with the building system may occur when the site is substantially flat and additional strength is required, or for multi-storey

buildings on substantially flat sites. It should be appreciated that while sloped sites is a particularly suitable use for the building frame with pile units, these are not restricted to use with such sites and may be incorporated in any building system where required. The building systems may also include a combination of base units mounted on or in the ground, together with pile units.

Figures 10 – 14, 15 show an example of an alternative embodiment of the invention where the building frame is constructed on a sloped site (or when a greater building height is required). The majority of the modular components remain the same as described above, with the additional use of pile units to compensate for the sloped ground, or to raise the building height.

Figure 10 shows three separate pile units 20, vertically mounted across a sloped site. Pile units 20 are formed from base units 10 integrally formed with or connected to at least two precast elongate piles 21.

Elongate piles 21 may be formed from any high density material, but as with other units are preferably formed from reinforced concrete and more preferably pre-cast off site and then mounted on site in a short time period. The piles 21 may have a range of different cross sectional shapes such as round, square, rectangular, triangular or other cross section that would be understood to form a pile having sufficient strength and may be reinforced using known techniques.

The pile units 20 shown in Figure 10 are formed with base unit 10 orthogonally spanning two or more elongate piles 21. When elongate piles 21 are inserted into the ground 3 as shown in Figures 10 and 11, with elongate piles 21 substantially vertical, the upper surface 11 of base unit 10 is substantially horizontal.

Depending on the positioning of a pile unit 20 within the building structure, piles units 20 may be formed, as shown by arrow A, with a single base unit 10 forming an upper mounting surface, the base unit 10 supported by two elongate piles 21 extending orthogonally from the lower

face of the base unit 10. This formation allows floor units 30 to be mounted on and connect to upper face 11 of pile unit 20 shown by arrow A.

When pile units 20 are to be used in a position where the elongate piles 21 can provide additional structural strength, for example (but not limited to) below the rear wall of a building, they may take the form indicated by arrow B. Pile unit 20 indicated by arrow B includes two elongate piles 21 spanned by base unit 10. Elongate piles 21 extend from the lower surface of base unit 10 to provide connection to the ground 3, and upwardly from upper surface 11 of base unit 10 to provide additional strengthening to the building frame, with piles 21 being dimensioned so as to extend to the height of the building wall or any other height as required.

In preferred configurations piles 21 extend upwardly from base unit 10 to create additional wall framing or connection means for non-structural cladding. In some embodiments, the elongate piles 21 are adapted to support a cross beam 25 mounted parallel to the base unit across the upper surfaces 22 of the piles 21 to further strengthen the building frame. An example of a steel cross beam 25 supported by piles 21 can be seen in Figure 12.

The positioning of base units 10 relative to each other on adjacent pile units 20 allows for the mounting of floor units 30 substantially horizontally across a sloping site. As seen in Figure 11, a number of floor units 30 may be mounted across two different pile members shown by A and B. Floor units 30 are mounted to the base unit 10 on pile unit A and the base unit 10 on pile unit B, the position of the base units 10 and heights of the pile units 20 being specifically predetermined to ensure floor units 30 can be mounted substantially horizontally.

The size of the elongate piles 21 and base units 10 will vary depending on a number of factors, including but not limited to the load bearing requirements of the building, the size and number of flooring units 30 and/or end panel units 40 to be mounted on the base units 10 and the type of ground the structure is being built on.

In one example of a preferred embodiment, elongate member 21 is 300mm wide in direction Y (Fig 10) (or has a 300mm diameter), with base unit 10 having a width of 600mm in the same direction. This difference in size between the base unit and the elongate pile provides a 150mm base unit side overhanging ledge on each side of the elongate pile 21, which provides additional strength and coverage of reinforcing materials, as well as providing a significant upper surface area on the base unit on which floor units or other structural units may be mounted. The ledge also allows space for connection means between the base unit 10 and any other mounted units. Using the preferred connection means of bolt fixings between units, the ledge provided by the wider base unit 10 allows space for the connections mean to be mounted from the underside of the base unit, keeping the fixings hidden from view, and away from the edges of the concrete. Fixings mounted too close to the edge of any unit can result in spalling, which damages both the look and structural integrity of the unit.

Base unit 10 is also preferably sized to overhang elongate piles 21 at one or both ends of the base unit 10. The end overhang (corbel) may be the same at both ends of the base unit 10, but may also differ depending on where the pile unit 20 is to be placed in the structure. For example, a pile unit 20 designed for use at the edge of a building may have a small base unit corbel on the interior end of the base unit 10, and a larger base unit corbel on the exterior end of the base unit 10. For example, this would provide additional room for an end panel unit 40 to be mounted on the base unit 10 at the exterior side of the pile next to a floor unit 30 that may not be required at the opposing end of the base unit 10.

Elongate piles 21 may be precast as continuous reinforced beams or columns, with base units 10 integrally formed with the elongate piles during the casting process. While this method of manufacture saves both time and increases durability due to the reduced number of connections, the base unit 10 and elongate piles 21 may alternatively be formed separately and connected together using known connection means such as bolts, grouting connections, anchors, brackets, and other known connection means.

Adopting the above method of construction allows the piles to be placed in one site visit for a simple dwelling, or in a matter of days for a larger, more complex dwelling.

Figure 12 shows the building frame of the present invention showing a plurality of floor units 30 mounted on pile units 20, which are mounted into ground 3 across a sloping site. End panel units 40 are mounted on and connected directly to the base unit 10, as part of pile unit 20, at either end of the plurality of floor units 30, with end panels 40 connected across the front face by front beam 50.

In contrast with the building frame shown in Figure 4 which was erected on a flat site with base units 10 placed on the ground, the frame shown in Figure 12 incorporates the base units 10 as part of pile units 20, allowing the base units to be placed at any required height to suit the land contours. In such configurations, elongate piles 21 extend from the upper face of base unit 10 (not shown here) on which floor units 30 rest to function as strengthening members for the rear wall of the frame. Elongate piles 21 may also provide a supporting structure for cross beam 25. Cross beam 25 is preferably formed from steel, and is mounted between adjacent end panel units 40 and connected to upper surfaces of elongate piles 21, forming an additional frame support between the floor units, pile units and end panel units.

Figure 13 shows the incorporation of front panel unit 60 to the building frame in a similar fashion to that described above with reference to Figure 5. Front panel unit 60 may be formed in a range of different heights depending on the look of the building required and is connected to brace members 47 of end panels 40 and floor units 30 using known connection means.

Both Figures 13 and 14 show the building frame having a number of wall panels, including rear wall panel 70. Rear wall panel 70 as seen in Figure 14 may be a bolt on or quick fix slender cladding that may include easily removable connection means that provide connection to the cross beam 25, elongate piles 21, floor units 30, end panels 40 or a combination of one of more of the above. Given the strength of the building frame, non-structural wall panels such as rear

wall panel 70 may be easily removable, allowing access to the building's core structure for maintenance purposes, retrofitting of services, upgrading or future addition of extra modules.

Various types of wall cladding that may be used with the system of the present invention were discussed earlier with reference to Figures 7-9. Wall panels incorporating one or more of these wall panel designs can be seen at various locations on Figures 13 and 14, enclosing the frame and defining spaces for joinery to be fitted.

In an alternative embodiment as shown in Figure 14A, floor units 30 and wall panels 70 may be connected by a pivot assembly, which allows a safe and simple way to raise wall units into position, being particularly advantageous for a solo builder typically using lightweight wall units. By connecting floor units 30 and wall panel units 70 into a pre-fixed assembly prior to the wall being raised, the correct placement of the wall can be assured.

When connected to a floor panel via a hinge assembly, the wall panels 70 may optionally be adapted at the base to include recesses or apertures 73 that allow hinges 72 to be mounted a distance above the base of wall panel 70. Alternatively, hinges may be mounted directly to the inner surface of the wall and the corner of the floor unit. The hinges are mounted such that the wall panel unit is moveable from a first position where it lies horizontal on top of the floor units 30, to a second position where it is rotated substantially 90 degrees to a substantially vertical position perpendicular to the floor unit. By mounting hinges 72 at a distance above the base of wall panel 70, wall panel 70 is prevented from being raised and tilted substantially more than 90 degrees from horizontal, as base 74 of wall panel 70 acts as a barrier by abutting side wall 33 of floor unit 30 when wall panel 70 is in an upright position. This feature helps to both ensure correct wall positioning and improve safety for the builder during construction.

In further variations, wall panel units may be connected to other structural units or faces of the modular building system using the hinge assembly described above. Walls may be connected at the side, upper or lower edges as required to create cantilevered units of a variety of configurations.

Further structural units such as balcony units may be added to the building frame as shown in Figure 15. Balcony units 68 may be cantilevered and bolted on to the existing building structure via one or more floor units, end panel units and/or front beam units. As with other structural units, balcony unit 68 may include any number of weather rebates, apertures, flanges or recesses for joinery connections or structural connections on any surface or wall as required. The ability to connect a balcony structure to an existing frame at any stage allow it to be cast off-site, reducing costs, as well as removing it an at time should repairs and maintenance or future additional modules or extensions be required.

The building frame formed by the combined use of the range of structural units described above may be manufactured entirely off-site as pre-cast units, then transported to the building site and erected in a very short period of time when compared to traditional timber framed houses. Once erected, the building structure provides a sound base structure to which a range of different design features, cladding and joinery may be added.

Figure 16 shows an example of a building frame produced using the modular system of the present invention and demonstrates the particular advantages the system has when constructing a building on a sloping site. In the example shown by Figure 16 it can be seen how spaced apart pile units 20 of differing heights support floor units 30 of two separate building layers. The spacing of the pile units 20 is such that a first building module 200 may have a second building module 300 stacked above it, a second end of end panel units 40 of the upper module 300 resting directly above and on top of a first end of end panels 40 of module 200. Such independent modules may be designed to interconnect in a range of different configurations, with internal connections between the modules facilitated through openings in the floor units 30 and wall panels.

As can be seen in Figure 16, the shape of the end panels 40 has a significant influence over the overall look and design of the final frame and therefore building as a whole. Figure 17 gives a sample range of examples of end panel units having varying shapes that alter the building

frame shape. The flexibility of design with the end panel units provides the user a limitlessly wide scope for artistic design of this element while the unit remains connectable to the other elements formed to standard pre-engineered sizes and specifications.

In the majority of the examples, the end panel unit is substantially "C" shaped, with a side beam or side edge 42 extending from a first end of a lower beam 44 at between 60° - 120°, and one or more upper beams 43 directly or indirectly connected to and extending from an opposite end of the side beam 42 at between 60° - 120°. In a majority of the preferred embodiments the side beam extends at a substantially 90° angle from the lower beam, however all end panel units are shaped to result in a structurally sound frame.

The corners of end panels 40 may be curved or angled or use combinations thereof. Many of the illustrated end panels 40 include at least one substantially right angle corner. While these and other units of the system are preferably pre-cast as single units, certain shapes or sizes may be formed in a number of pieces and connected together on site in order to achieve the desired shapes the building requires.

Connecting the different components of the modular structure can be achieved by using a self-locating bolt through system that secures adjacent structures together. While conventional bolt systems will work, the addition of a flexible, resilient spacer between the adjacent members being connected will create a thermal break between units if this is required but will also improve flexibility of the building between the elements by deforming and expanding, during seismic events. A material such as neoprene is particularly suited for use in this application due to its flexibility, relative inertness and weatherproof properties, as well as being a cost effective product that can be readily replaced within the building structure if necessary. In regions where building standards require connections to be rigid and for buildings to be anchored to the ground, rigid grouted connections may be used. However, the use of sliding foundations or flexible mounts with other flexible connections and controlled points of failure is the preferred type of connection for use with the current invention.

A material with a typical hardness of around shore A80 is particularly suitable for this purpose. In the event of an earthquake or other ground movement, the washers and/or spacer will take up the force of minor movement, with the bolt being the next point of failure. A series of units bolted together in this manner would absorb movement of the land through the connection mechanism, reducing the risk of cracking or breaking of the more brittle prefabricated concrete units.

In addition to the flexible spacers absorbing small movements, the connection mechanism becomes self-locating as well as increasing the area of shear created between the building elements by pre-forming connection apertures within the building units. Connection apertures may be standard circular apertures, or may have tapered (or otherwise shaped) entry ports to receive a bolt and a correspondingly shaped flexible washer or spacer. Examples of two such self-locating connection systems are seen in Figures 18 and 19.

Figure 18 shows adjacent floor units 30 connected by a bolt 77 extending through pre-formed adjacent apertures 78 in each floor unit 30 and fastened with nut 79. Apertures 78 extend through the side walls of floor units 30 and are formed with a frustoconical shaped openings 74 at each entry point. Openings 74 receive frustoconical shaped spacers 75 which sit in openings 74 surrounding bolt 77 and provide a compressible material, preferably neoprene, to absorb the force of small movements through the bolt. Neoprene washer 76 is located between each side wall of floor units 30 to support small movements between the adjacent units.

Figure 19 shows a similar connection mechanism as Figure 18, however the embodiment shown in Figure 19 includes frustoconical shaped openings 74 on the connecting surfaces of the floor unit side wall, but standard circular apertures on the outward facing surfaces of the side walls. Frustoconical spacers 75 are utilised with the corresponding apertures, while neoprene washers 76 are used on the outward facing surfaces under nuts 79.

Following construction of the building frame, a suitable roofing system may be connected to the upper beams 43 of the end panel units 40 and/or front beam 50 by utilising the recessed

gutters as connection points for both roofing panels and flashings. Such roof panels may be formed from insulated thermal panels for example, or other known roofing materials that are available in panel form. A wide range of size and shapes may be used depending on the design features of a particular building.

Figure 20 shows an example of modular roofing panels 140 installed and connected to front beams 50 and adjacent roof panels using bolt through connections (not shown). Soaker flashings 141 may be installed over adjacent connecting guttering edges to direct water flow and prevent water ingress, and are mountable within the recesses 52 of front beam 50. Similarly, soaker flashings 141 may be easily connected at other locations using the recessed upper beams for attachment, as can capping sections 142, which are mountable over soaker flashings 141.

Capping sections 142 may extend the length of the guttering (not shown) and cover any areas of connection between separate modular units in the roofing structure. For example, capping 142 may be mounted over connections between roof panels 140, roof panel to beam connections or beam to beam connections.

Figures 20A and 20B show examples of soaker flashing in two different configurations for mounting within recess 52. Figure 20A shows a soaker flashing 143 for use within a recess having a unit (roof panel or otherwise) connected to a single side of recess 52 and is formed with a substantially planar face 144, side flanges 145 and single end flange 146 adapted to extend under a corresponding capping section 142. Figure 20B shows soaker flashing 147 for use within a recess 52 having units connected on both sides of the recess, as shown in Figure 20, where soaker flashing 141 spans recess 52 having a roof panel unit 140 connected to a first side of recess 52 and an adjacent beam 50 connected to the opposite side of recess 52, with soaker flashing 147 formed with a substantially planar face 144, side flanges 145 and end flanges 146 at each end of soaker flashing 147 adapted to extend under corresponding capping sections 142 at either end of soaker flashing 147.

Figures 21 and 22 show an edge protection system that is attachable for use with the modular building system of the current invention. As seen in Figure 22, the edge protection system comprises a series of rail supports 120 together with a guard rail 127. Rail supports 120 are adapted to be mounted around the upper beam 43 of end panels 40 or front beam units 50 and extend upwardly from the top of the upper beam 43 or front beam 50 where they collectively support a guard rail 127. In use, rail supports 121 are hooked over the outer upper edge of beams 43 or 50, and may be mounted from below by raising rail support 120 by holding down post 123 and hooking over the guttering of either beam, or alternatively, mounted from above by lowering rail supports 120 onto the gutter edges.

Three different styles of rail support 120A, 120B and 120C are exemplified in Figure 21. Each support includes an upright post 121 having a first end extending in an upward direction to form a vertical barrier and act as a mount for a guard rail and a second end 122 adapted to extend into the recessed guttering or channels 44, 52 formed in top edge of upper beam 43 and/or top edge of front beam 50. Upright post 121 is supported to retain an upright position within channel 52 (for example) by cross bar 128 which extends , preferably at substantially right angles, from an upright post 121 and in use, abuts the top edge of upper beam 43 or front beam 50. Cross bar 128 connects at the opposing end of cross bar 128, preferably at substantially right angles to down post 123, which extends in a downward direction from cross bar 128, substantially parallel to, but offset from upright post 121.

Down post 123 may be formed in a variety of lengths as shown by rail supports 120A, B and C. Rail support 120A shows a support having a comparably shorter down post 123 extending part-way down the edge face of front beam 50. Rail support 120B shows down post 123 extending the length of edge face of front beam 50 to connect to a second cross bar 124 partially extending across the bottom face of front beam 50. Second cross bar 124 provides additional stabilisation to rail support 120B and is optionally adapted to be directly connected to front beam 50 using a connection means 125, which may take the form of a screw clamp or bolt, enabling the entire rail support 120B to be securely fixed into position on front beam 50. In other embodiments, the distance between cross bars 128 and 124 may be formed so as to

exactly fit around the guttering of front panel 50, without the additional of connecting means 125, allowing gravity to maintain the rail support in position.
Rail support 120C exemplifies a further option for the rail support shape, with comparably longer lower post 123. The longer lower post 123 enables a user to easily mount rail support 120C in position over guttering of front beam 50 whilst safely standing at ground level, using lower post 123 as a handle to raise rail support 120C into position on the roof as seen in Figure 22. It is envisaged either one type of rail support will be used on a single building system, or a combination of the different rail supports depending on the height, length and situation the edge protection system in being used in.

It should also be noted that the edge protection system may be modified in design while still retaining the main features of being connectable to front beam 50 or upper end panel beams 43 of the building system. For example, in Figure 22, upper posts 121 are not offset from lower posts 123, but form a single post that connects to a guard rail 127 at a first upper end and extend downward from and optionally under guttering of front panel 50 and/or end panel 40, with cross bars 128 and optionally 124 connecting the post to a guttering system.

Guard rail 127 seen in Figure 22 may be connected to upper edges of rail supports 120 by known techniques, such as bolts, screws, clip-fit connections or friction fit connections. The type of connection means may be decided based on the most suitable means for the size, weight or and materials used to create the edge protection system.

The edge protection system provides a simple and more cost effective alternative to traditional scaffolding by engaging directly with the guttering of the upper beams 43 of the end panels 40 or the front beam 50. The strength of the high density material guttering or channel, for example a concrete guttering or channel, allows it to be used as a stable base for connection of the edge protection system, with significant weight capable of being supported due to the solid construction of the beams.

As further examples, figures 23-26 show a range of different building structures that may be formed using the modular building frame system of the present invention.

The method of constructing the building frame of the present invention requires a number of steps, but is a significant advantage over other building methods in that the construction of the building frame can occur in a matter of days.

In practice, the design and layout of the building frame with respect to the land on which it will be erected is predetermined and the individual structural units precast for direct transport to the site.

On sloped sites, the building frame is preferably built up a hill, rather than down a hill in order to maintain balance in the units as the build progresses.

One of the significant advantageous with the construction of this modular building system is the ability to transport the building materials easily to sites that may not have access roads built, or that are located on uneven or remote land. Figure 27 shows an example of construction materials located at a build site prior to construction. To transport the materials, floor units 30 may be stacked with typically lightweight wall panel 70 or roof panel units or bladders 160 for example, then manoeuvred into position by the use of powered all-terrain bogies 170 having built-in jacking capabilities. These powered bogies access the crawl space beneath floor units 30, raise the unit, together with any loaded materials and position them where needed for construction. As can be seen in Figure 27, a wide range of materials can be transported in this manner, making significant time savings compared to standard road access transport methods.

The following construction method will be described with reference to a frame erected on a sloped site, but the same method can be applied when the frame is erected on flat ground without pile units.

In a first construction step for mounting the building structure on a sloped site, holes are augured into the ground and one or more pile units 20 are concreted into the ground at the desired spacing such that the horizontal base units 10 of the pile units 20 are accurately positioned to receive floor units 30. When piles are in place, the upper surfaces of the base units 10 in the pile units 20 are levelled to create a substantially horizontal mounting surface (see Fig 11).

Following placement of the pile units 20, floor units 30 are laid across the pile units 20, each floor unit spanning two or more pile units 20 such that the floor unit is supported at a first end by the base unit of one pile unit A and a second end by the base unit of another pile unit B. To maintain stability when laying floor units 30, central floor units are placed, followed by outer floor units 30. Once floor units are in position, they are connected to each other and the base units 10 using bolts or other suitable connection means (see Fig. 12).

Following placement of the floor units 30, end panels 40 are placed at the edges of a number of floor units to form the frame for the outer walls. End panels 40 are rested on their lower surface on base units 10, the inside edge of the end panel 40 directly adjacent the edge of the outer floor unit 30. Once correctly position, the end panels 40 are bolted to both the adjacent floor unit 30 and base unit 10 on which they rest (Fig. 12) and bolted to the ends of cross beam 25. It is intended that insulation with a high compressive strength is placed between the floor units and any external components to create a thermal break to the living space.

At this point any front panels and the front beam 50 can be added as can any required roof bracing. Any such bracing can be immediately tensioned.

The front beam unit 50 is directly connected to the upper edges of the end panel 40 (Fig.12). The connection of the front beam unit 50 to the two end panel units 40 also fluidly connect any guttering system 52, 53 running along the top surface of the end panel units and front beam unit.

Once the front beam unit 50 is connected, a front panel unit 60 is mounted below the front beam unit to provide a front face to the frame. The front panel unit 60 is connected to the floor units 30 and the bracing members of the end panel units 40. Depending on the design of the end panel units 40, the front panel unit 60 may also connect directly to the end panel units 40 or the floor units 30 at one or more locations (Fig. 13).

Once the frame structure is in place, the non-structural wall panel units 70, 80, 90, 100 are mounted between the upper beam 43 and lower beam 41 of the end panel units 40, with spaces provided for window joinery as required. Similarly, wall panels 70, 80, 90, 100 forming the back wall of the structure can be added at this point and mounted adjacent the elongate piles 21, end panels 40, floor units 30 and/or cross beam 25.

Once the modular structure has been erected, roofing can be completed followed by the installation of window joinery.

It is anticipated that the process for construction of the building frame using pre-cast units will be completed in 1-2 days for a small to medium sized structure, with structures having multiple storeys taking a few days longer.

It should be noted that the construction steps described above describe only one way of erecting the building frame of this invention. The general concepts may be applied to a wide range of different building designs having multiple levels, styles and configurations and should not be seen as limiting in either their method or order.

It should also be recognised that the dimensions, shapes and sizes of the modular components exemplified are not intended to be limiting, but provide examples of preferred sizes for the examples given. While it is preferable for the building frame to have a solid, robust appearance, the final sizes and shapes of the components may be determined by a skilled builder or

architect and may take any form required that meets the structural needs and design aesthetics of a particular building frame design.

The modular building system of the present invention has a number of advantages over the prior art.

The system is very adaptable to various sites, it is flexible so that the home owner still has scope to choose a configuration that suits their particular site and preferred layout and function. The building owner can easily change the final appearance to personalise the dwelling to suit their taste without any significant engineering input. The robustness of the preferred embodiment allows for over engineering to allow a high degree of flexibility for the home owner.

The use of high density building materials such as concrete results in a building that is highly sustainable with a significantly longer life span and lower maintenance than buildings constructed from timber or other light weight material.

The manufacture of the individual components of the frame is fast and limits the use of chemicals commonly applied to treated wood products or weatherboard, and can be made to order, limiting wastage during the manufacturing process.

The system easily reverts to conventional methods of construction. For example a client may choose to use part of the claimed system but then incorporate building methods from elsewhere for particular features. Figure 27 best describes the system in its simplest form and demonstrates how the system can be used as an affordable building solution. Placing pre-finished concrete floor units with a crawl space below, stacked with prefabricated wall, roof sections and flat packed building elements is a clear advantage over current systems but added to this the same pre-finished floor units can be readily used for a more durable, robust, high density walls on flat or sloping sites as described in the above paragraphs.

The strength and robustness of the perimeter beams allow for casting in of all inserts for bolt on purlin cleats, which provides very fast methods of construction.

Specific beneficial features of the system include:

Drainage channels and any connections, penetration or joins in the drainage channel are all generally located outside the living space;

Walls become cladding panels hung from the concrete structural skeleton which is an extremely durable, readily available building material which is essentially unaffected by moisture.

The design allows for significant portions of the build to be completed by a building owner without constant supervision, reducing build costs.

The building system caters to all the important aspects of a building and is designed with the home owner in mind. A significant feature to achieving housing affordability is to maximise the work that a homeowner can do themselves. The future accessibility of all areas afforded by the structure of the floor units allow for the home owner to self-manage the build and self-install services. The units could utilise a 24v system which the home owner could install themselves equally plumbing could be push-fit type fittings allowing the homeowner to self-install. Because all areas of the frame are fully accessible there is no reason why these trades cannot be completed by the home owner and then inspected by the local authority for compliance before being put into use. The homeowner could opt for more conventional power and plumbing and because the building can be retrofitted the home owner could make considerable saving by managing these trades and all finishing trades directly.

The above principles could also be applied to the joinery installation. The weatherproofing system incorporated into the building frame is extremely robust. Leaks would not cause any structural damage and would be easy to detect and simple to repair, as all components can be readily inspected and replaced.

The design allows clients to start off small and affordable and add further modules when more funds allow.

The modular buildings have high thermal mass, which is a base requirement to create temperature stable homes.

The system lends itself to sloping sites and difficult sites. These types of sites are usually avoided by housing companies, so further options are provided for faster, more economical building on a wider range of terrain.

The modular design reduces the skill level required to construct a building, making the process accessible to a wider range of people.

It is a modular precast concrete building system which allows concrete buildings to be built on difficult sites very quickly. It is expected that a two-story modular building could be erected using precast units within seven days.

Bolt together floor units create a useful mass anchor for propping and bracing items to.

The design minimises the number of joints and the number of components, improving durability and weather-tightness.

The concrete guttering systems of the present invention allow for the use of simple modular flashings that can easily be replaced without moving key building elements. This is in significant contrast to conventional fascias and guttering systems that are labour intensive, time consuming and require significant maintenance.

The system is particularly suited to mass production, providing the opportunity to reduce costs even further. The design minimises the number of trades and number of site hours required. This reduces project risk and should also reduce the number of accidents, costs and ultimately the impact on the environment.

The entire disclosures of all applications, patents and publications cited above and below, if any, are herein incorporated by reference.

Reference to any prior art in this specification is not, and should not be taken as, an acknowledgement or any form of suggestion that that prior art forms part of the common general knowledge in the field of endeavour in any country in the world.

Where in the foregoing description reference has been made to integers or components having known equivalents thereof, those integers are herein incorporated as if individually set forth.

It should be noted that various changes and modifications to the presently preferred embodiments described herein will be apparent to those skilled in the art. Such changes and modifications may be made without departing from the spirit and scope of the invention and without diminishing its attendant advantages. It is therefore intended that such changes and modifications be included within the present invention.

Claims

1. A modular building system for constructing a building frame, the system comprising plurality of structural units including;

- one or more base units;
- one or more floor units, the floor units connected directly or indirectly to the base units;
- a plurality of end panel units, the end panel units connected directly or indirectly to the base units and/or floor units;
- at least one front beam unit, the front beam unit adapted to connect to at least two end panel units; and
- one or more front panel units, the front panel unit adapted to connect to at least two end panel units and/or at least one floor unit;

wherein all units of the building system are formed from high-density materials.

2. The modular building system of claim 1, further including two or more elongate piles, the elongate piles directly or indirectly connectable to, or integrally formed with one or more base units to form one or more pile units.

3. The modular building system of any one of claims 1 or 2, wherein the base unit includes an elongate beam formed from high density material, the beam having at least one substantially planar surface.

4. The modular building system of claim 2, wherein the pile unit includes one base unit having an upper surface, the base unit mounted orthogonally to and spanning a space between each of the two elongate piles, the upper surface of the base unit oriented such that in use, the upper surface of the base unit provides a substantially horizontal mounting surface and the two elongate piles are vertically connectable to the ground.

5. The modular building system of claim 4, wherein the base unit spans the two elongate piles at a first end of the piles, such that in use, the piles extend only from the lower face of the base unit and are vertically mountable in the ground.

6. The modular building system of claim 4, wherein the base unit spans the two elongate piles at a point along the length of the piles, such that the piles extend through or from both the upper and lower faces of the base unit.

7. The modular building system of claim 6, wherein the piles extend from the upper face of the base unit to form a wall support structure.

8. The modular building system of any one of claims 4 to 7, wherein the base unit and/or upper surface of the base unit includes integrally formed connection means including one or more recesses, apertures, grooves, channels, flanges or ridges.

9. The modular building system of any one of claims 4 to 8, wherein base unit spanning the spaced apart elongate piles is sized to overhang the elongate piles in at least one direction.

10. The modular building system of any one of claims 1-9, wherein the floor units include a substantially planar surface having an upper face and a lower face, and at least two side edges, the two side edges extending at substantially right angles from opposing ends of the lower face of the planar surface of the floor unit.

11. The modular building system of claim 10, wherein the floor unit has an “n” or “m” shaped cross section.

12. The modular building system of claim 10 or 11, wherein the floor unit includes one or more ribs, the ribs extending from the lower face of the planar surface.

13. The modular building system of claim 12, wherein the one or more ribs are parallel to the side edges and extend the partial or full length of the planar surface.

14. The modular building system of any one of claims 10 – 13, wherein the floor units have a substantially rectangular planar surface.

15. The modular building system of any one of claims 10-14, wherein the floor units include one or more adjustable support members mounted on the base of one or more of the side edges extending at right angles from the lower face of the planar surface.

16. The modular building system of claim 1, wherein the end panel unit is adapted to connect to one of more floor units and/or base units and is shaped to define at least three sides of a wall structure.

17. The modular building system of claim 16, wherein the end panel unit includes a lower beam adapted to connect to one or more floor units, pile units and/or structural base units, a side beam directly or indirectly connected to and extending from a first end of the lower beam at between 60° - 120°, and one or more upper beams directly or indirectly connected to and extending from an opposite end of the side beam at between 60° - 120°.

18. The modular building system of claim 17, wherein the side beam extends at a substantially 90° angle from the lower beam.

19. The modular building system of any one of claims 16 to 18, wherein the end panel unit is substantially “C” shaped.

20. The modular building system of any one of claims 16 - 19, wherein the end panel unit is formed as a single piece construction.

21. The modular building system of any one of claims 16 – 20, wherein one or more sides of the end panel unit includes one or more rebates, recesses, channels, apertures or flanges.

22. The modular building system of any one of claims 16 – 21, wherein the end panel unit includes a guttering means in the form of an integrally formed channel extending the length or partial length of an exterior face of the end panel unit.

23. The modular building system of claim 22, wherein the integrally formed channel extends the length or partial length of an exterior face of the upper beam.

24. The modular building system of claim 23, wherein the channel is located such that when the front beam is mounted within a building, the channel opening faces upwards.

25. The modular building system of any one of claims 22 - 24, wherein the channel includes at least one open end to facilitate fluid connection to an adjoining channel on a different unit.

26. The modular building system of any one of claims 16 – 25, wherein the end panel unit includes a bracing means.

27. The modular building system of claim 26, wherein the end panel unit is “C” shaped and the bracing unit extends between an upper beam to a lower beam of the end panel unit.

28. The modular building system of any one of claims 1 to 27, wherein the front beam unit includes one or more rebates, recesses, channels, apertures or flanges and adapted such that in use, the front beam unit is connectable at each end to an end panel unit.

29. The modular building system of claim 28, wherein the front beam unit includes a guttering means in the form of an integrally formed channel, the channel extending the length of an exterior face of the front beam unit.

30. The modular building system of claim 29, wherein the channel includes at least one open end to facilitate fluid connection to an adjoining channel on a different structural unit.

31. The modular building system of any one of claims 1 to 30, wherein the front panel unit includes a substantially rectangular planar first surface forming an exterior face of the front panel unit, the planar surface defined by two side walls, an upper wall and a lower wall, wherein the front panel unit is adapted to connect directly or indirectly to one or more floor units and/or one or more end panel units.

32. The modular building system of claim 31, the front panel unit includes one or more rebates, recesses, channels, apertures or flanges.

33. The modular building system of any one of claims 1 – 32, wherein the system further includes one or more pre-cast wall panel units adapted for connection to one or more of the structural units of the building system, the wall panel units formed from a high density material and a low density material.

34. The modular building system of claim 33, wherein the wall panel units include a first inner layer formed of high density material and an outer layer formed of a low density material.

35. The modular building system of claim 33, wherein the wall panel units include a first inner layer formed of low density material and an outer layer formed of a high density material.

36. The modular building system of claim 33, wherein the wall panel units include a first inner layer formed of low density material sandwiched between two outer layers formed of a high density material.

37. The modular building system of claim 36, wherein the low density inner material is sandwiched between a high density inner layer having a greater thickness than the high density outer layer.

38. The modular building system of any one of claims 33-37, wherein the high density material is concrete and the low density material is polystyrene.

39. The modular building system of 33 - 38, wherein the wall units are connectable to a floor unit by a hinge mechanism, such that, in use, the wall panel unit is moveable from a first horizontal position on top of the floor unit, to a second vertical position substantially perpendicular to the floor unit.

40. The modular building system of any one of claims 1 – 39, wherein the high density material is concrete.

41. A building frame, the building module formed from the modular building system as claimed in any one of claims 1 - 40.

42. The modular building system of any one of claims 1 – 40, wherein the system further includes a balcony unit, the balcony unit adapted to connect to one or more floor units, end panel units and/or front beam units.

43. The modular building system of any one of claims 1-40, wherein the building system includes a plurality of roof panel units, the roof panel units are adapted to be connected to an adjacent roof panel unit and/or end panel unit and/or front beam unit of the building frame.

44. A connection system for use with the modular building system of any one of claims 1-40, the connection system including a nut, bolt and at least one spacer adapted to centrally receive the bolt, the connection system adapted to fit a pre-formed aperture in a building unit.

45. The connection system of claim 44, wherein the entry point of the pre-formed aperture and the spacer are frustoconical in shape such that in use, the spacer locates into the pre-formed

aperture, and the bolt is received through the centre of the spacer, into the pre-formed aperture.

46. An edge protection system for use with the modular building system of any one of claims 1-40, wherein the edge protection system includes a rail support member adapted for attachment to an end panel unit or front beam unit; and a guard rail, the guard rail adapted for attachment to the rail support member.

47. The edge protection system of claim 46, wherein the rail support member includes an upright post and a down post, the upright post and down post connected offset and parallel to each other by a cross bar.

48. The edge protection system of claim 47, wherein the cross bar is at right angles to the upright post and down post.

49. The modular building system of claims 10-15, wherein the floor units are adapted to connect to a storage bladder, the storage bladder located in a space defined by one or more ribs of the floor unit.

50. A modular building system for constructing a building frame, the system comprising plurality of structural units including;

- one or more floor units;
- a plurality of end panel units, the end panel units connected directly or indirectly to the floor units;
- at least one front beam unit, the front beam unit adapted to connect to at least two end panel units; and
- one or more front panel units, the front panel unit adapted to connect to at least two end panel units and/or at least one floor unit;

wherein all units of the building system are formed from high-density materials.

51. A method for constructing a modular building frame using the modular building system of any one of claims 1-40, the method including the steps of;

- installing one or more base units on a ground surface;
- connecting one or more floor units to the base units;
- connecting a plurality of end panel units directly or indirectly to the base units and/or floor units;
- connecting a front beam unit between at least two end panel units; and
- connecting a front panel unit to at least two end panel units and/or at least one floor unit.

52. A method for constructing a high material density modular building frame on sloped or uneven terrain using the modular building system of claim 2, wherein the method including the steps of;

- installing a one or more pile units on a ground surface, the pile unit including a base unit supported by two or more elongate piles;
- connecting a plurality of floor units to the base unit;
- connecting a plurality of end panel units directly or indirectly to the base units and/or floor units;
- connecting a front beam unit between at least two end panel units; and
- connecting a front panel unit to at least two end panel units and/or at least one floor unit.

53. The method of claim 52, wherein the pile unit includes a base unit spanning the two elongate piles at a point along the length of the piles, such that the piles extend through or from upper and lower faces of the base unit and the method of installing includes vertically inserting the piles extending from the lower face of the base unit into the ground.

54. The method of claim 53, wherein the method further includes the step of connecting a structural cross beam between the piles extending from the upper face of the base unit.

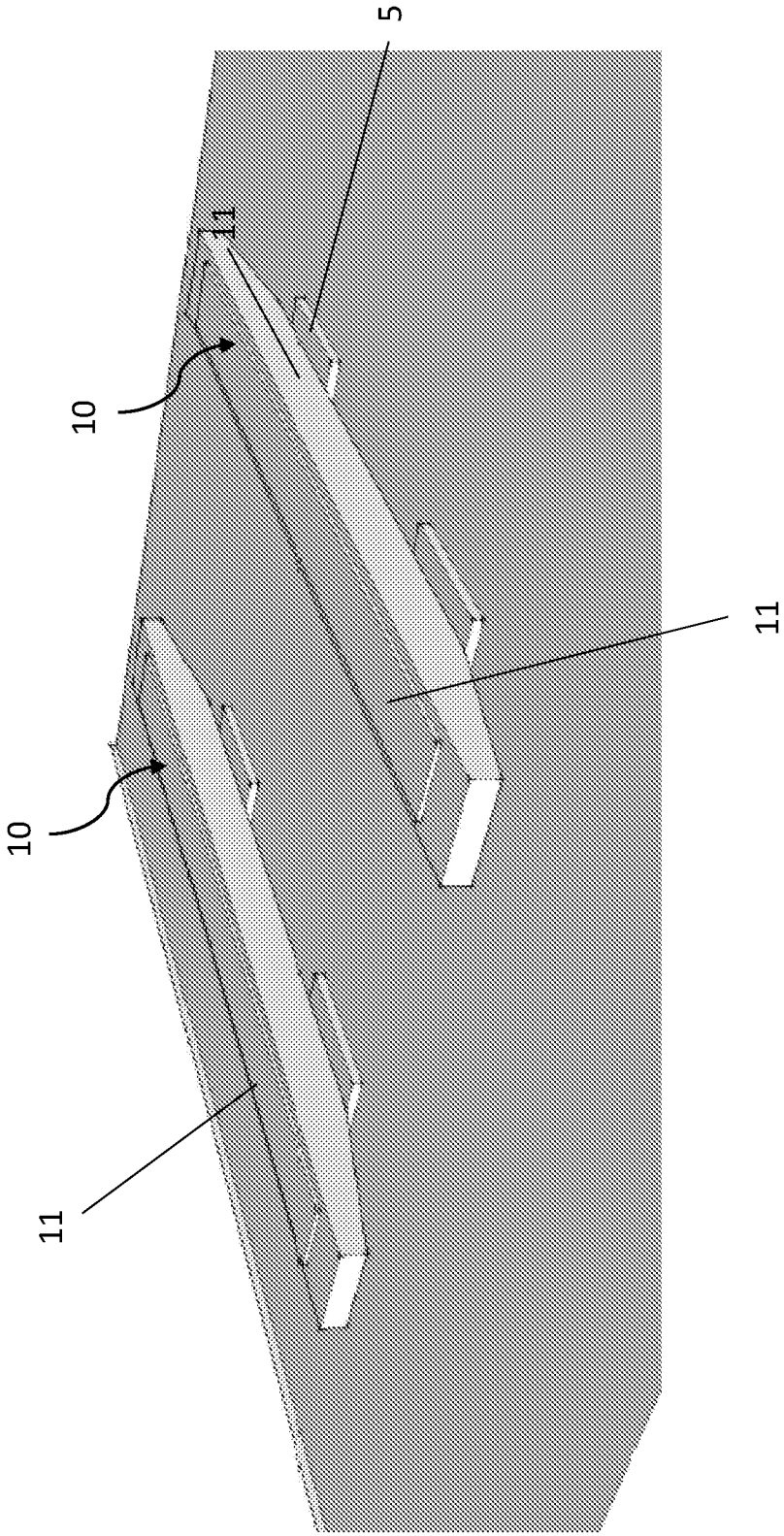

Figure 1

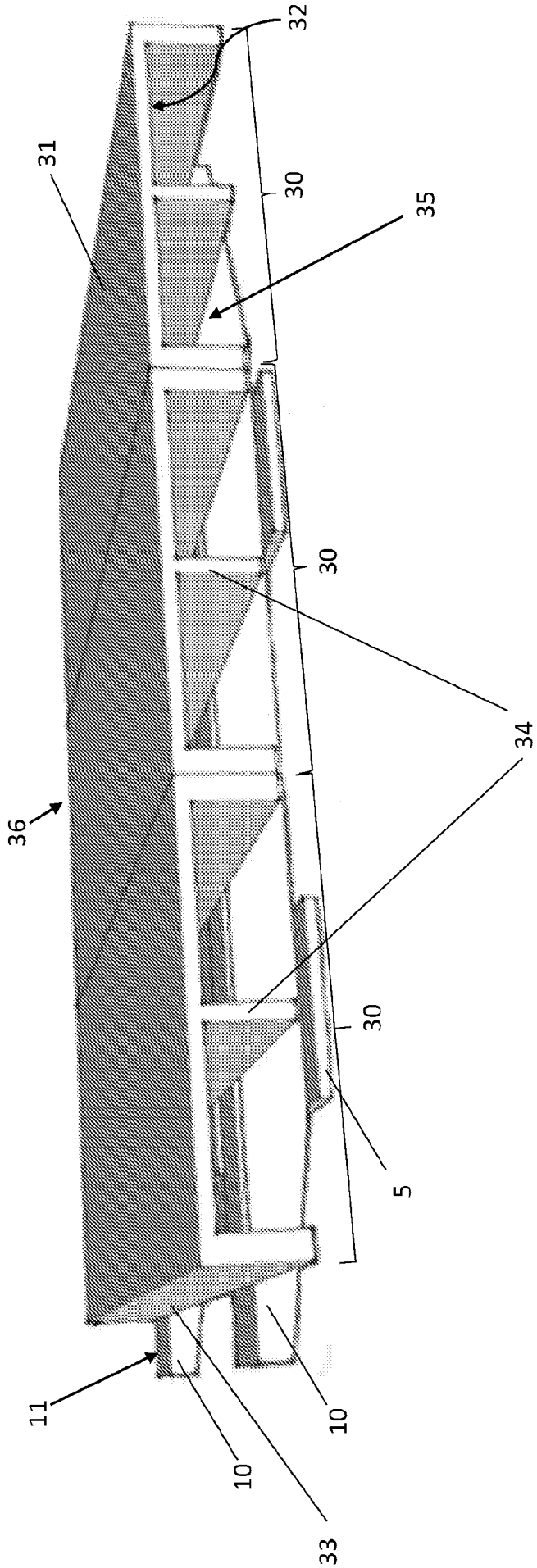

Figure 2

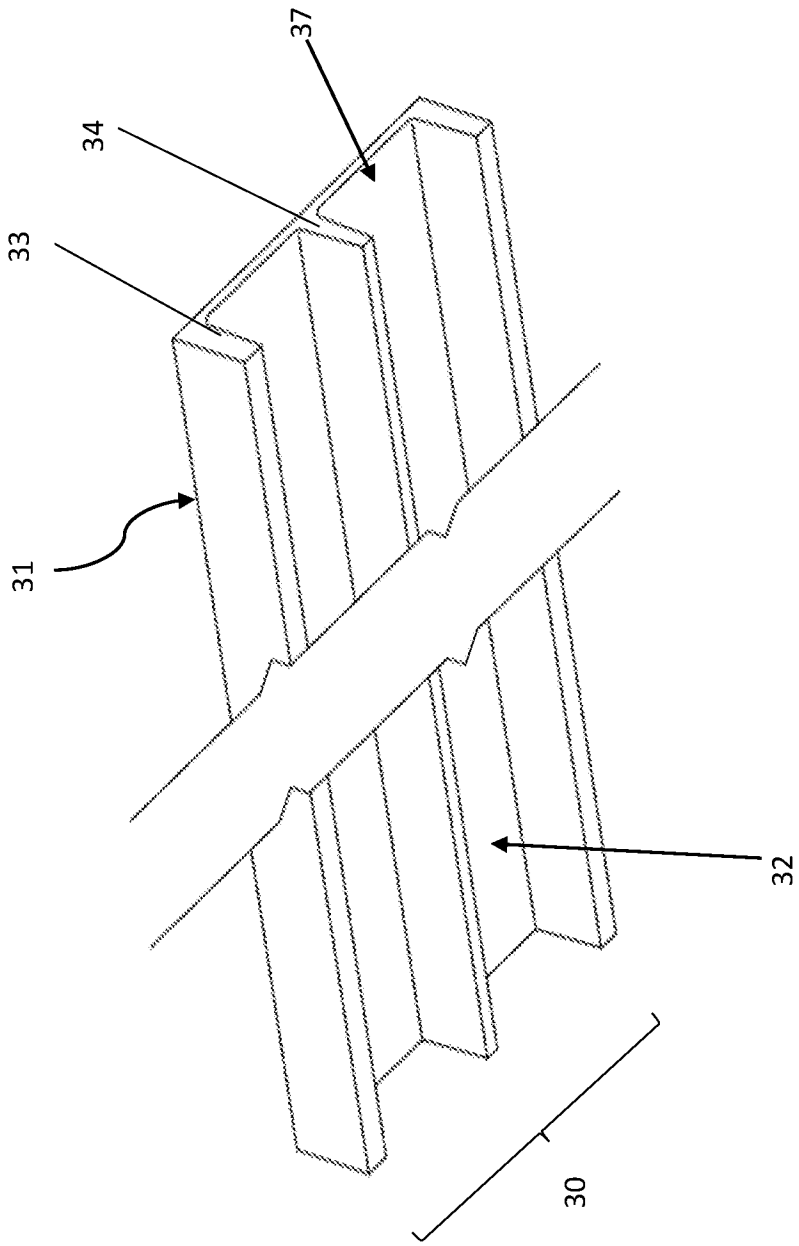

Figure 2A

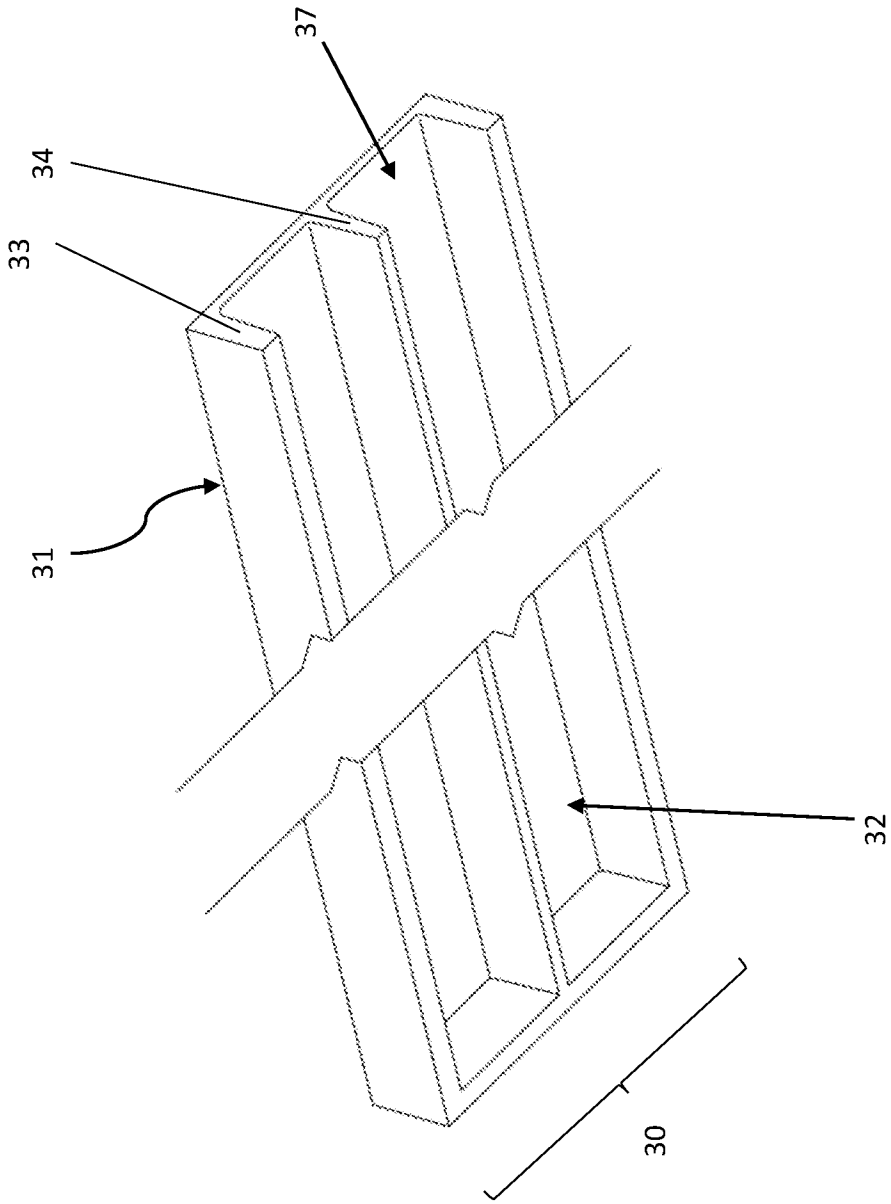

Figure 2B

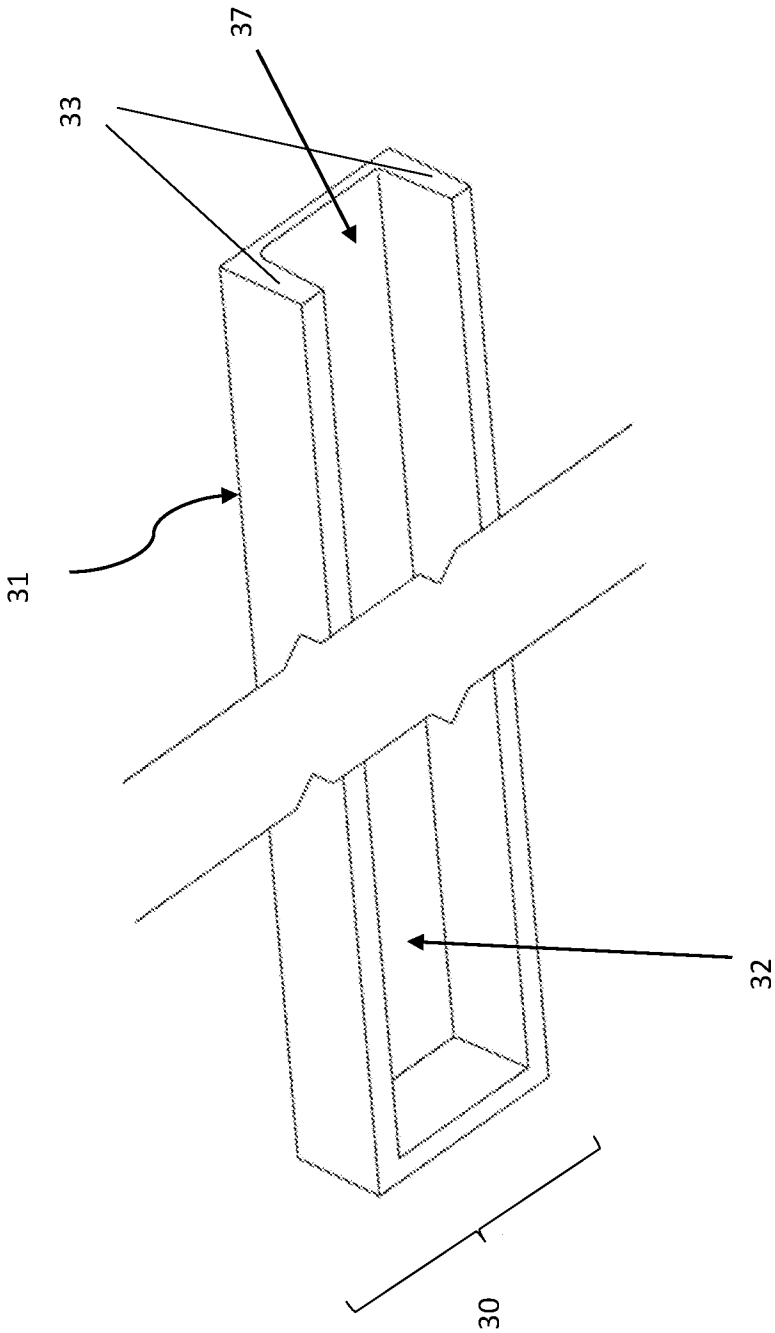

Figure 2C

Figure 2D

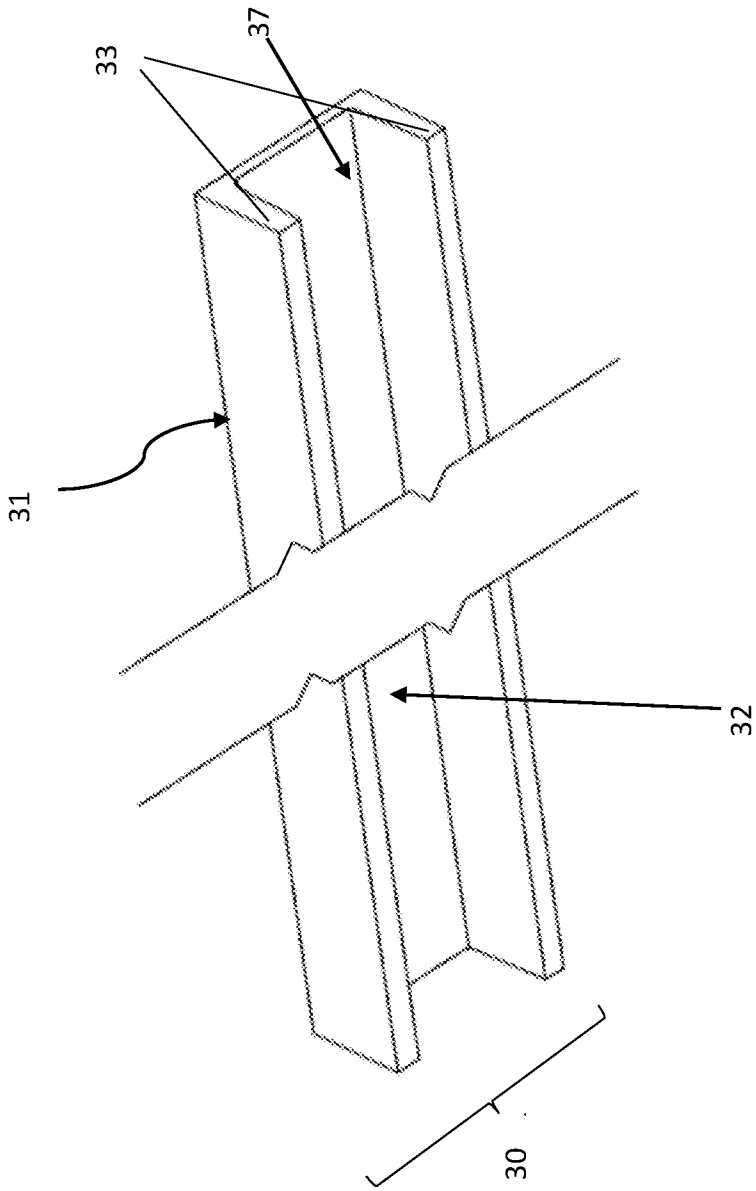

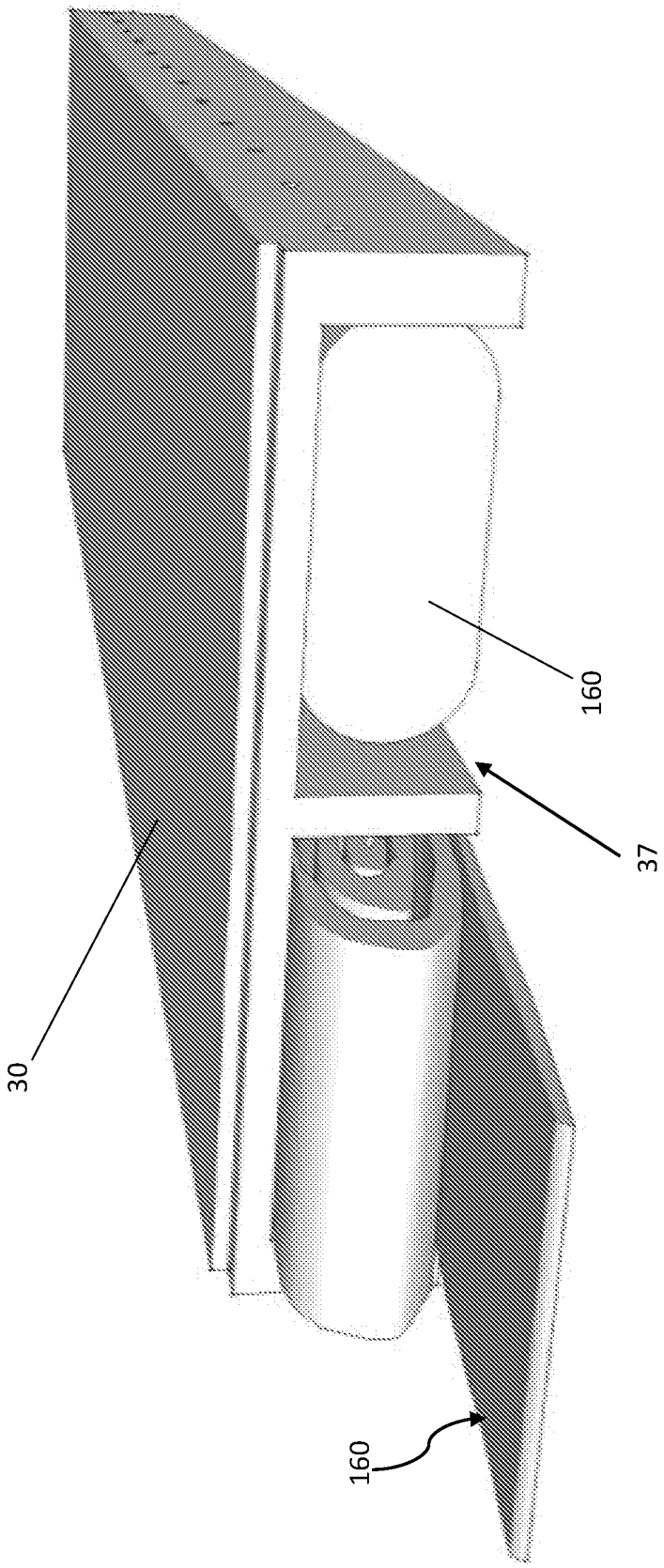

Figure 2E

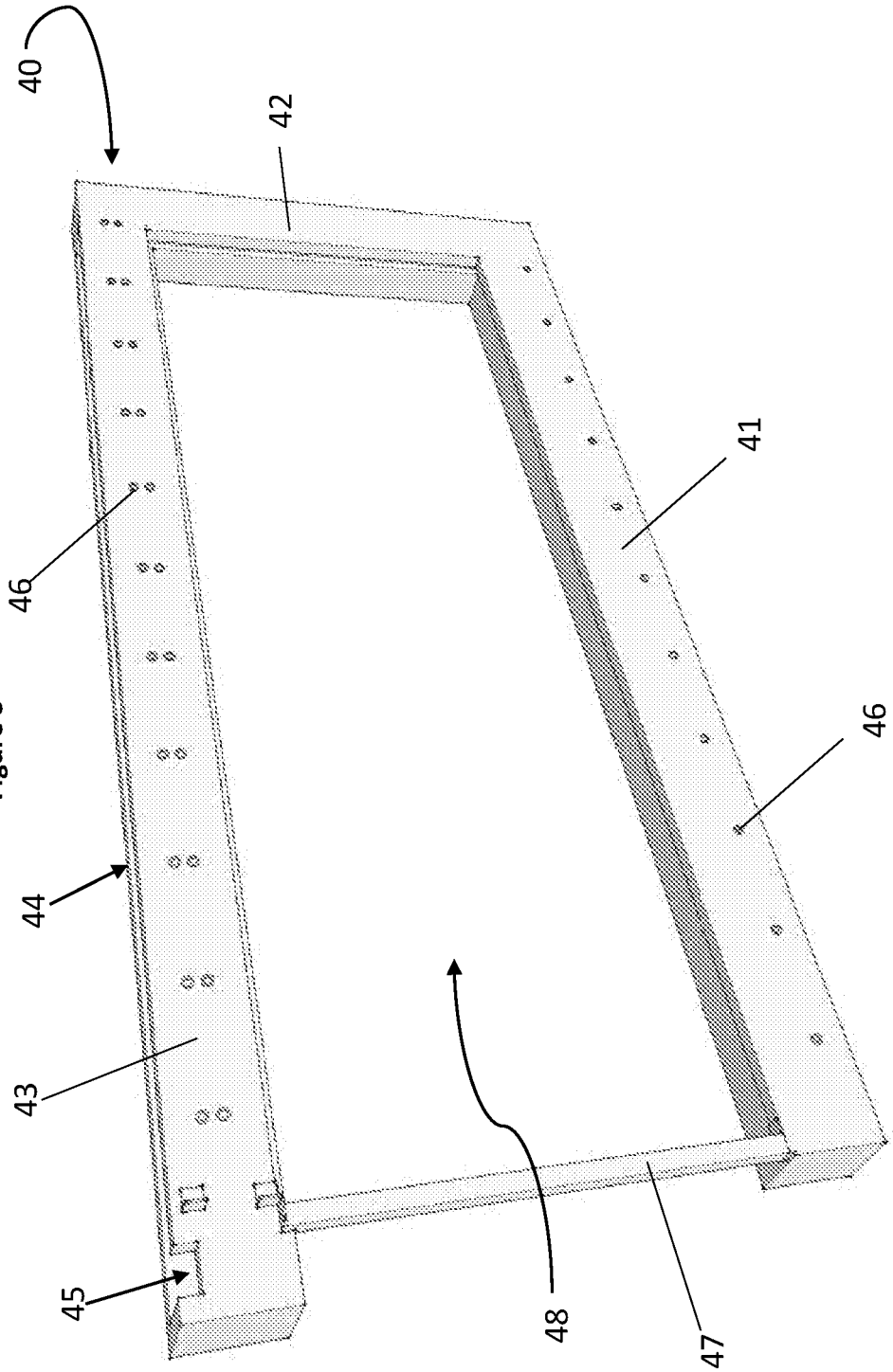

Figure 3

Figure 3A

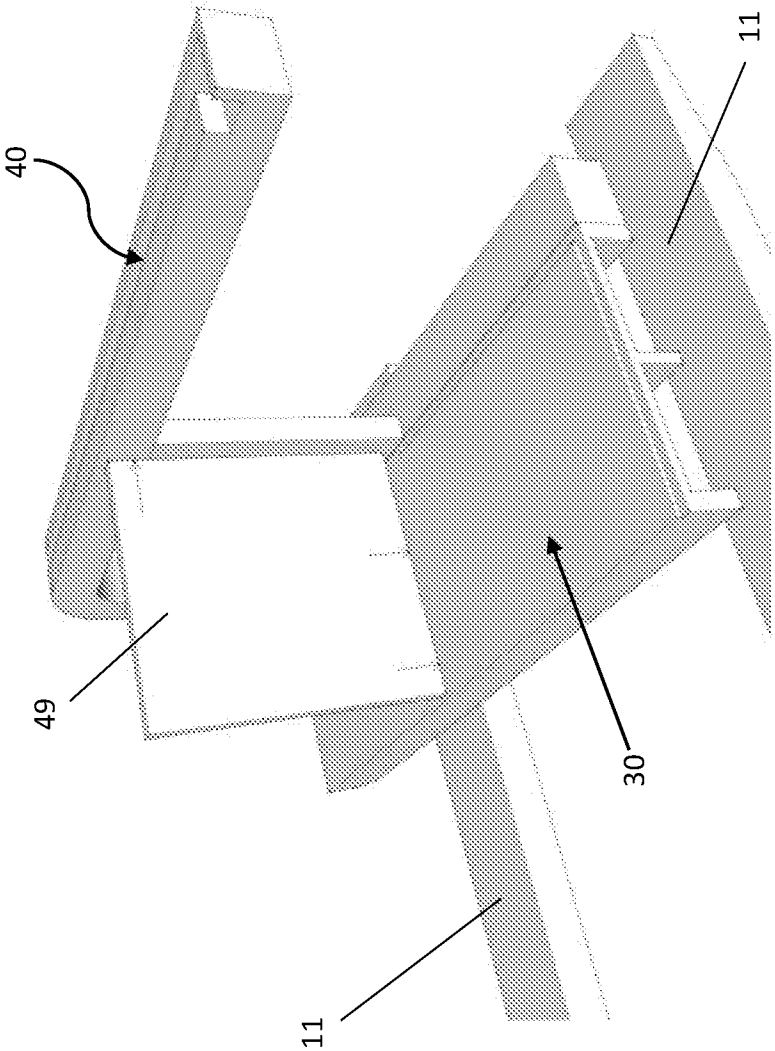

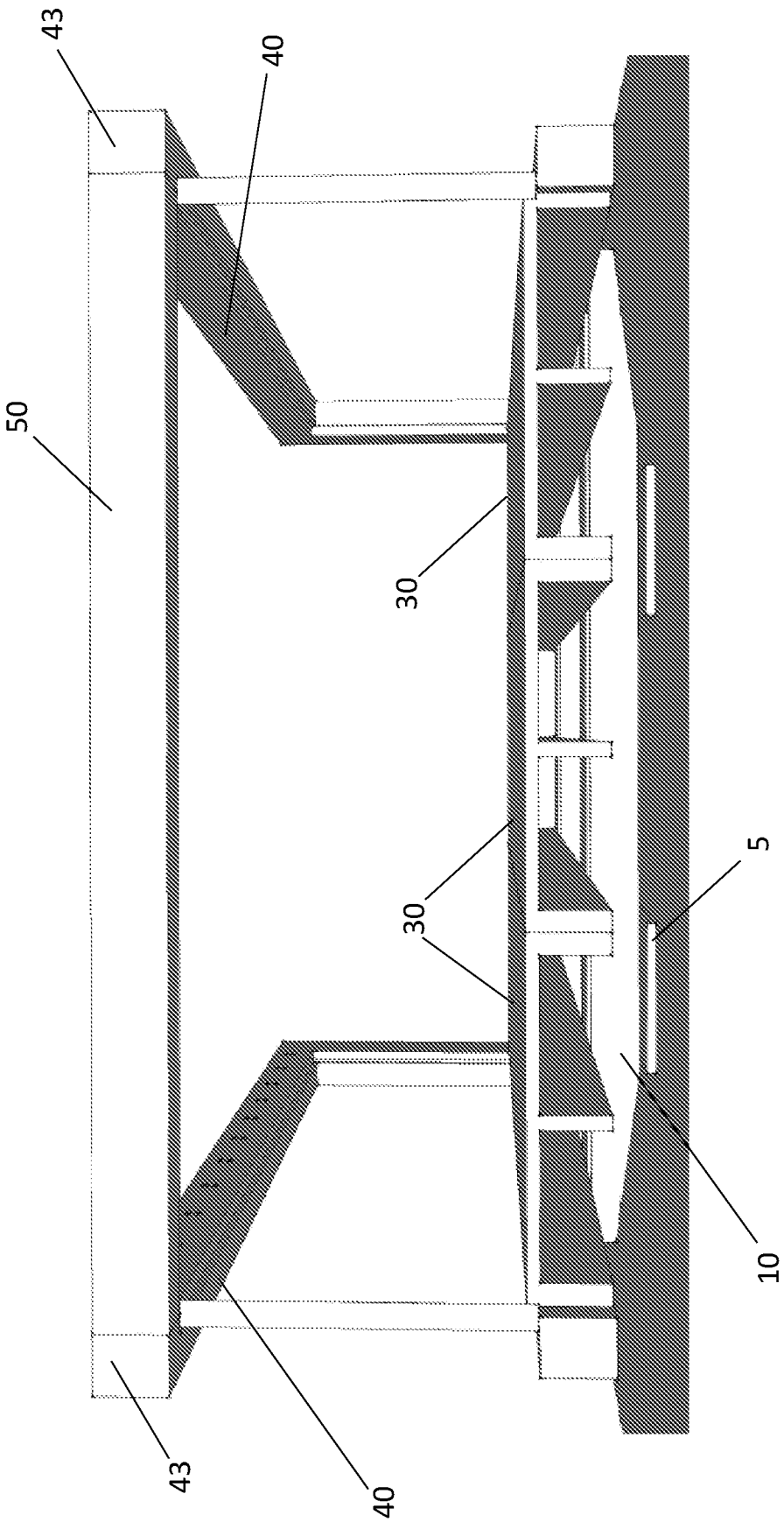

Figure 4

Figure 5

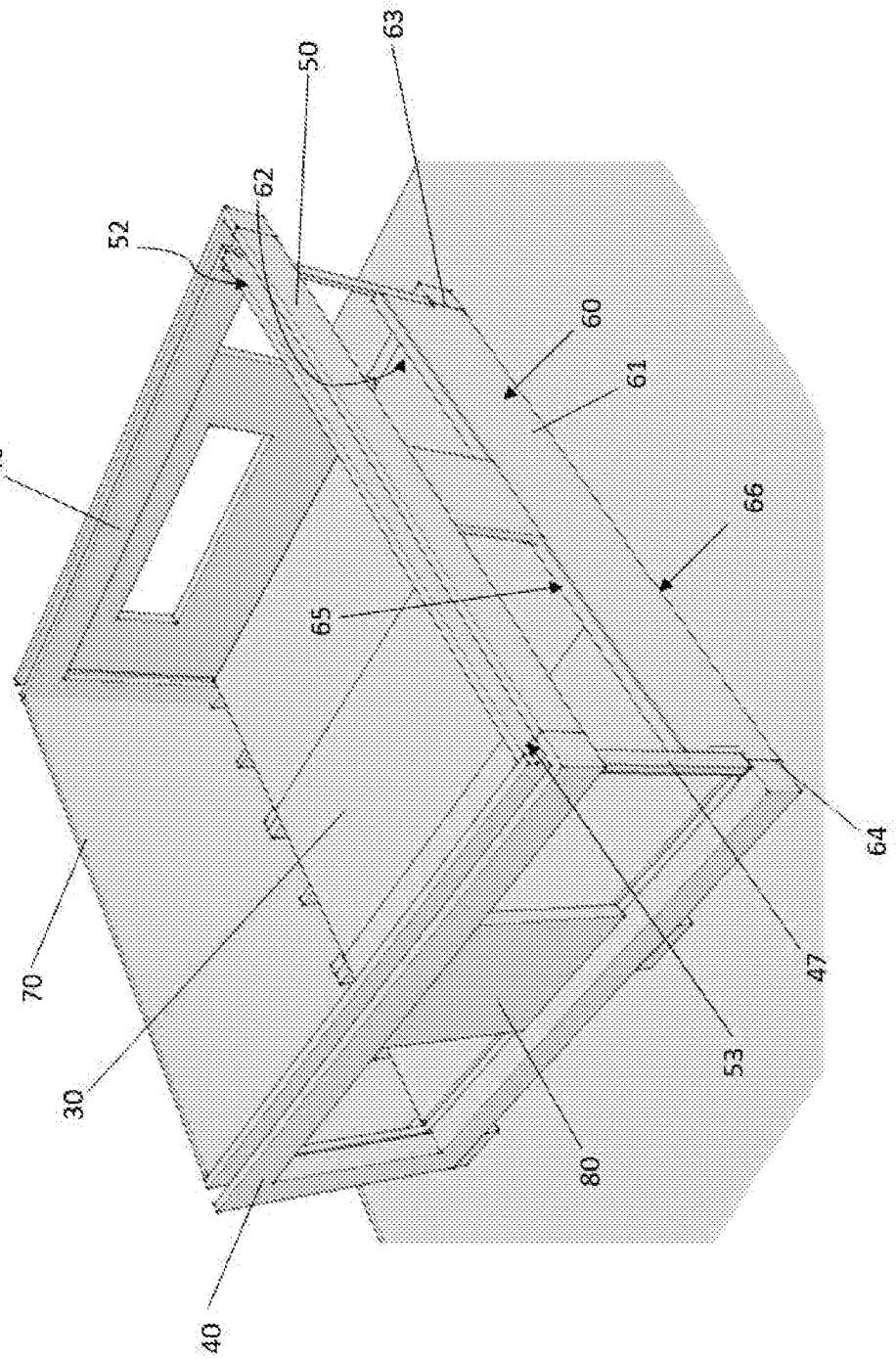

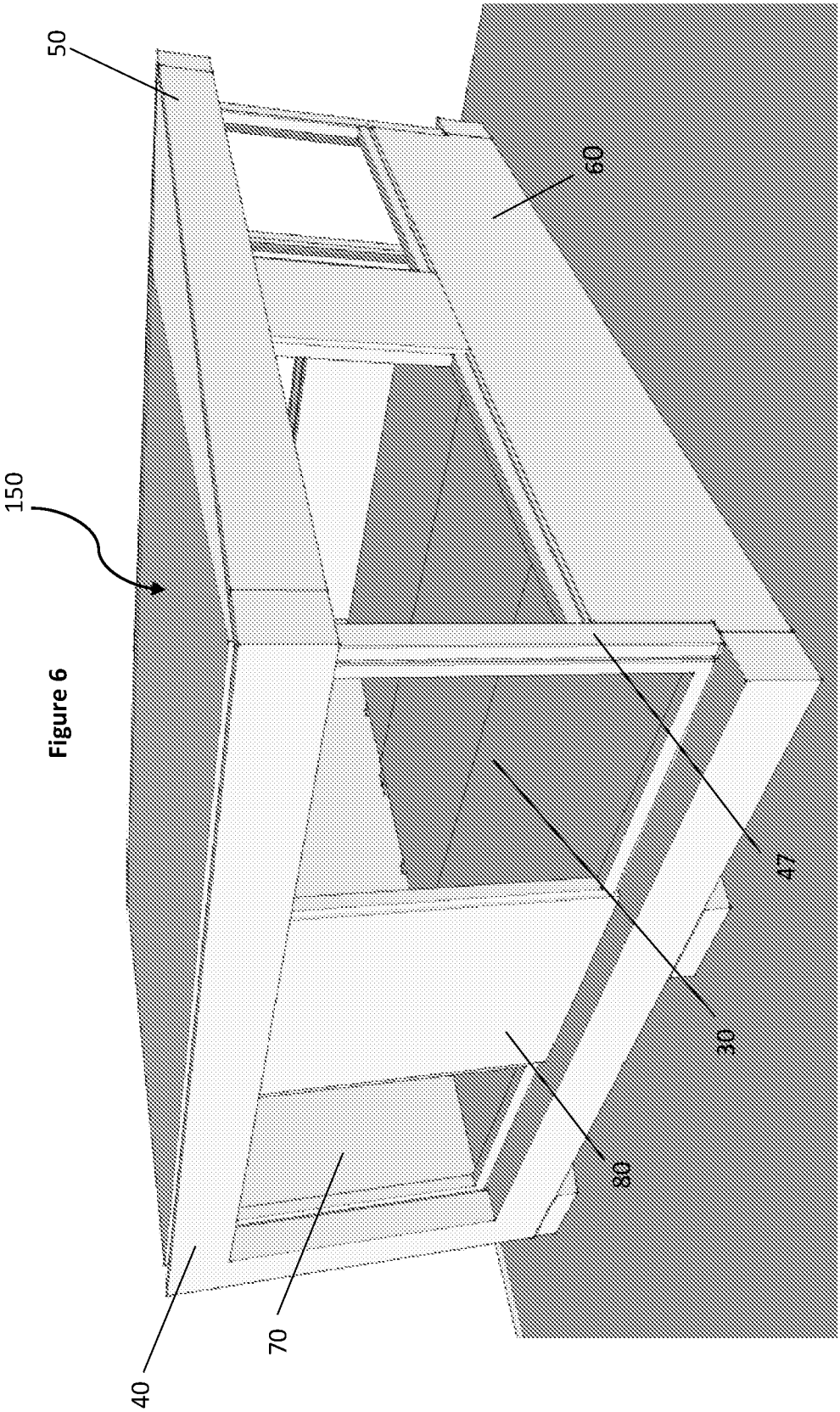

Figure 6

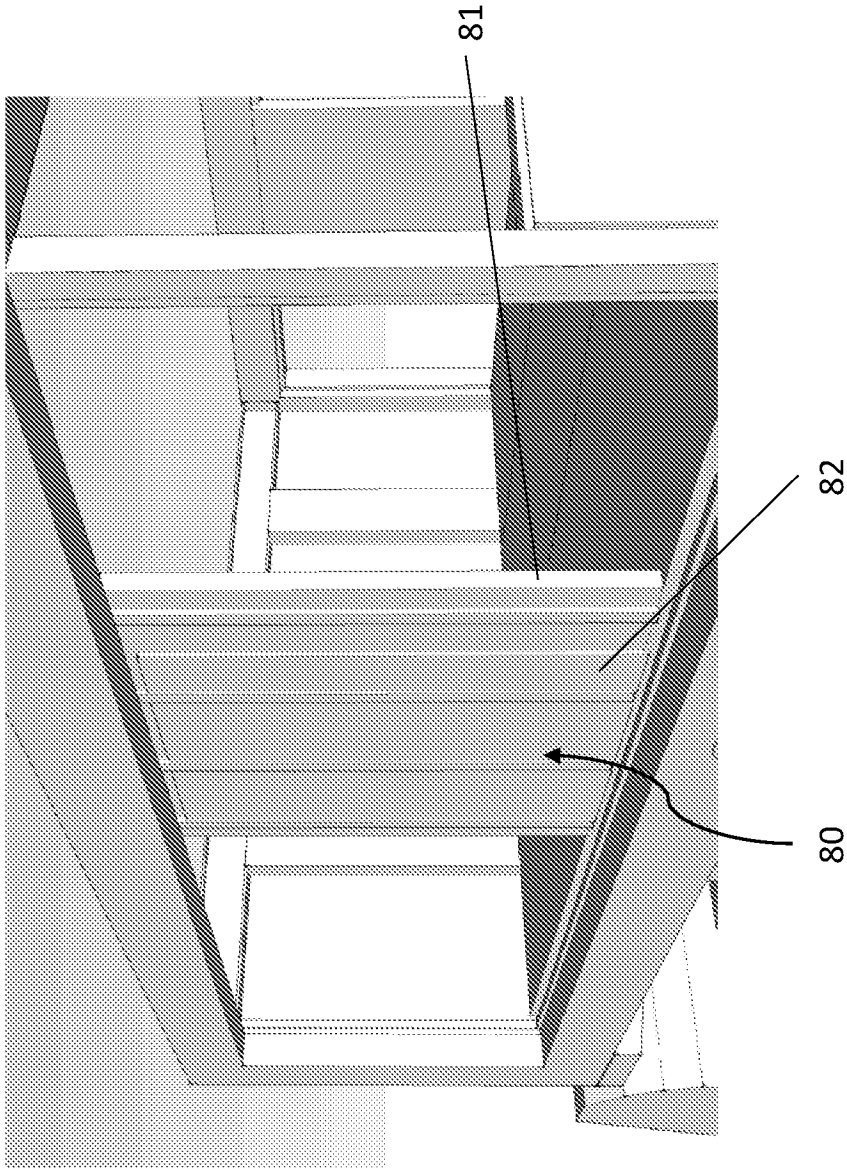

Figure 7

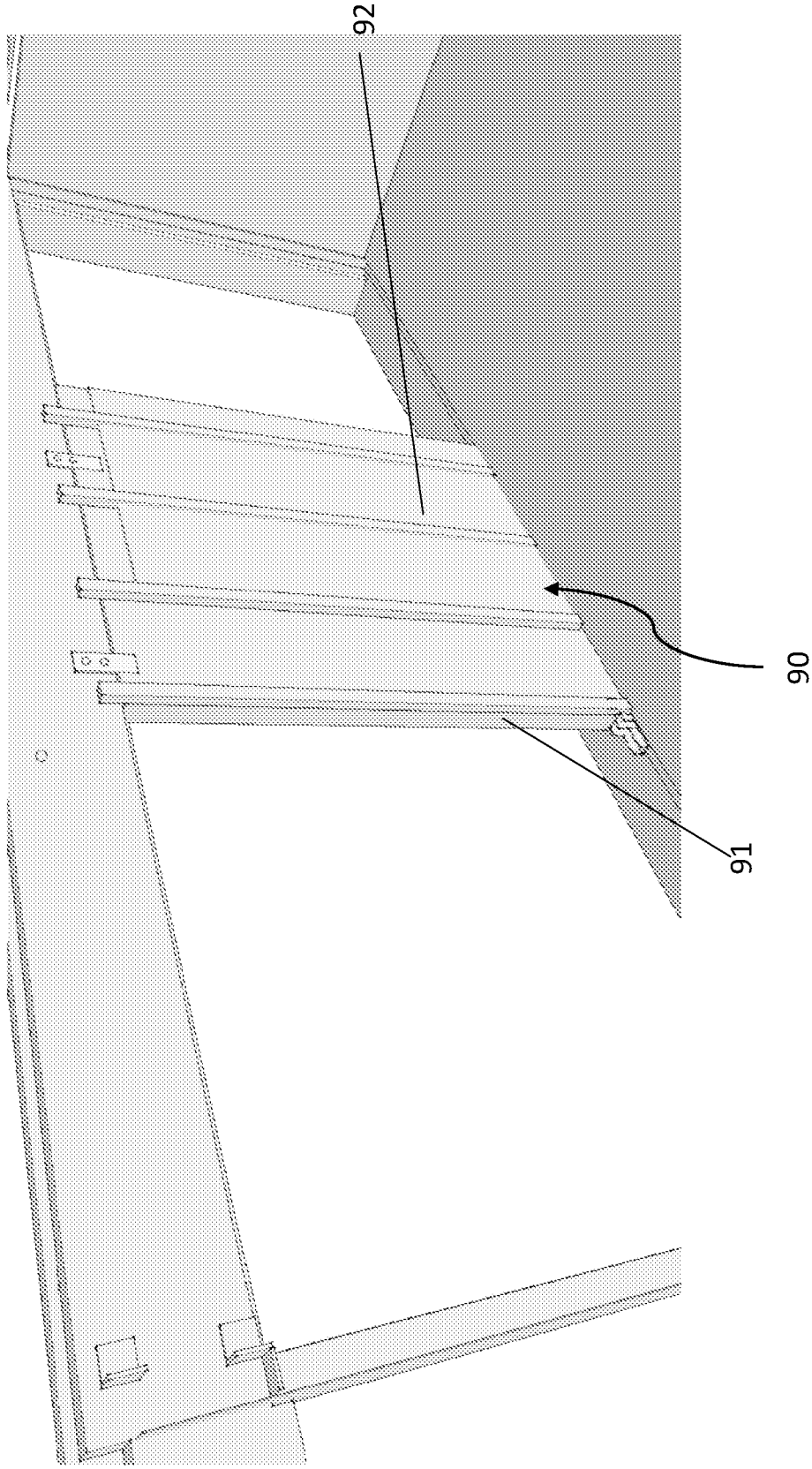

Figure 8

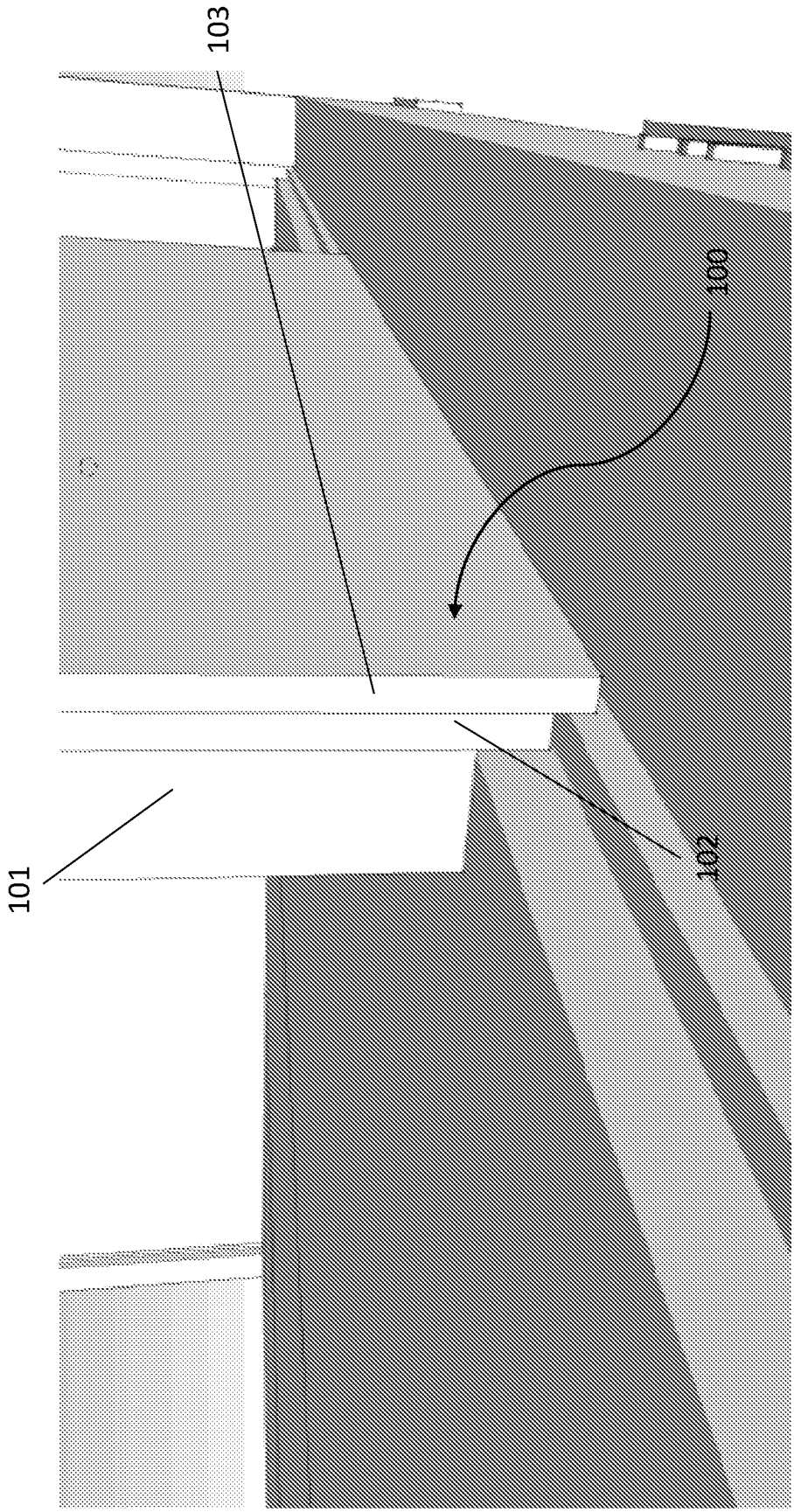

Figure 9

Figure 10

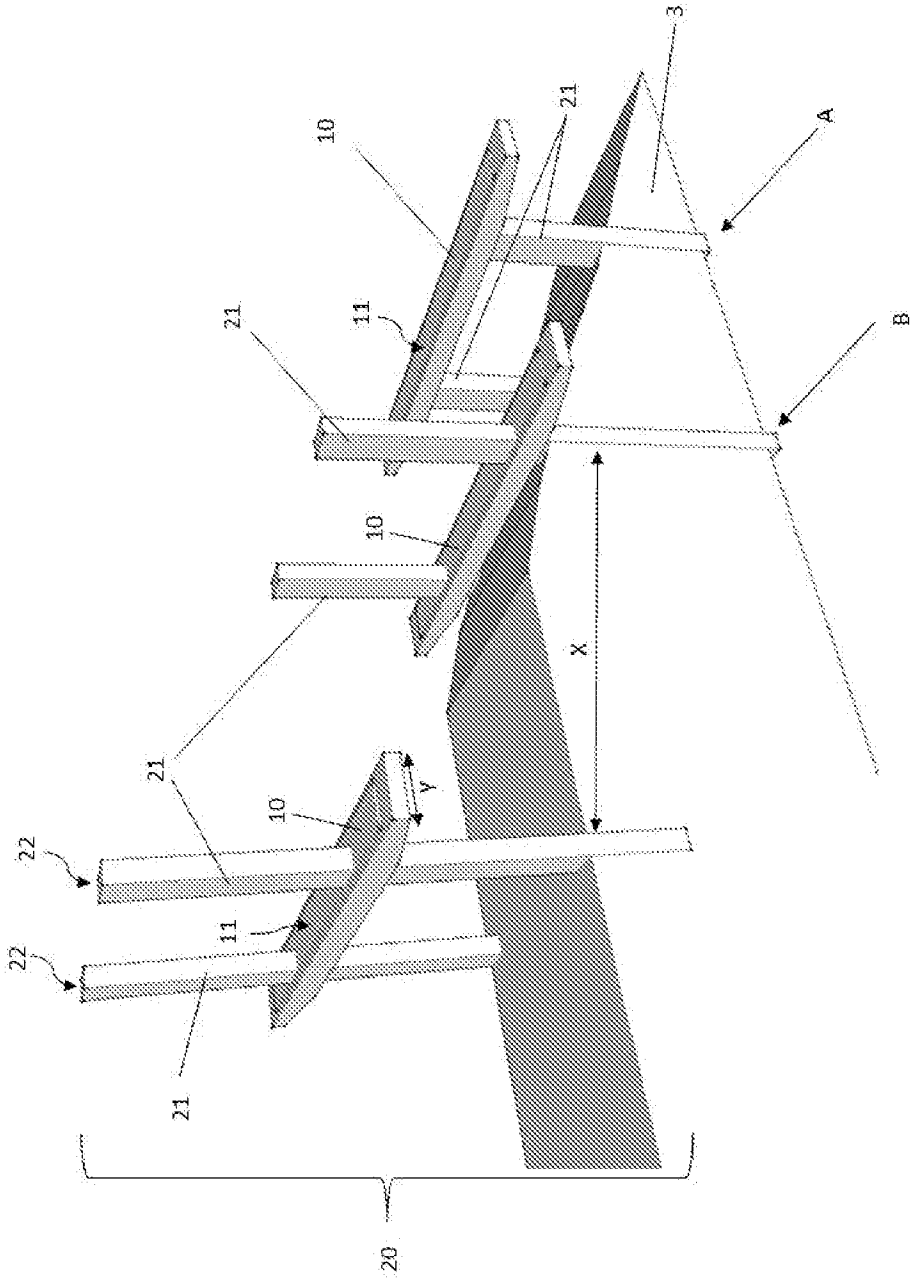

Figure 11

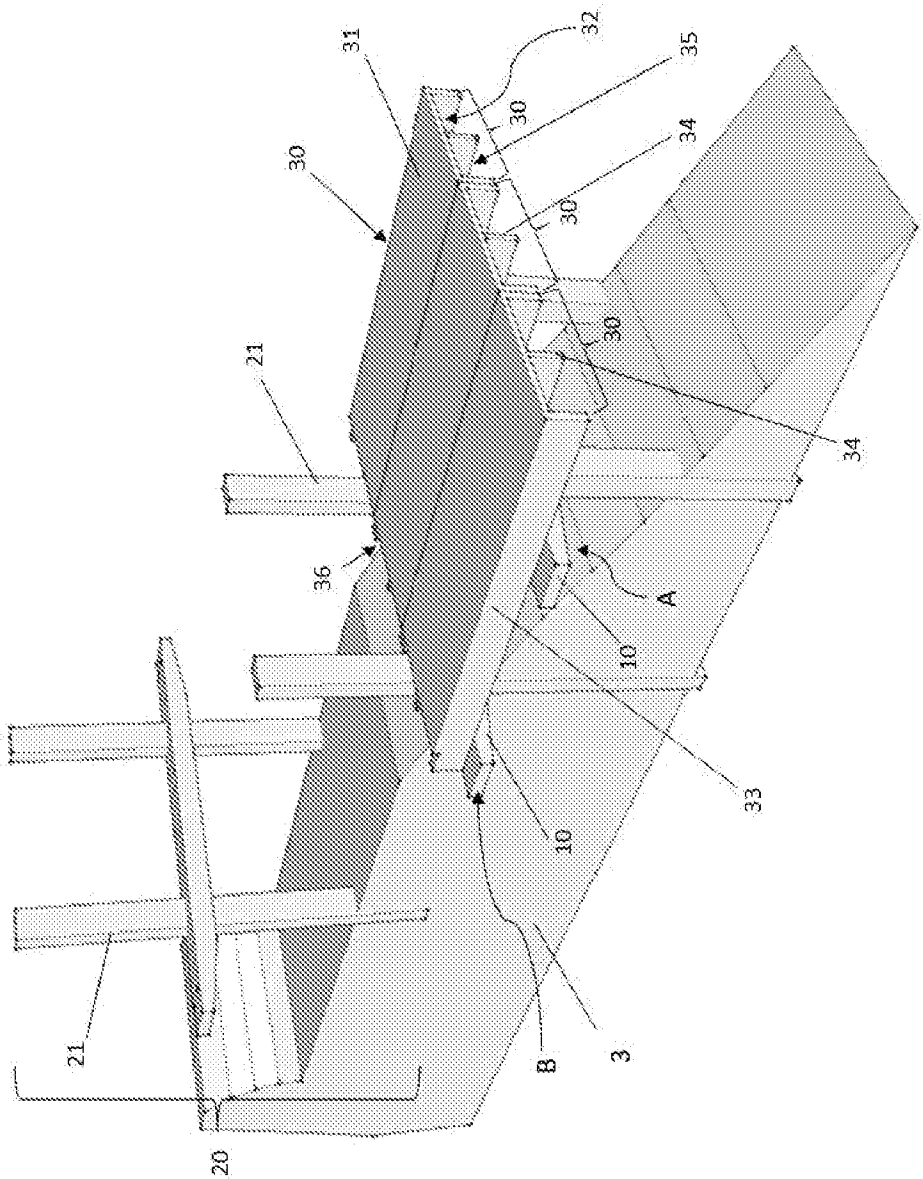

Figure 12

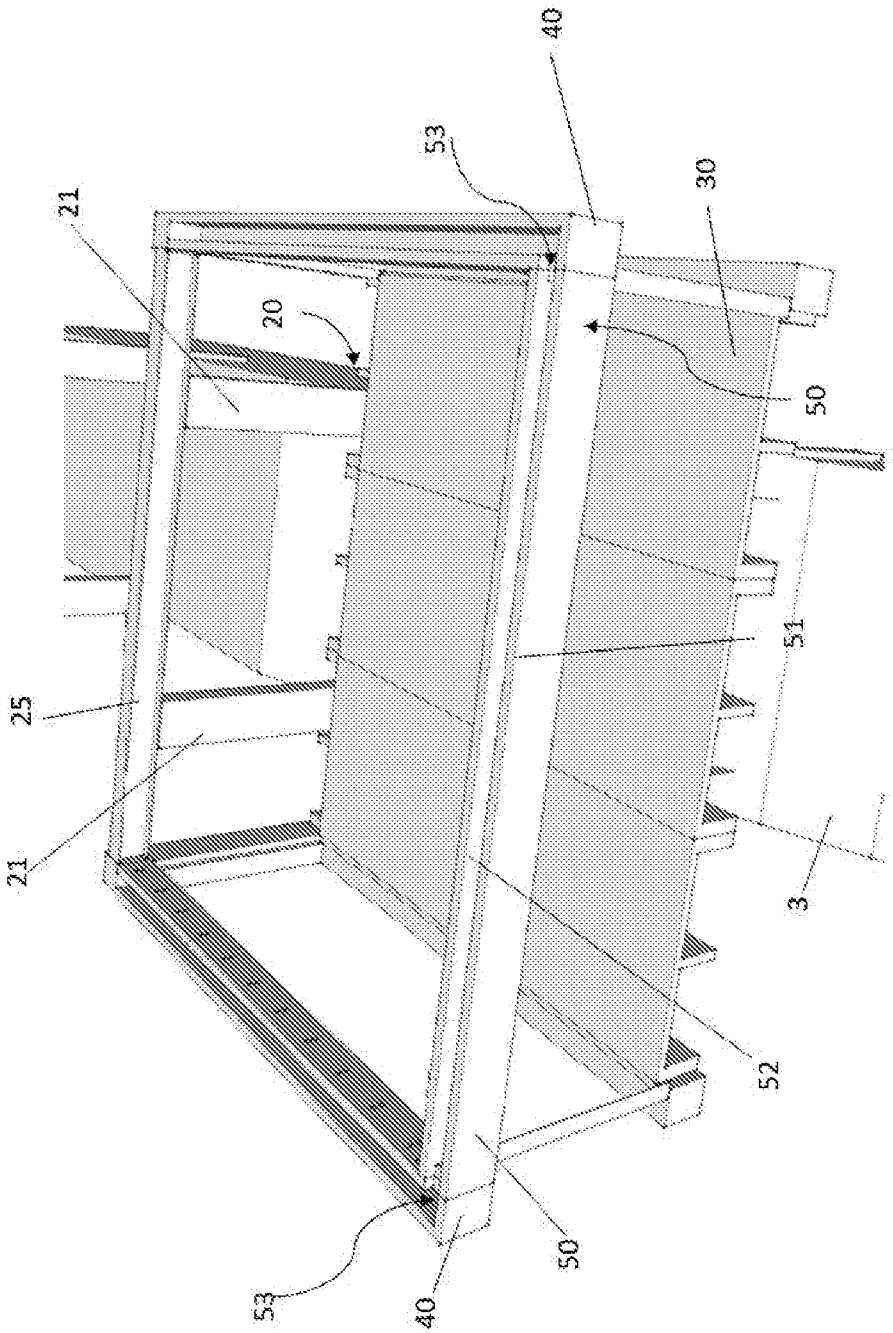

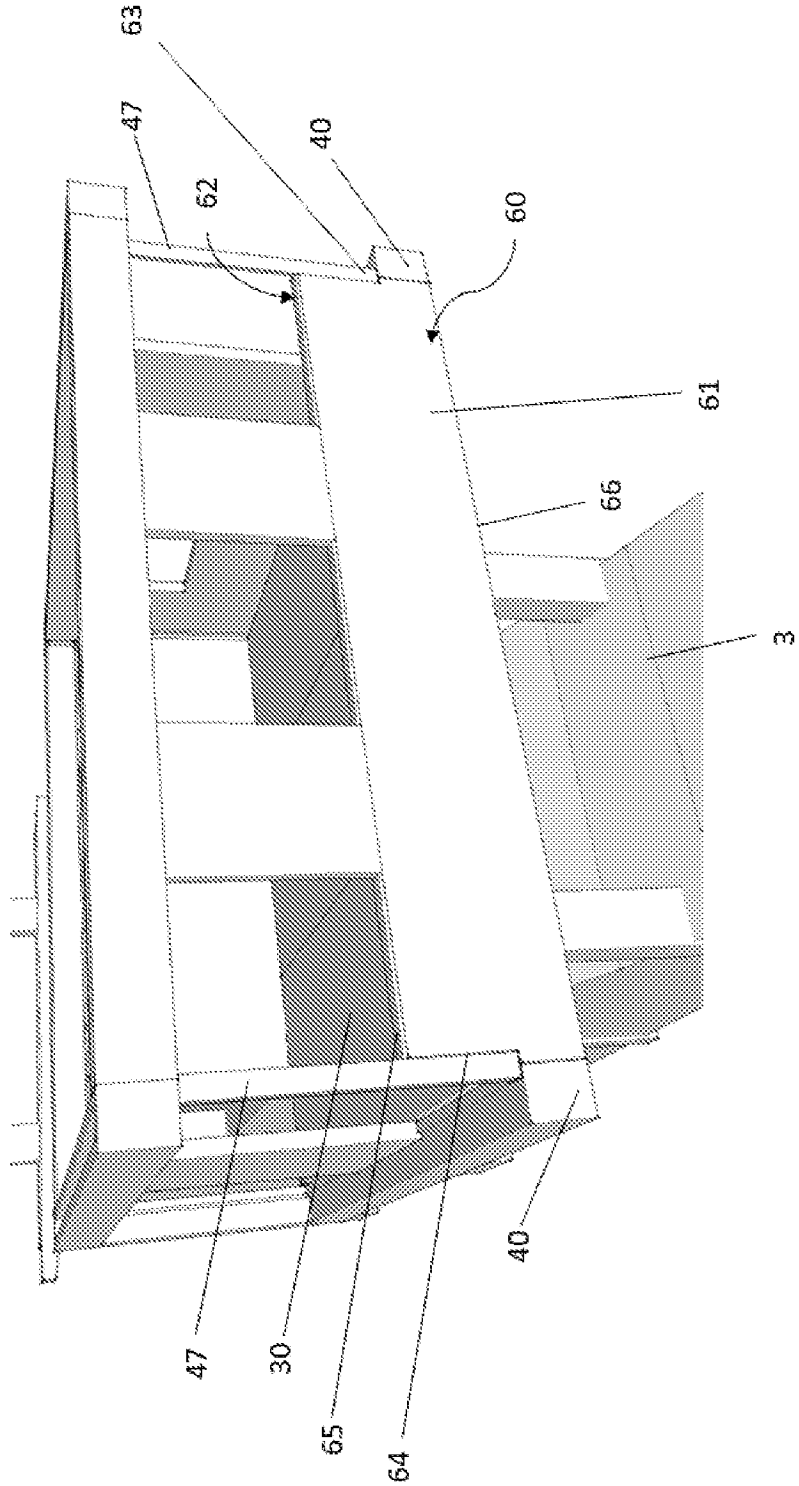

Figure 13

Figure 14

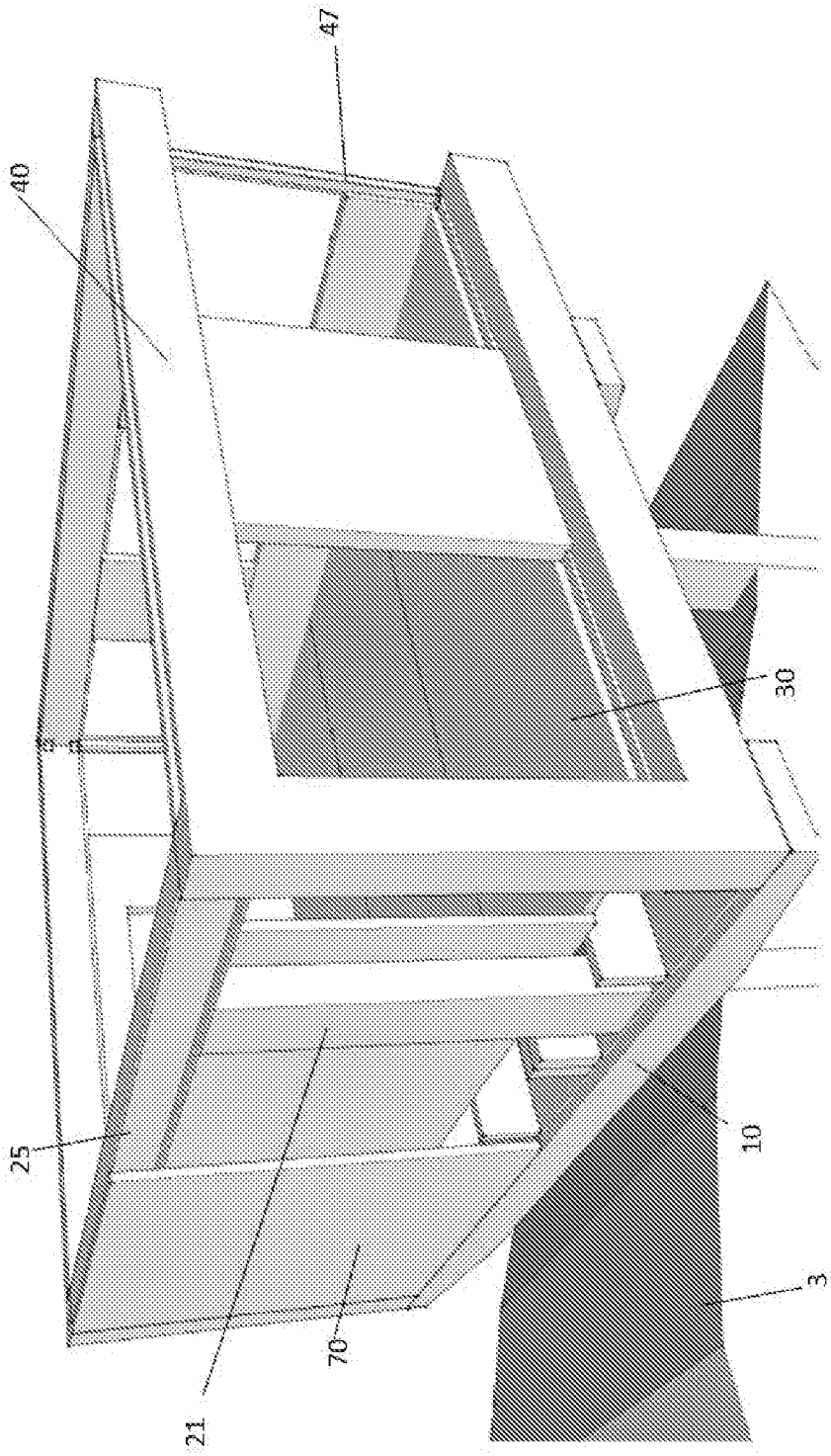

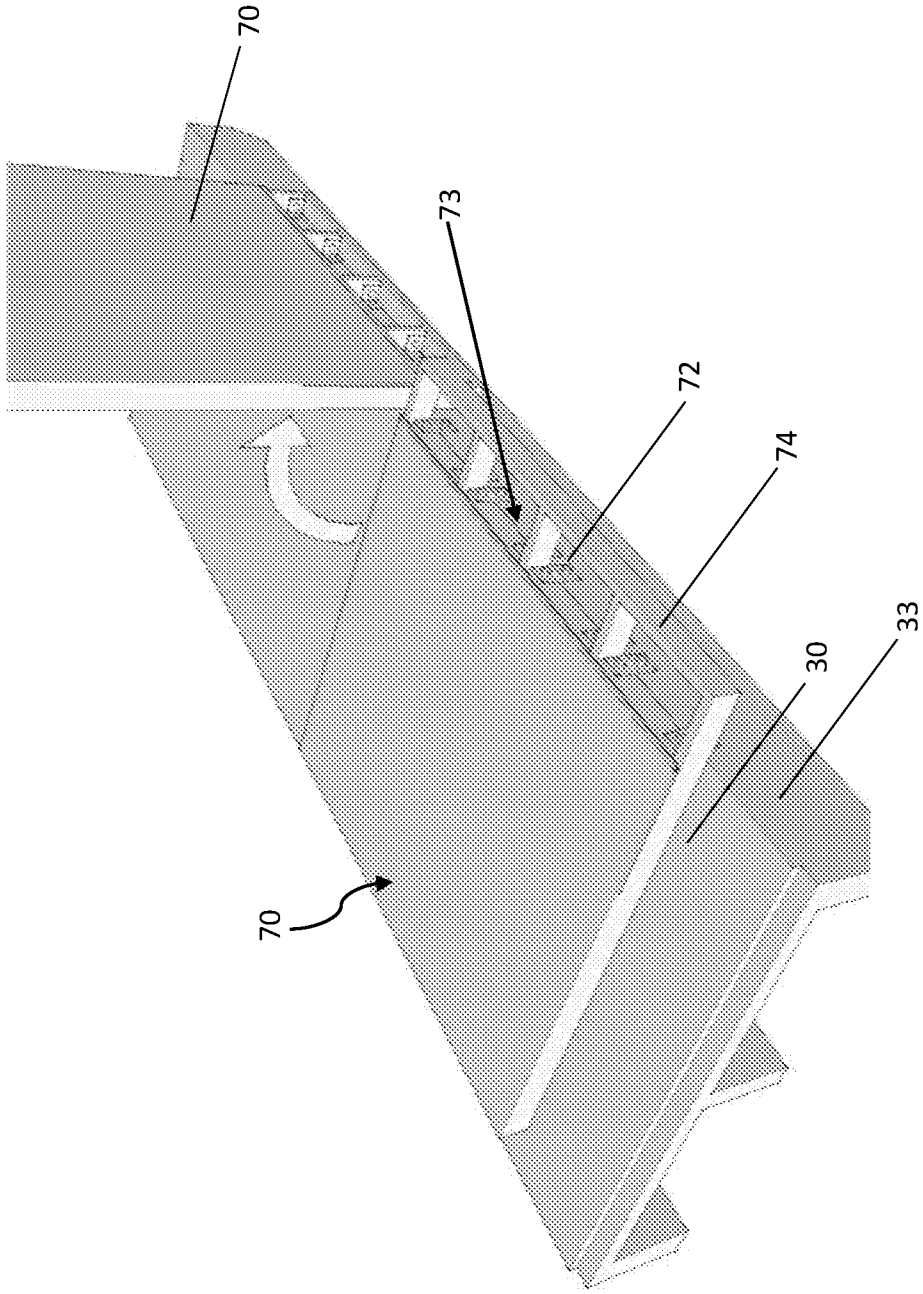

Figure 14A

Figure 15

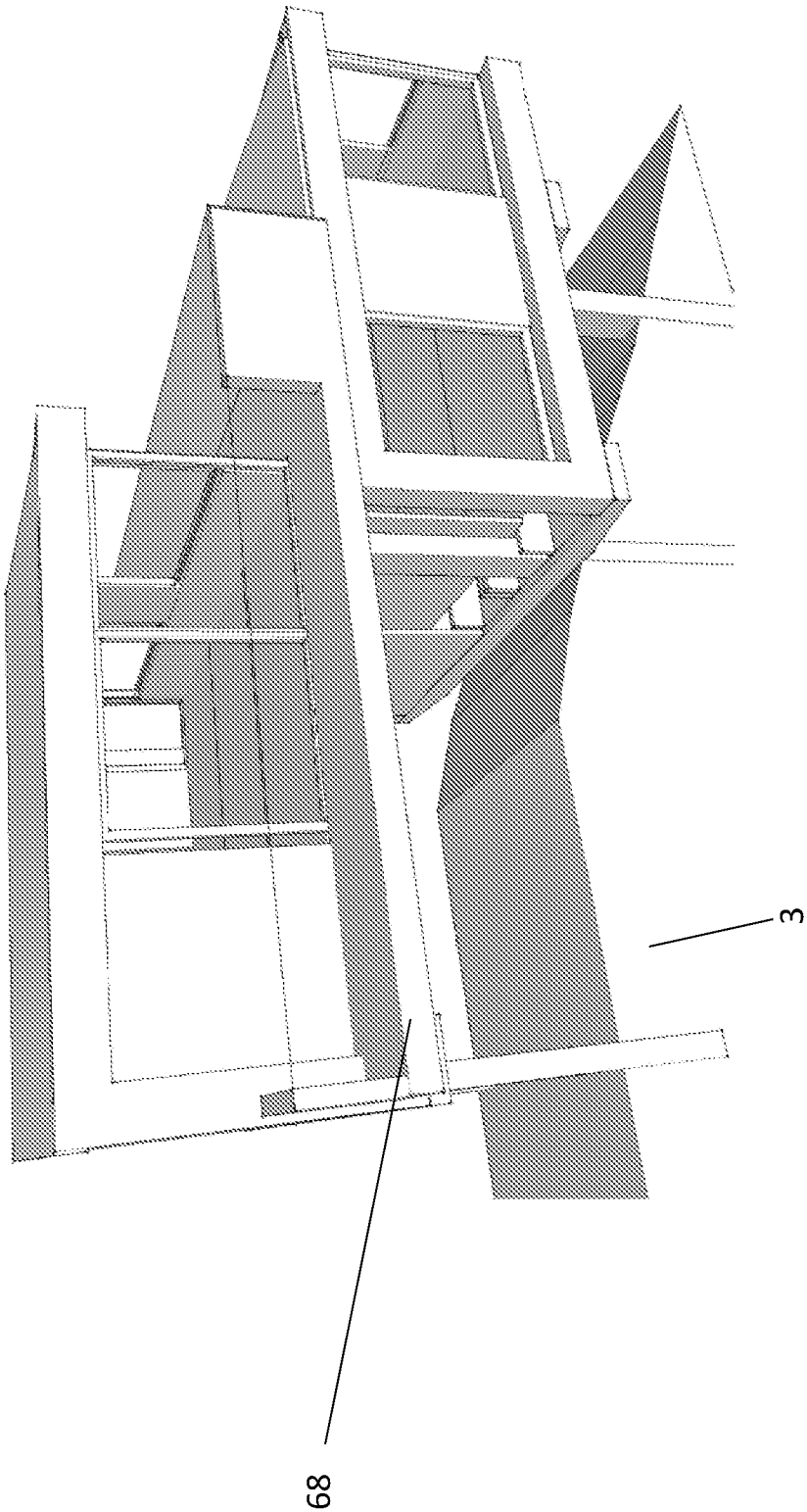

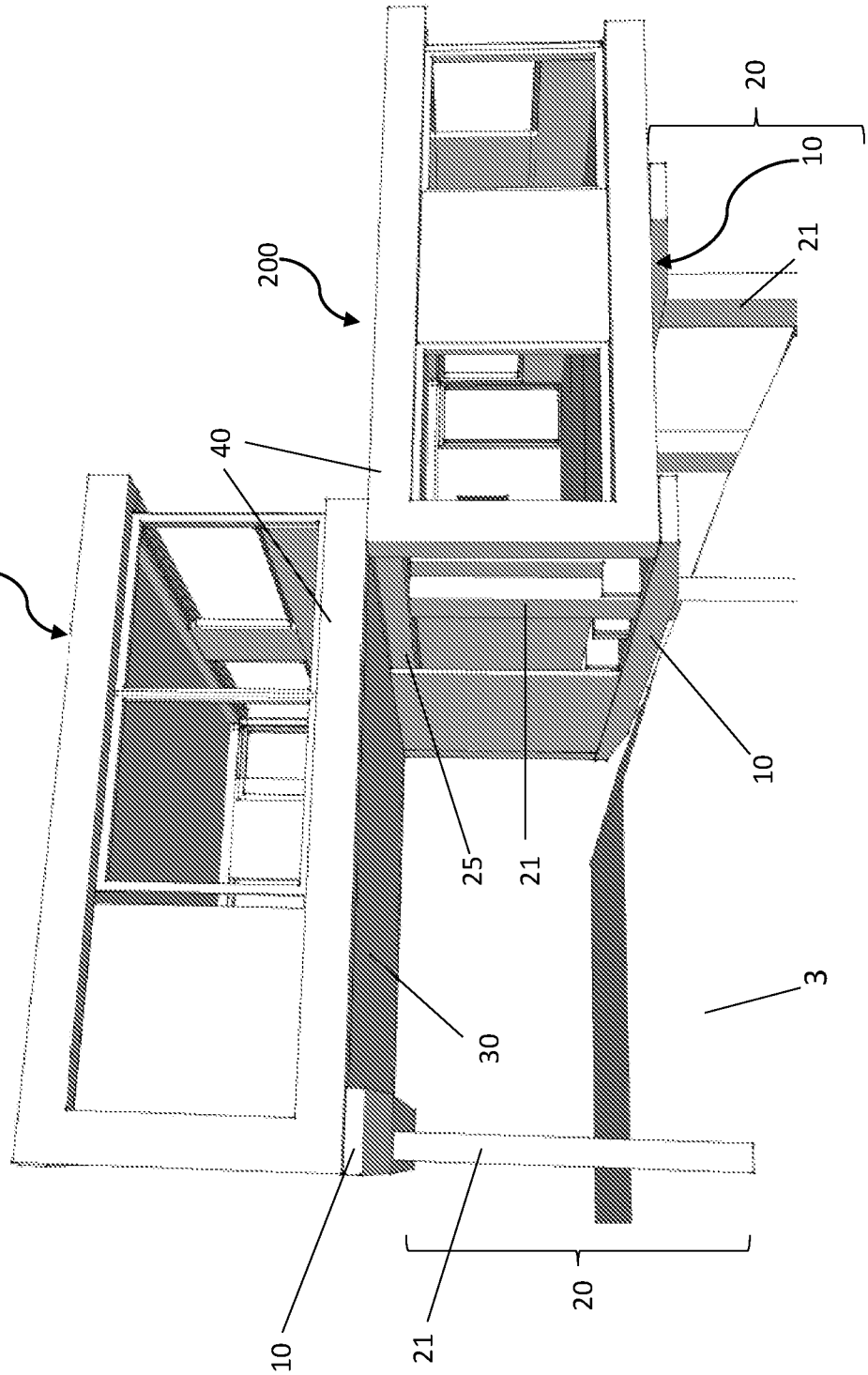

Figure 16

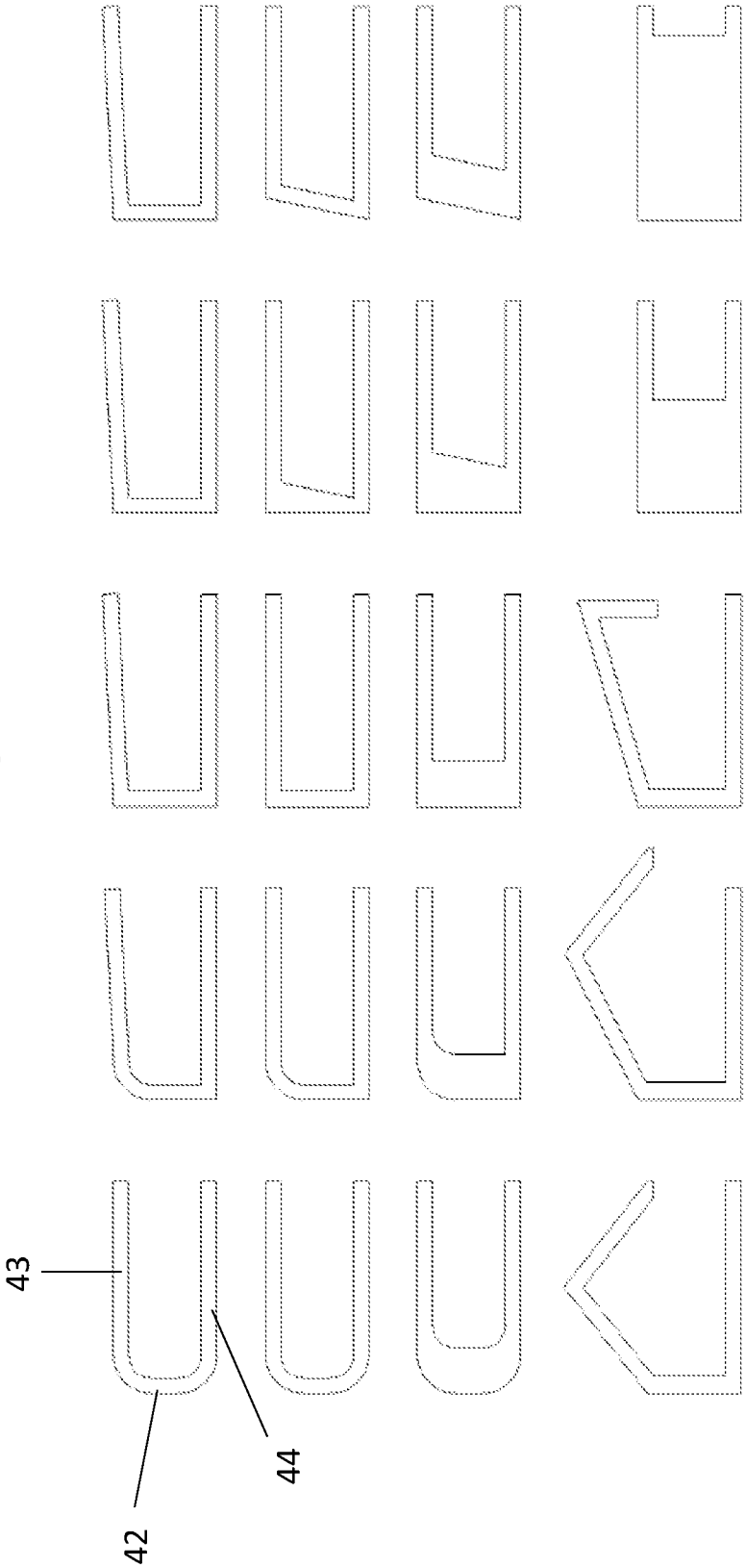

Figure 17

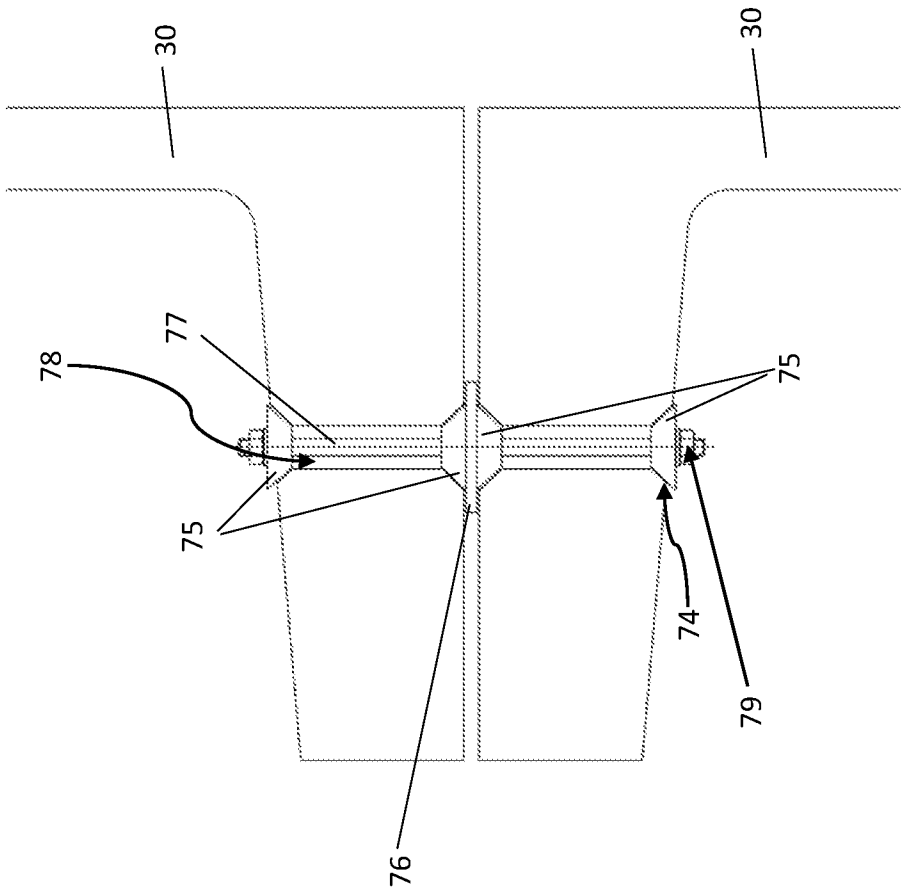

Figure 18

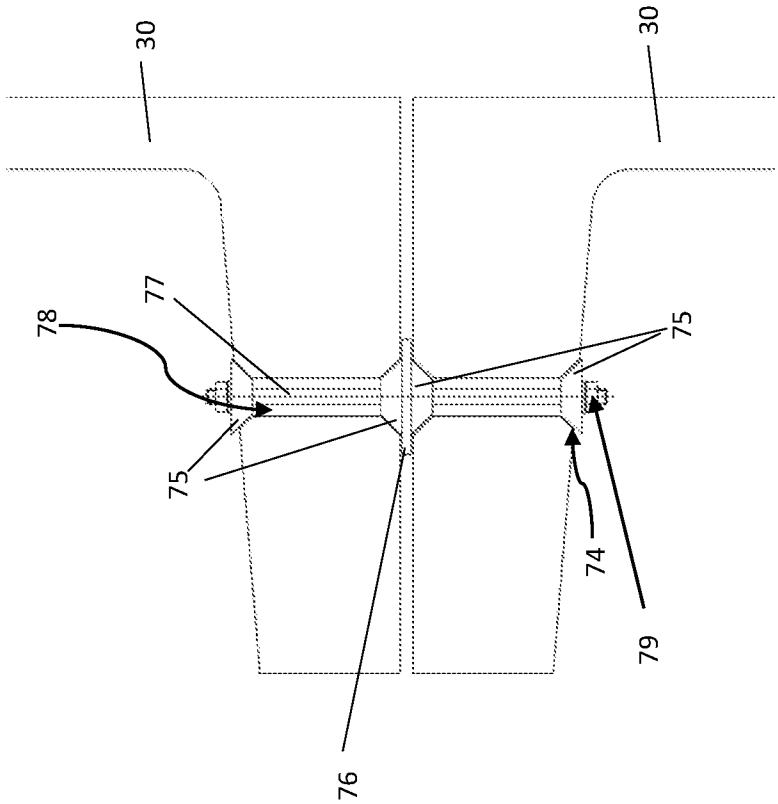

Figure 19

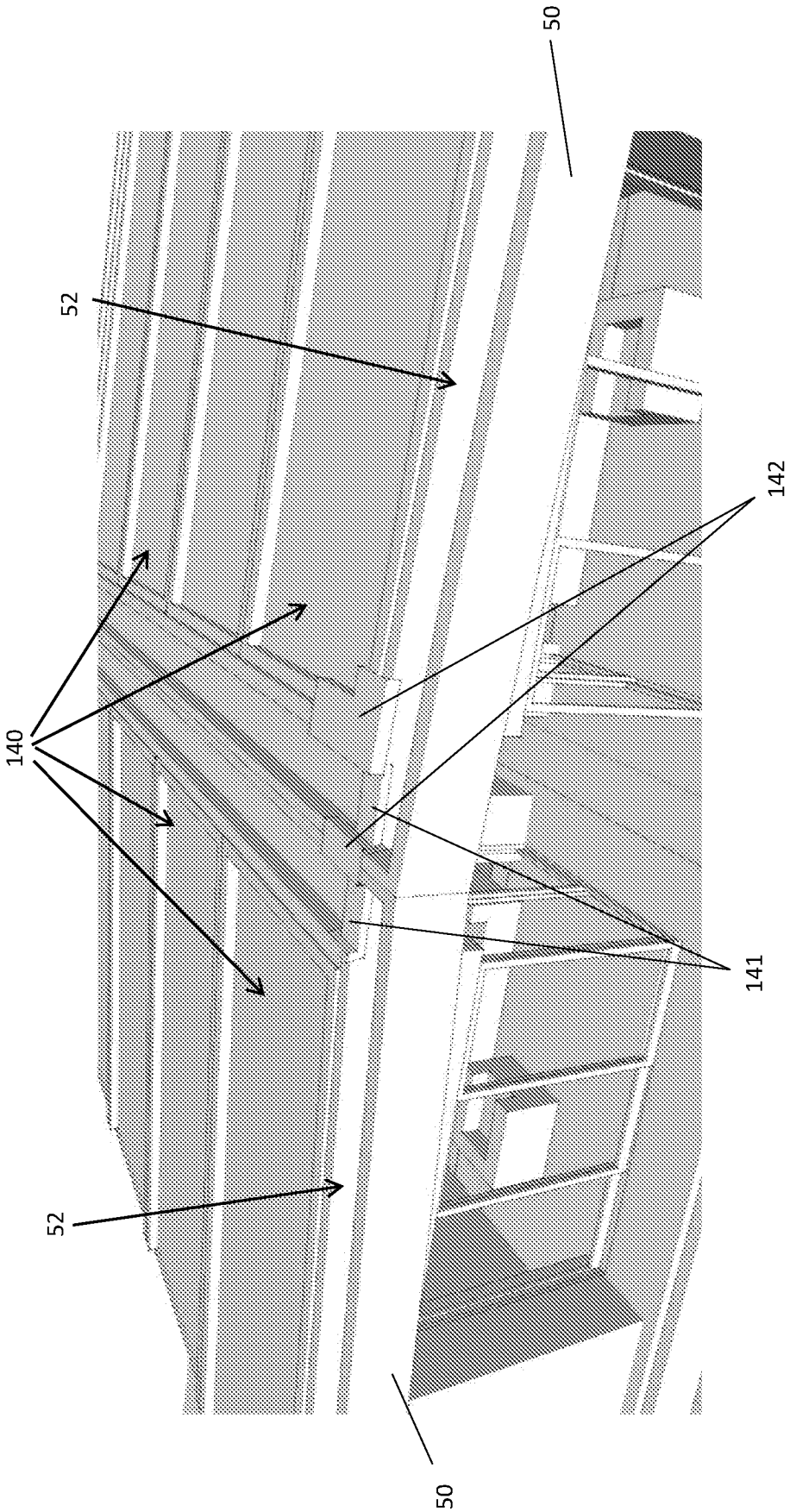

Figure 20

Figure 20A

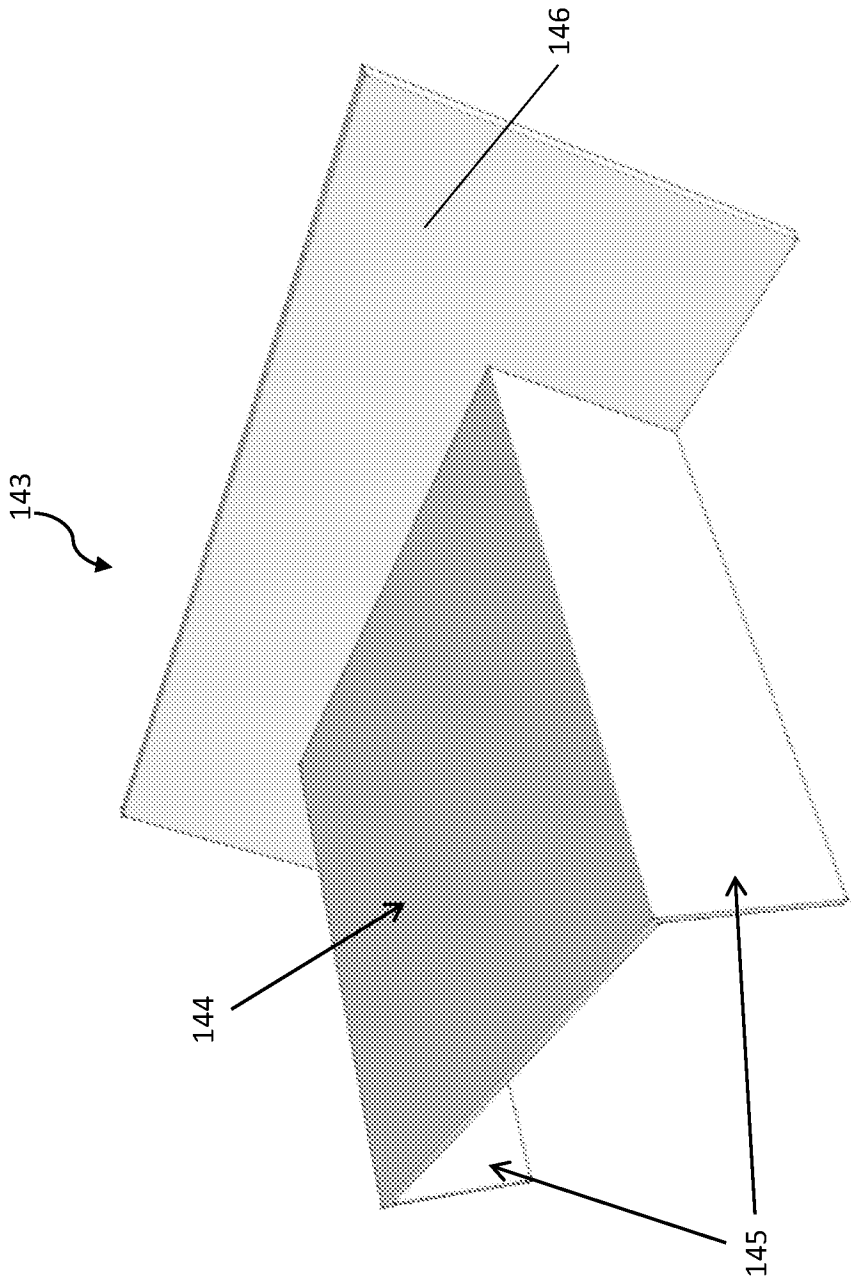

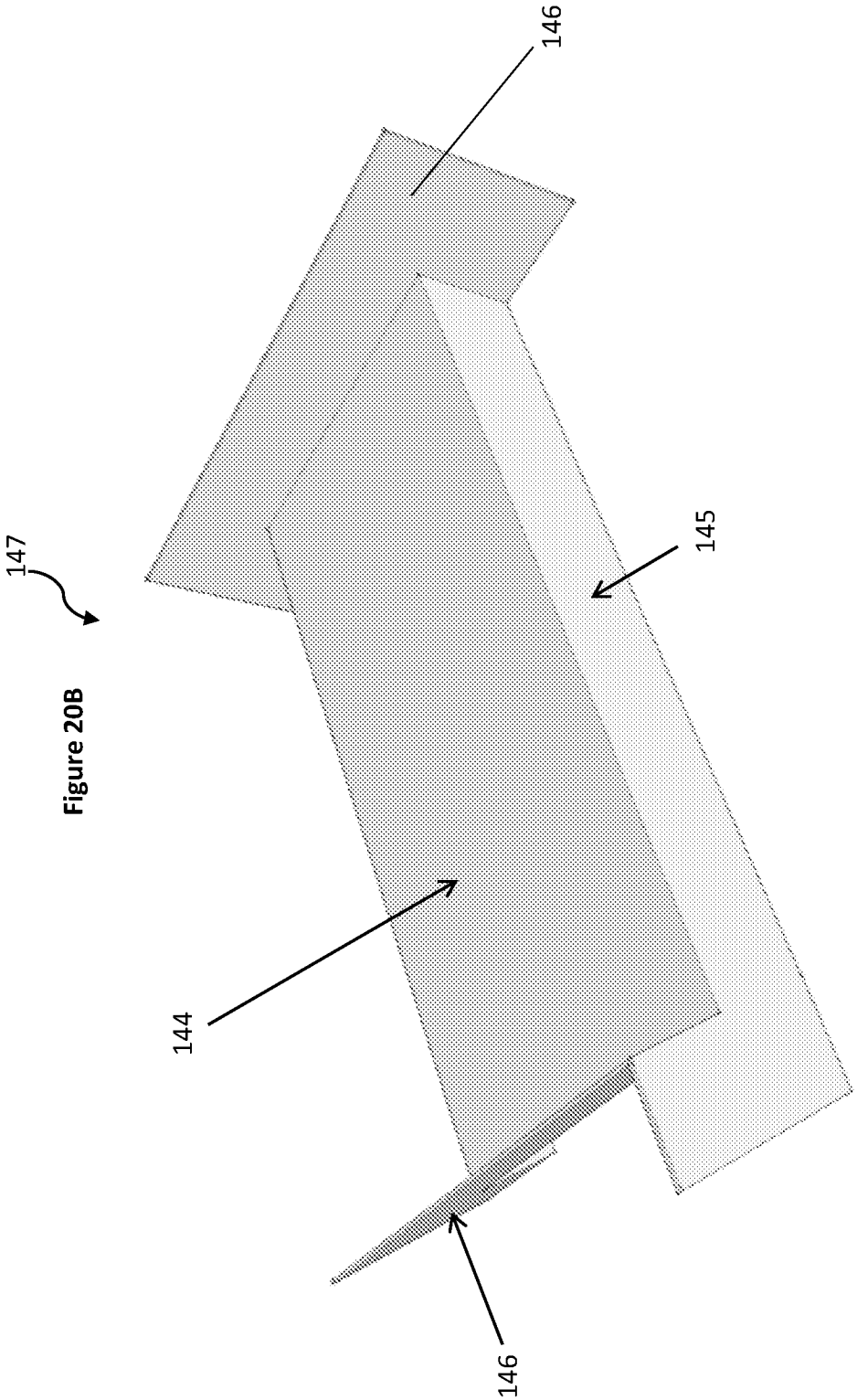

Figure 20B

Figure 21

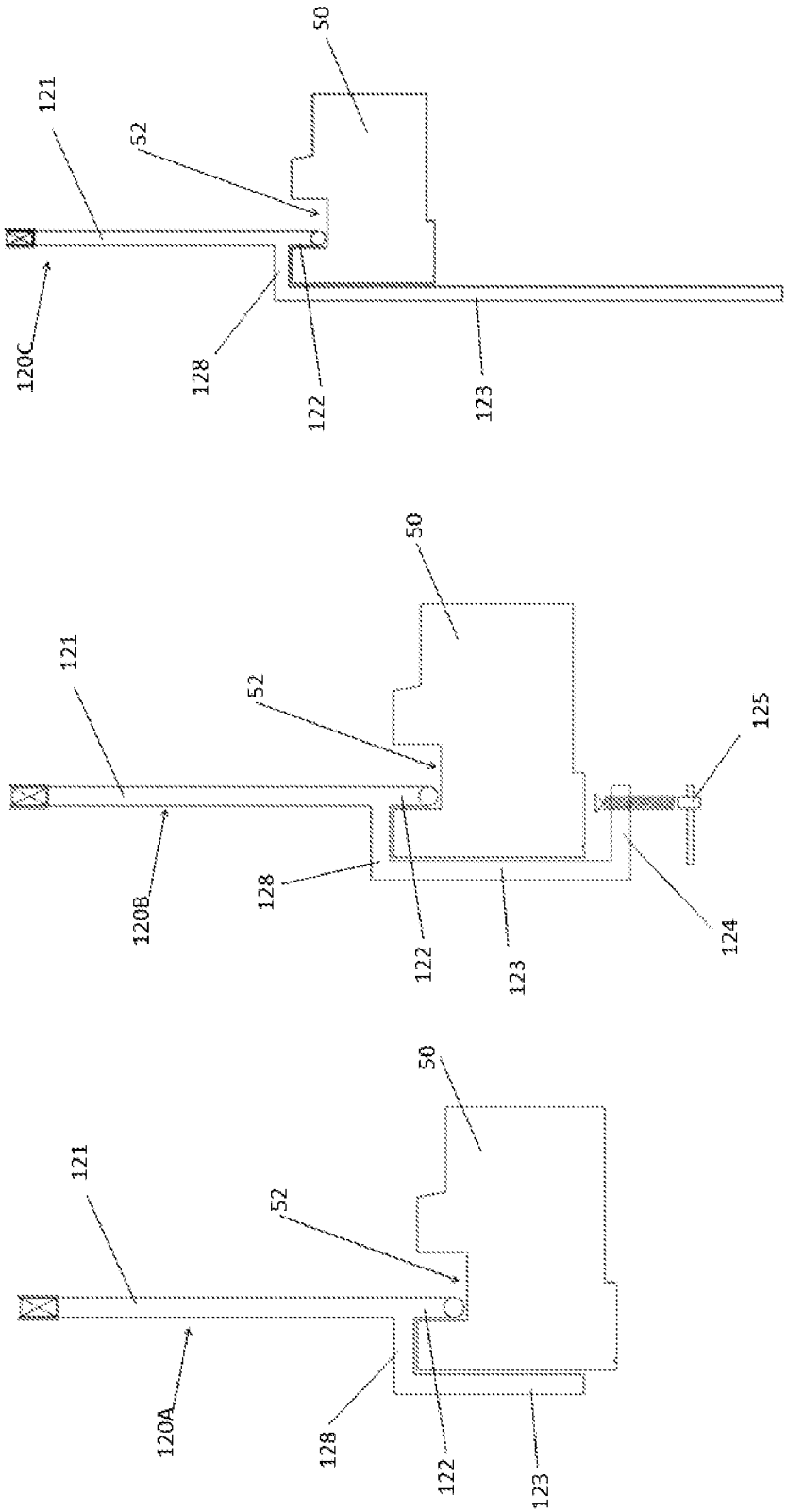
120C
121
52
50
128
122
123
120B
121
52
50
128
122
123
125
124
120A
121
52
50
128
122
123

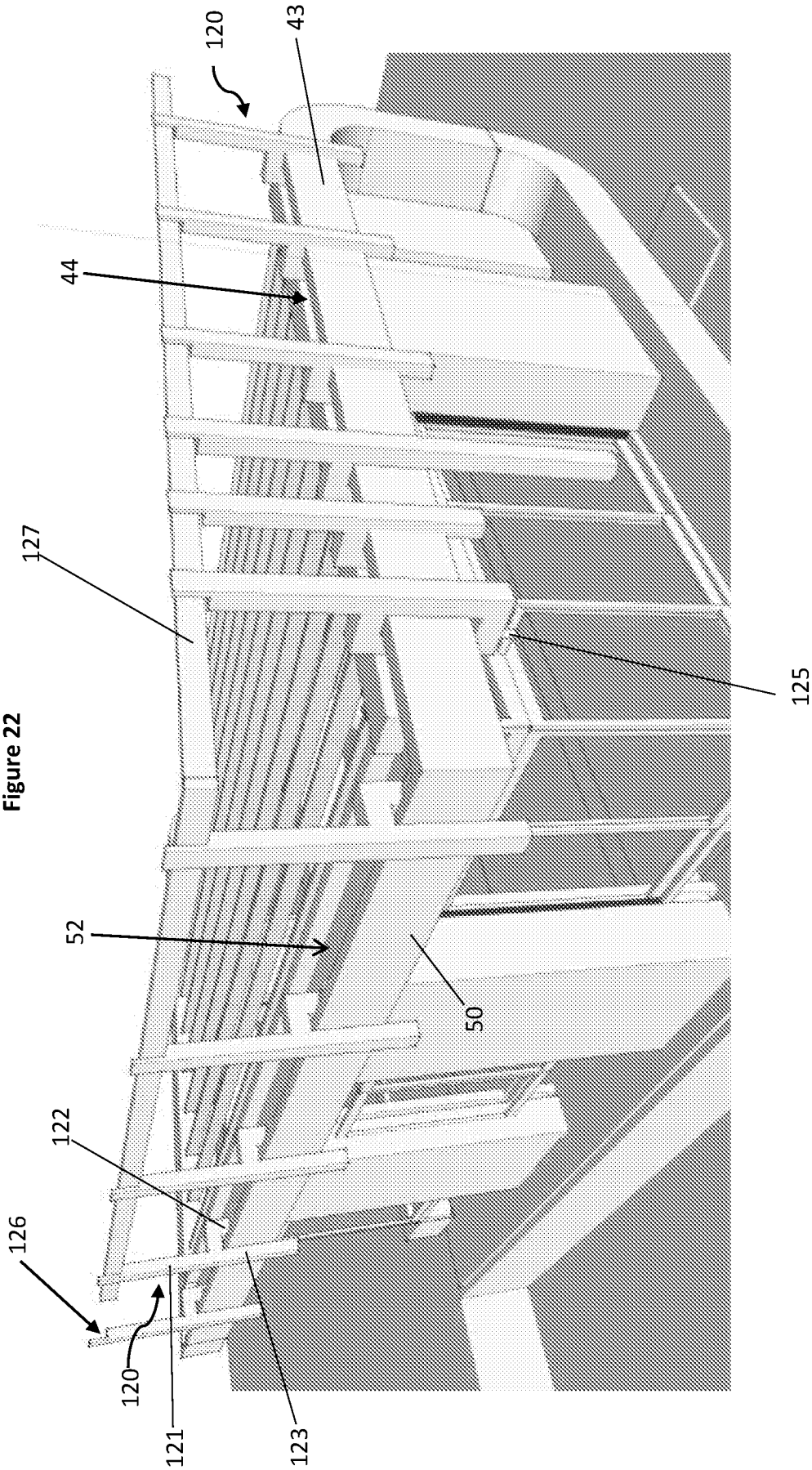

Figure 22

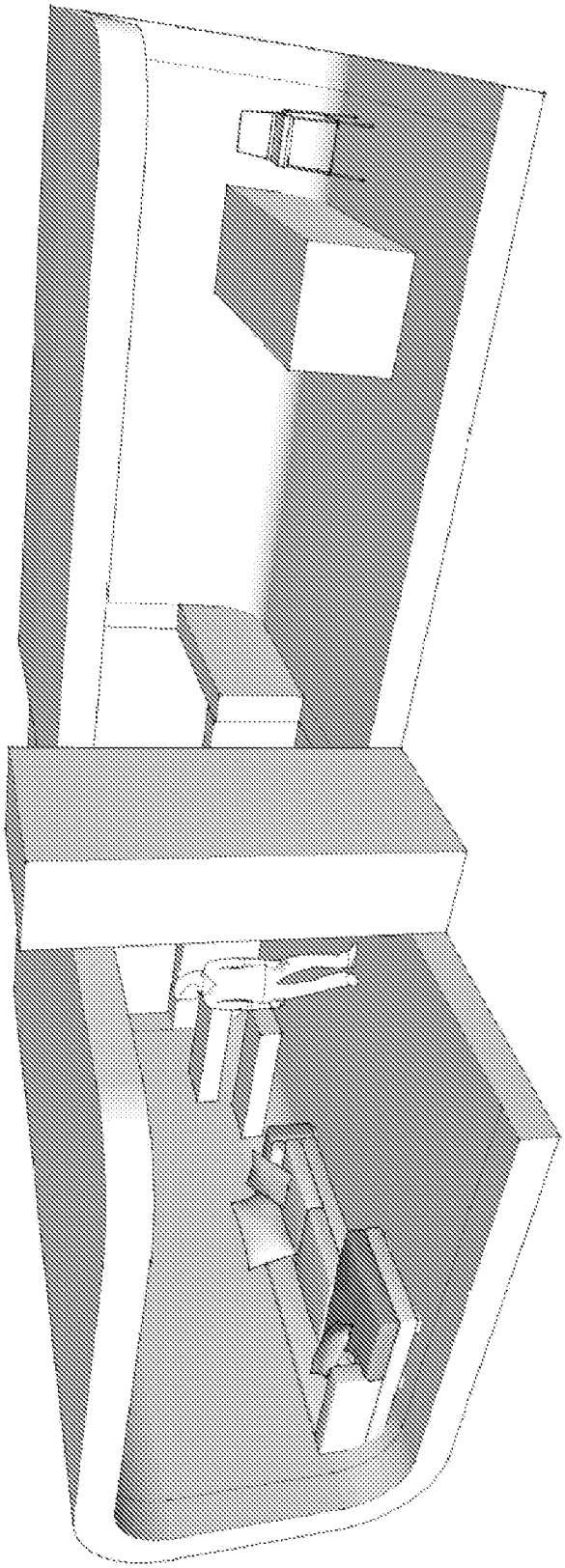

Figure 23

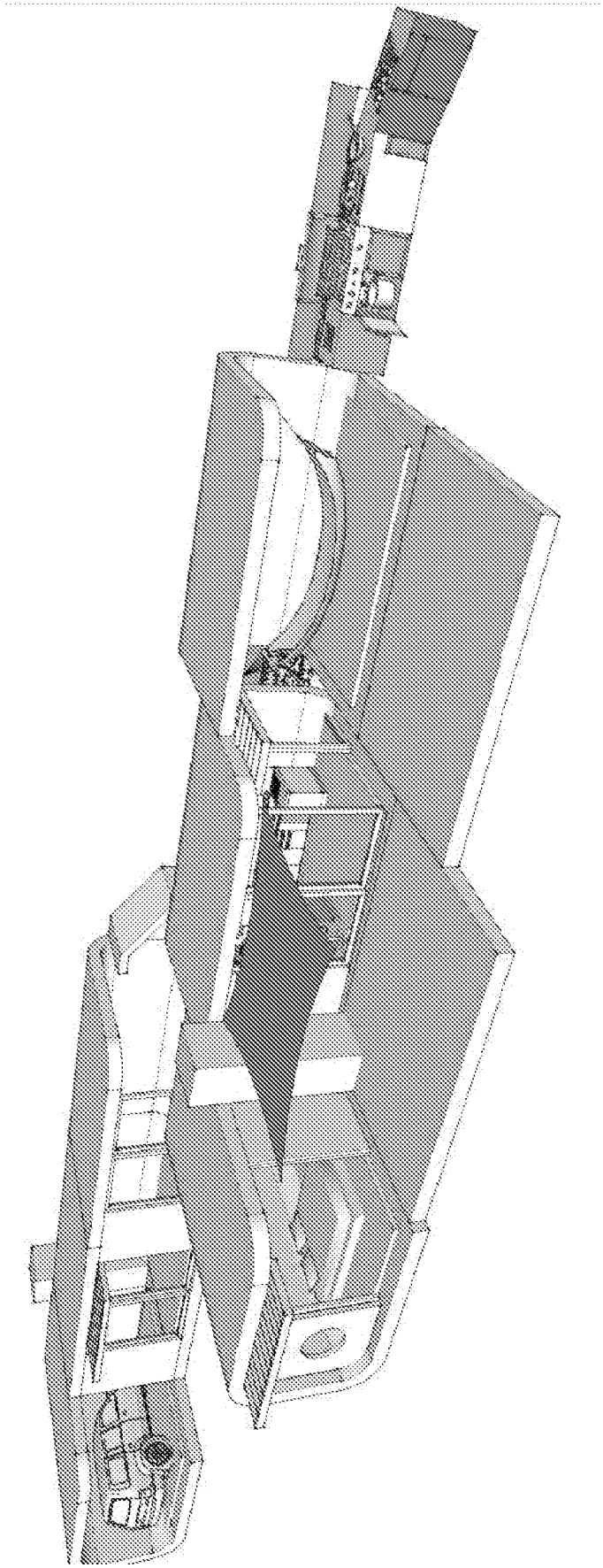

Figure 24

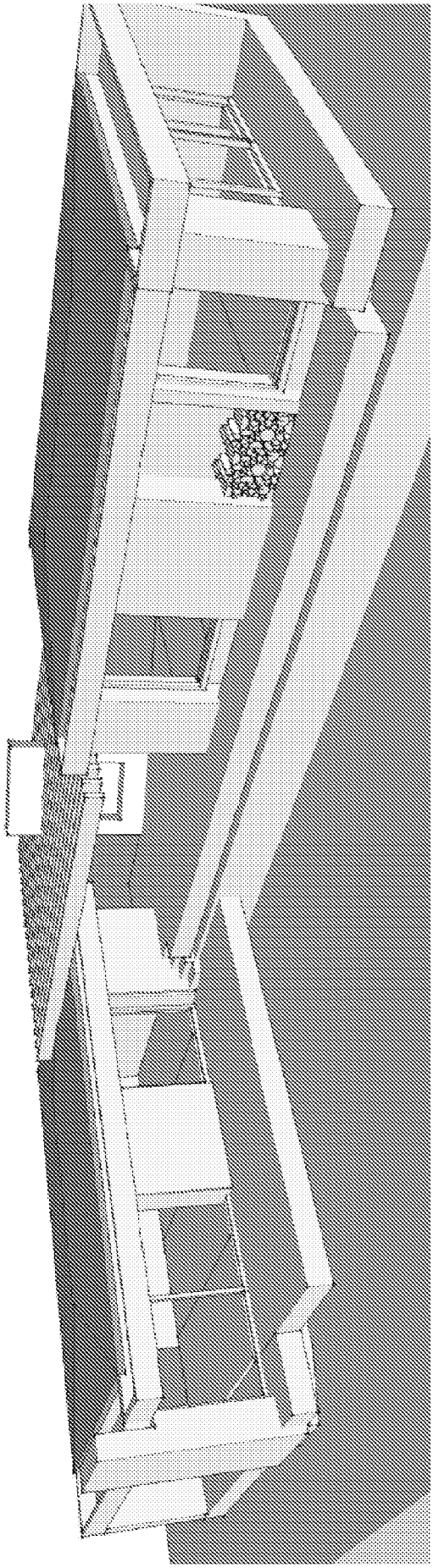

Figure 25

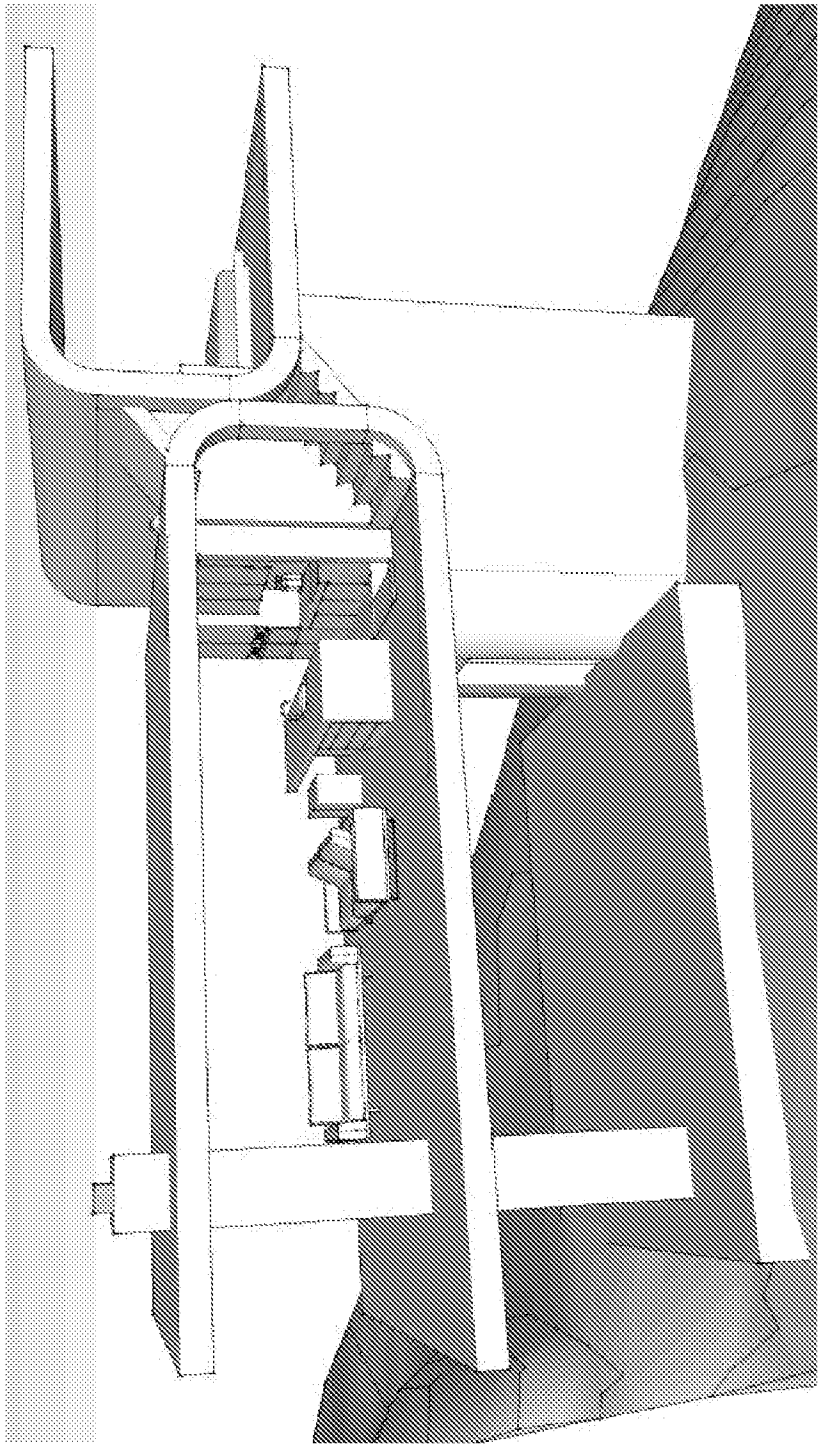

Figure 26

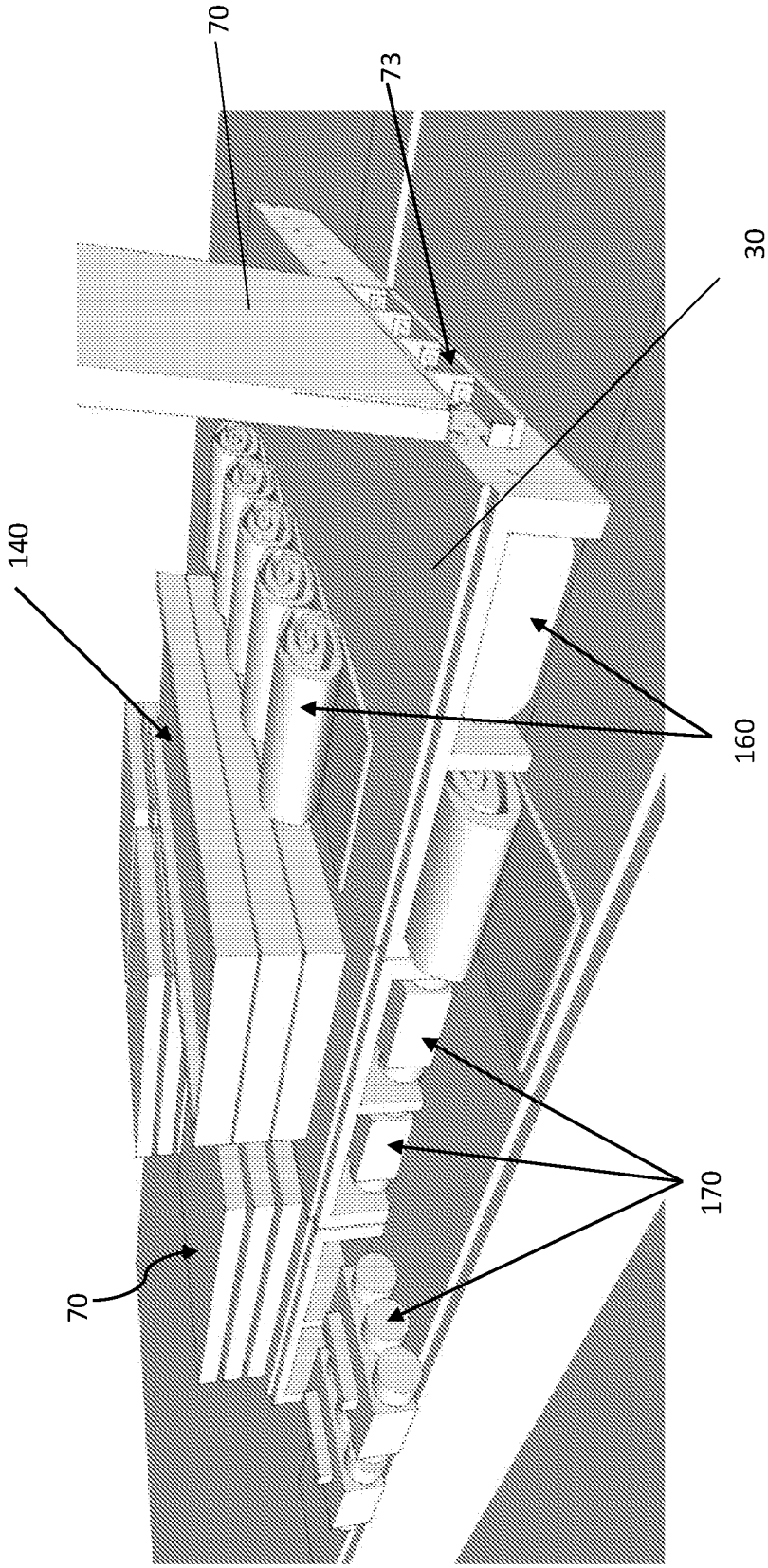

Figure 27

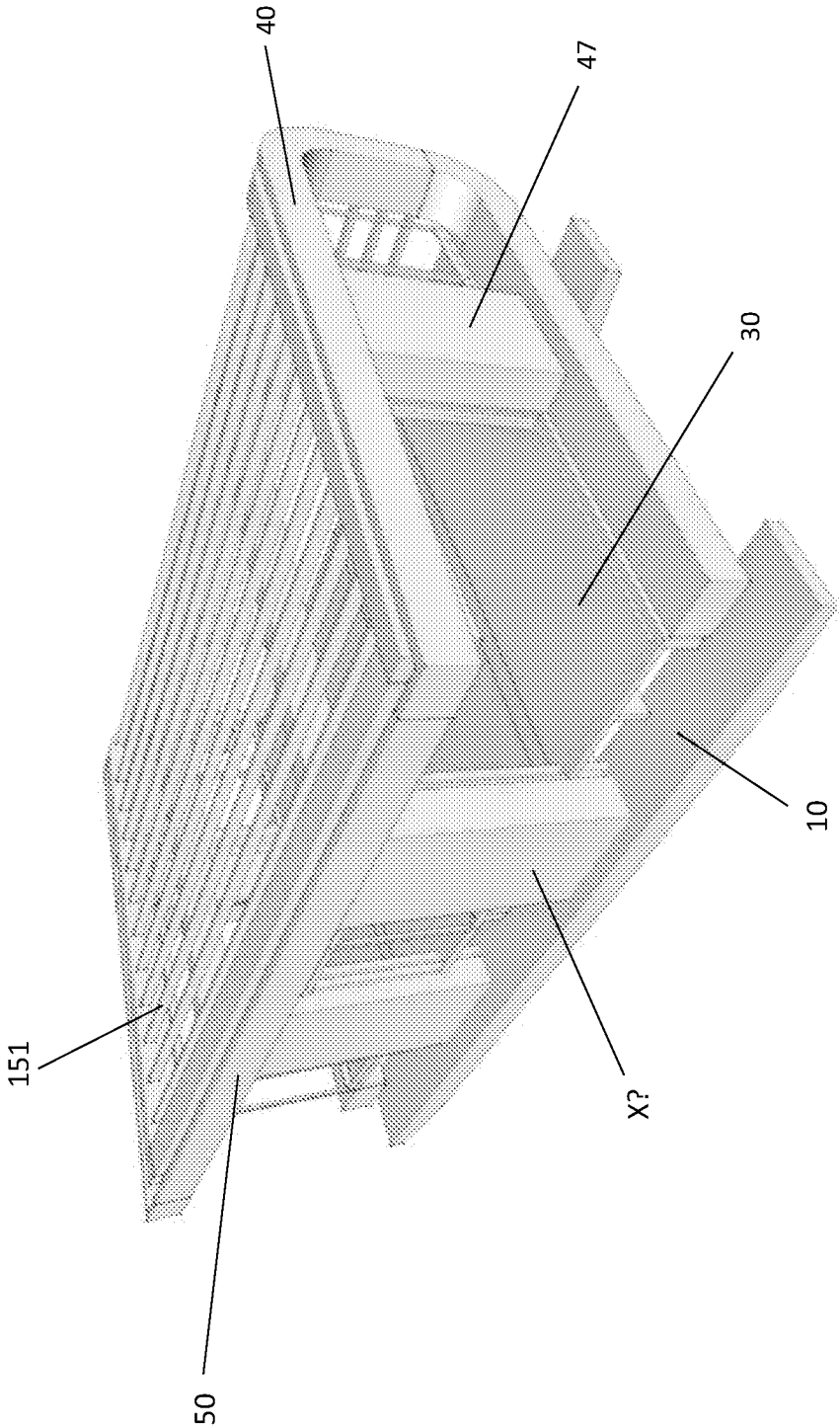

Figure 28

INTERNATIONAL SEARCH REPORT

International application No.
PCT/NZ2018/050113

A. CLASSIFICATION OF SUBJECT MATTER

E04B 1/04 (2006.01) E04B 1/08 (2006.01) E04B 1/12 (2006.01) E04B 1/14 (2006.01) E04B 1/348 (2006.01) E04B 1/343 (2006.01)

According to International Patent Classification (IPC) or to both national classification and IPC

B. FIELDS SEARCHED

Minimum documentation searched (classification system followed by classification symbols)

Documentation searched other than minimum documentation to the extent that such documents are included in the fields searched

Electronic data base consulted during the international search (name of data base and, where practicable, search terms used)

DATABASES: PATENW; IPC/C/CNO/LOW:E04B1/04, E04B1/08, E04B1/12, E04B1/14, E04B1/18, E04B1/343, E04B1/348; Keywords: Foundation, Base, Pre-cast, Pre-fabricat, Beam, Girder, Connect, Coupl, Sidewall, End-wall, Incline, Slop, Ground, Surface, Raise, Adjust, Vertical, Distance, Front, Upper and similar keywords. ESPACENET AND AUSPAT: Applicant/Inventor name searched; Viewed cited/citing of relevant documents. Google patents: Concrete modular buildings; concrete, modular buildings, piles; Concrete, modular buildings, piles, uneven ground. Applicant(s)/Inventor(s) name searched in internal databases provided by IP Australia.

C. DOCUMENTS CONSIDERED TO BE RELEVANT

Category*	Citation of document, with indication, where appropriate, of the relevant passages	Relevant to claim No.
	Documents are listed in the continuation of Box C	

[X] Further documents are listed in the continuation of Box C [X] See patent family annex

* Special categories of cited documents:

"A" document defining the general state of the art which is not considered to be of particular relevance

"E" earlier application or patent but published on or after the international filing date

"L" document which may throw doubts on priority claim(s) or which is cited to establish the publication date of another citation or other special reason (as specified)

"O" document referring to an oral disclosure, use, exhibition or other means

"P" document published prior to the international filing date but later than the priority date claimed

"T" later document published after the international filing date or priority date and not in conflict with the application but cited to understand the principle or theory underlying the invention

"X" document of particular relevance; the claimed invention cannot be considered novel or cannot be considered to involve an inventive step when the document is taken alone

"Y" document of particular relevance; the claimed invention cannot be considered to involve an inventive step when the document is combined with one or more other such documents, such combination being obvious to a person skilled in the art

"&" document member of the same patent family

Date of the actual completion of the international search	Date of mailing of the international search report
30 November 2018	30 November 2018
Name and mailing address of the ISA/AU	**Authorised officer**
AUSTRALIAN PATENT OFFICE PO BOX 200, WODEN ACT 2606, AUSTRALIA Email address: pct@ipaustralia.gov.au	Victor Maluki AUSTRALIAN PATENT OFFICE (ISO 9001 Quality Certified Service) Telephone No. +61262256112

INTERNATIONAL SEARCH REPORT C (Continuation). DOCUMENTS CONSIDERED TO BE RELEVANT		International application No. **PCT/NZ2018/050113**
Category*	Citation of document, with indication, where appropriate, of the relevant passages	Relevant to claim No.
X	WO 2015/145772 A1 (UNKNOWN) 13 April 2017 Entire document	1 - 16, 20, 22 - 27, 29 - 31, 33 - 54
X	WO 2003/097950 A2 (IWOOD SINGAPORE PTE LD) 27 November 2003 Entire document	1, 2 - 9, 11 - 42, 44 - 54
A	GB 2456574 A (LIAM CAMPION) 22 July 2009 Entire document	1 - 54
A	WO 2015/039186 A1 (AUSCO MODULAR PTY LIMITED) 26 March 2015 Entire document	1 - 54
A	EP 0134893 A2 (TAMBURINI SPA) 27 March 1985 Entire document	1 - 54
A	CA 897389 A (ELCON AG) 11 April 1972 Entire document	1 - 54
A	GB 1330844 A (ELCON A.G) 19 September 1973 Entire document	1 - 54

INTERNATIONAL SEARCH REPORT Information on patent family members	International application No. **PCT/NZ2018/050113**

This Annex lists known patent family members relating to the patent documents cited in the above-mentioned international search report. The Australian Patent Office is in no way liable for these particulars which are merely given for the purpose of information.

Patent Document/s Cited in Search Report		Patent Family Member/s	
Publication Number	**Publication Date**	**Publication Number**	**Publication Date**
WO 2015/145772 A1	13 April 2017	WO 2015145772 A1	01 Oct 2015
		JP 6050549 B2	21 Dec 2016
		JP WO2015145772 A1	13 Apr 2017
WO 2003/097950 A2	27 November 2003	WO 03097950 A2	27 Nov 2003
		AU 2003269072 A1	02 Dec 2003
		AU 2003269072 B2	16 Aug 2007
		EP 1532330 A2	25 May 2005
		SG 131743 A1	28 May 2007
GB 2456574 A	22 July 2009	GB 2456574 A	22 Jul 2009
WO 2015/039186 A1	26 March 2015	WO 2015039186 A1	26 Mar 2015
		NZ 630632 A	29 Apr 2016
EP 0134893 A2	27 March 1985	EP 0134893 A2	27 Mar 1985
CA 897389 A	11 April 1972	CA 897389 A	11 Apr 1972
GB 1330844 A	19 September 1973	GB 1330844 A	19 Sep 1973
		AT 320930 B	10 Mar 1975
		BE 757271 A	16 Mar 1971
		CA 933376 A	11 Sep 1973
		DE 2049552 A1	22 Apr 1971
		FI 49451 B	28 Feb 1975
		IL 35426 A	10 Sep 1974
		JP S5014805 B1	30 May 1975
		LU 61843 A1	02 May 1971
		NL 7014734 A	14 Apr 1971
		SE 387685 B	13 Sep 1976
		ZA 7006671 B	27 May 1971

End of Annex

Due to data integration issues this family listing may not include 10 digit Australian applications filed since May 2001.