L. D. JANNELL.

LIQUID AND CUP DISPENSING APPARATUS.

APPLICATION FILED DEC. 19, 1908.

1,035,348.

Patented Aug. 13, 1912

6 SHEETS-SHEET 1.

Fig. 1

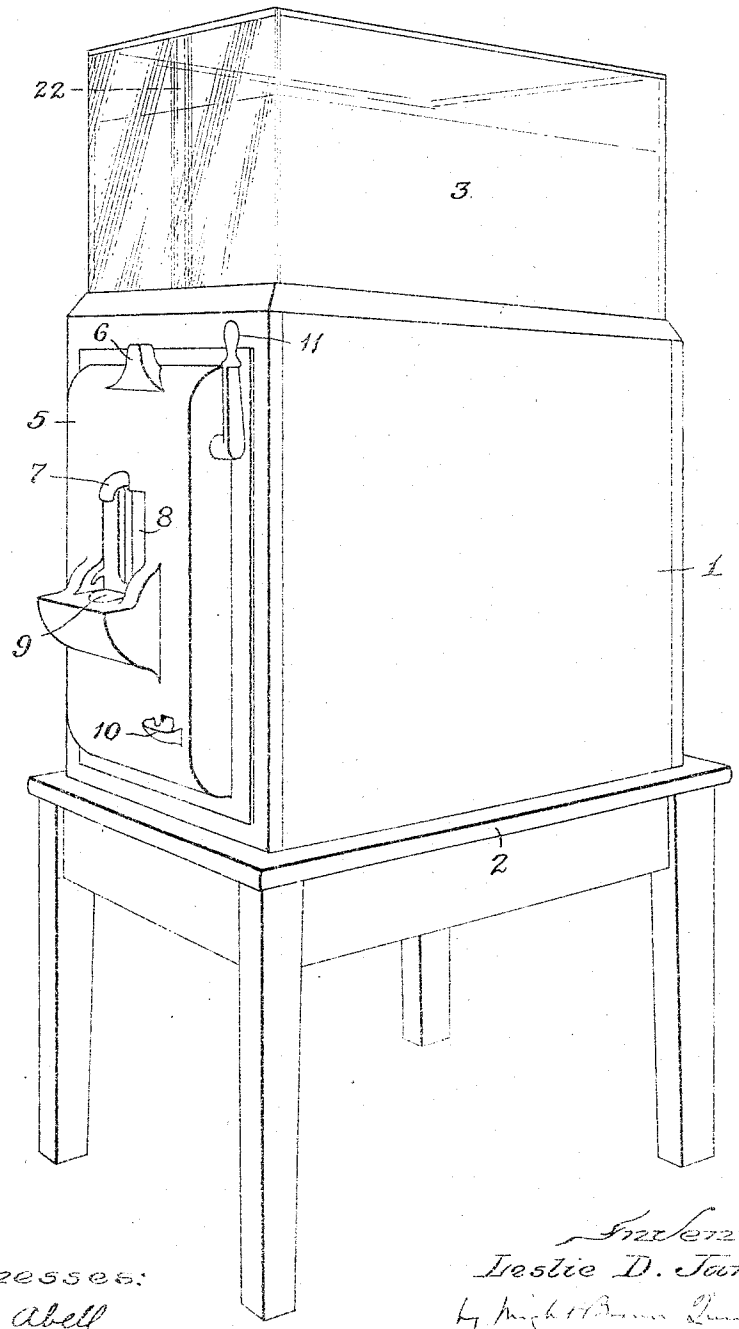

Witnesses:
W. P. Abell
F. R. Roulstone.

Inventor
Leslie D. Jannell
by Wright Brown Quinby & Woodward
Attorneys

L. D. JANNELL.

LIQUID AND CUP DISPENSING APPARATUS.

APPLICATION FILED DEC. 19, 1908.

1,035,348. Patented Aug. 13, 1912.

5 SHEETS—SHEET 2.

Fig. 3

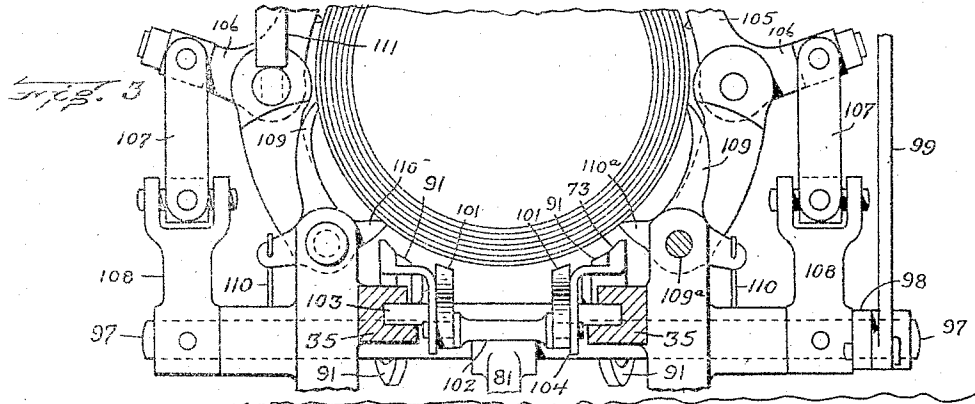

Fig. 2

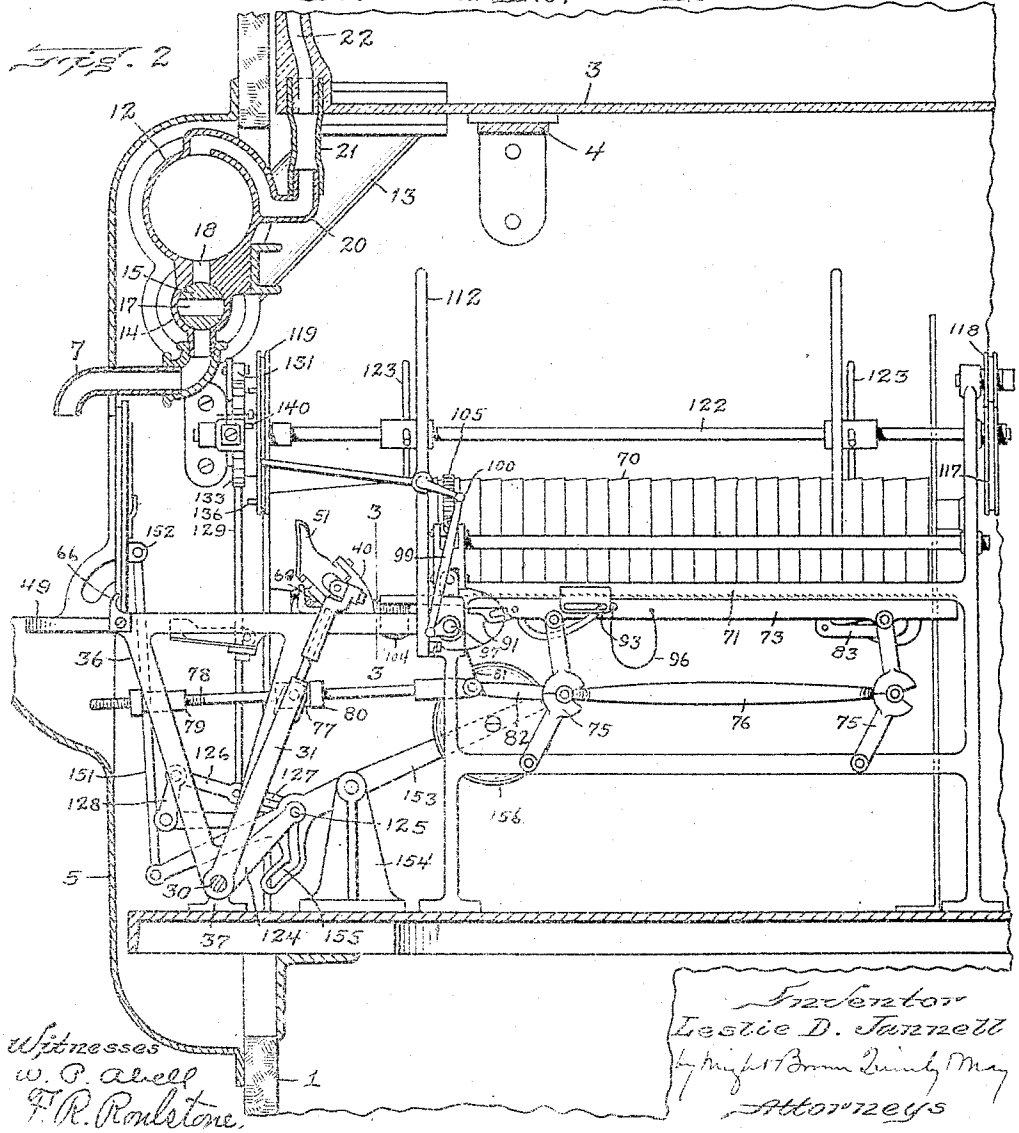

Witnesses
W. B. Atwell
F. R. Ronkstone.

Inventor
Leslie D. Jannell
by Wright Brown Quinby & May
Attorneys

L. D. JANNELL.

LIQUID AND CUP DISPENSING APPARATUS.

APPLICATION FILED DEC. 19, 1908.

1,035,348.

Patented Aug. 13, 1912.

5 SHEETS—SHEET 3.

Fig. 4

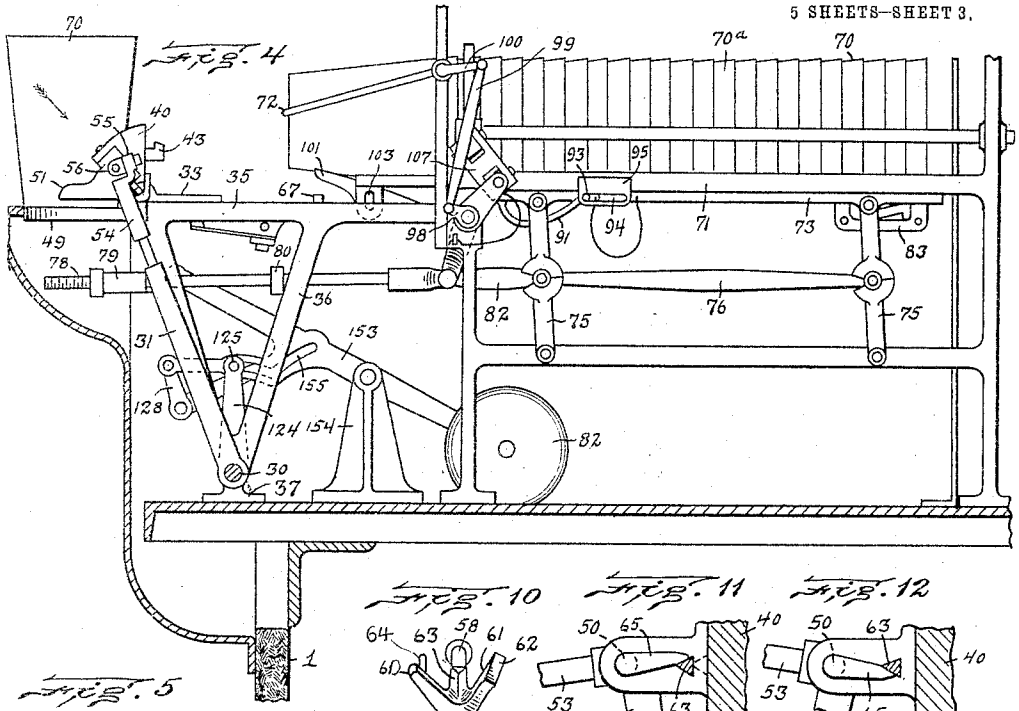

Fig. 10

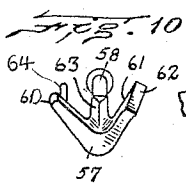

Fig. 11

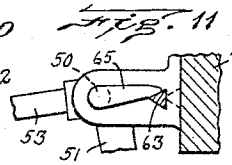

Fig. 12

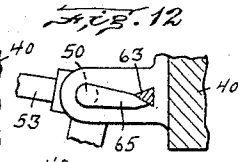

Fig. 5

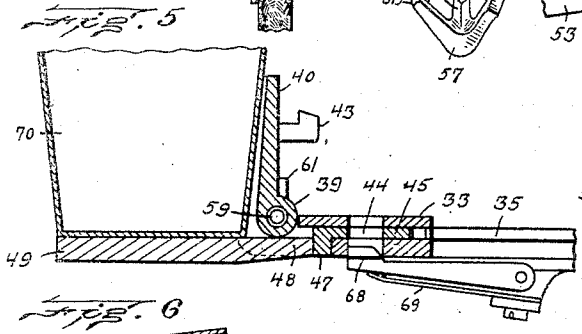

Fig. 8

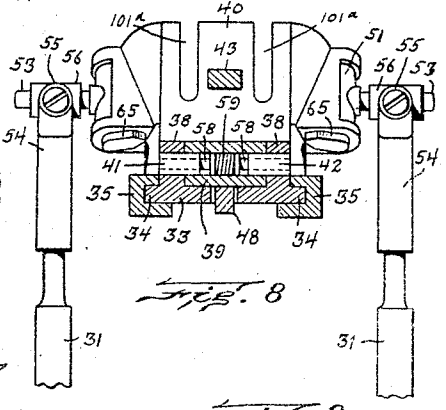

Fig. 6

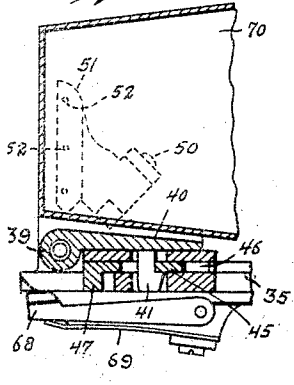

Fig. 7

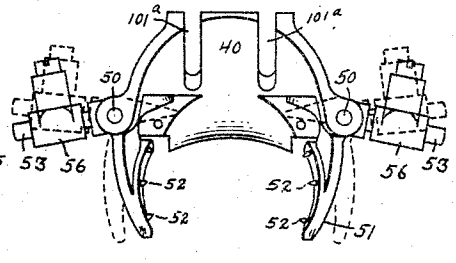

Fig. 9

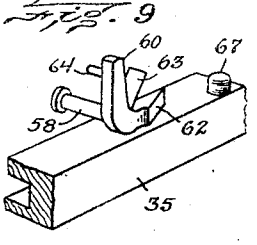

Witnesses:
W. P. Abell
F. R. Roulstone.

Inventor
Leslie D. Jannell
by Wright Brown Quinby & May
Attorneys

L. D. JANNELL.

LIQUID AND CUP DISPENSING APPARATUS.

APPLICATION FILED DEC. 19, 1908.

1,035,348. Patented Aug. 13, 1912.

5 SHEETS—SHEET 4.

Fig. 14

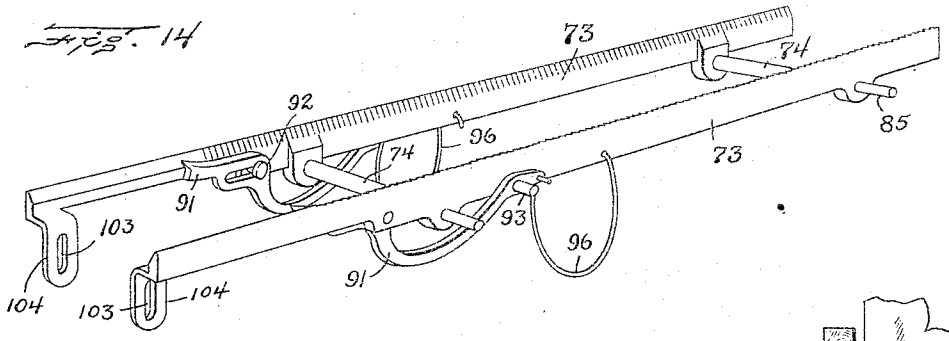

Fig. 13

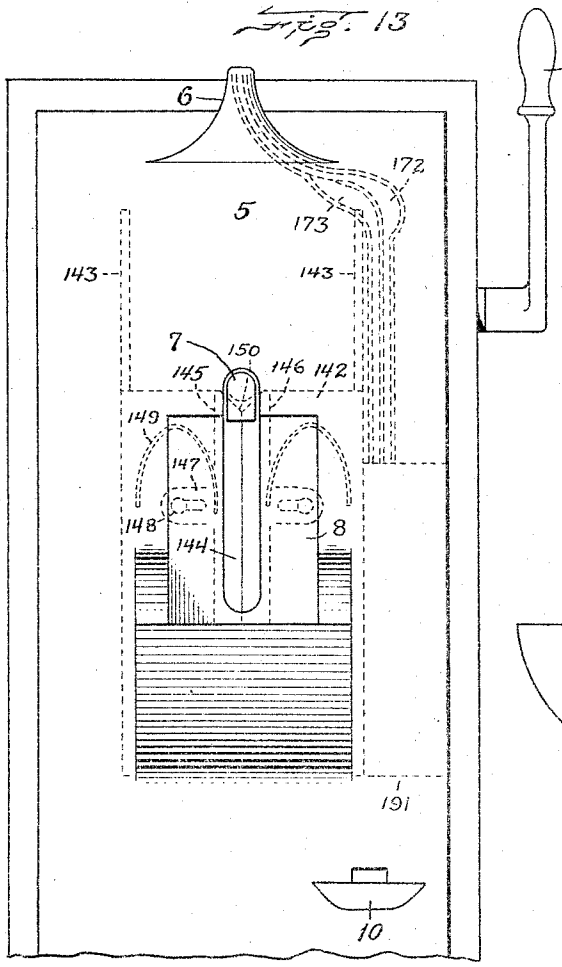

Fig. 15

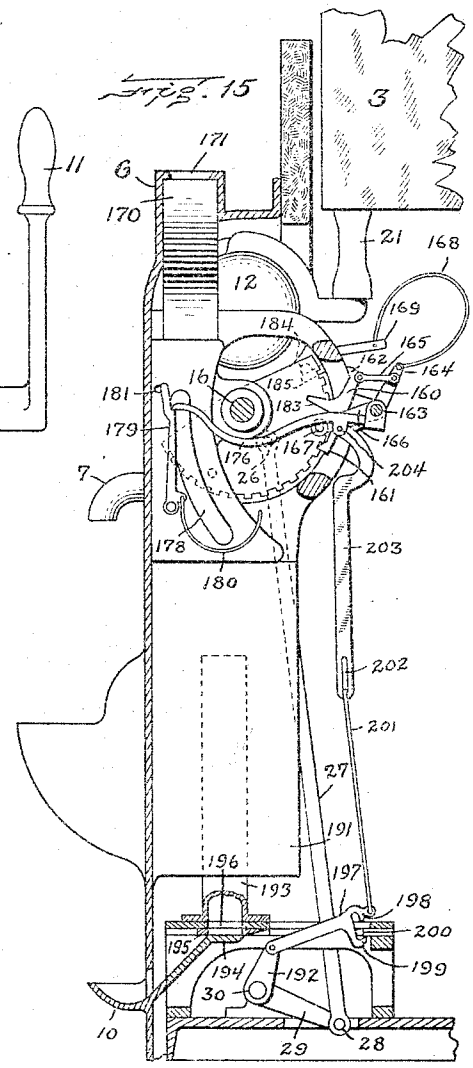

Witnesses:
W. P. Abell
F. R. Rowlstone

Inventor
Leslie D. Jannell
by Wright Brown Quinby May
Attorneys

L. D. JANNELL.

LIQUID AND CUP DISPENSING APPARATUS.

APPLICATION FILED DEC. 19, 1908.

1,035,348.

Patented Aug. 13, 1912.

5 SHEETS—SHEET 5.

Fig. 19

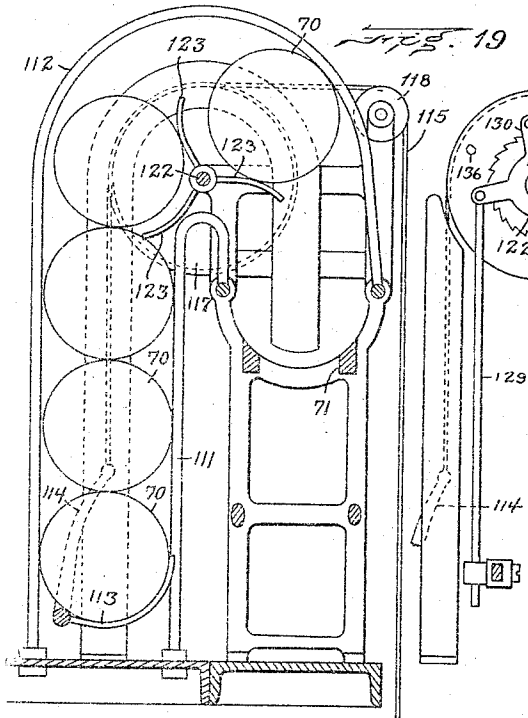

Fig. 20

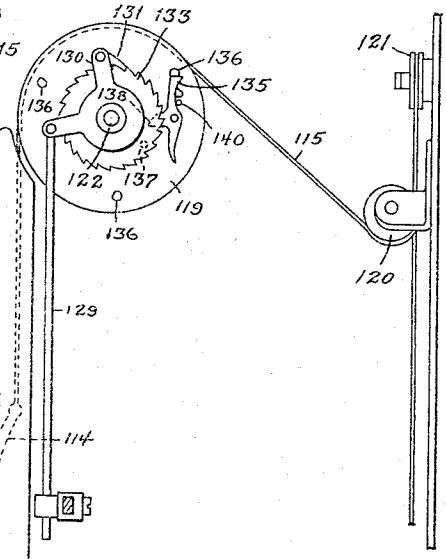

Fig. 17

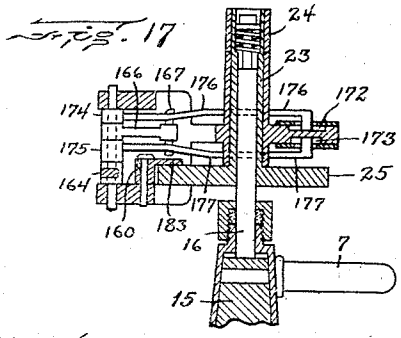

Fig. 18

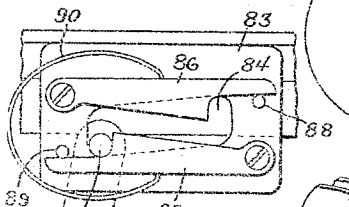

Fig. 21

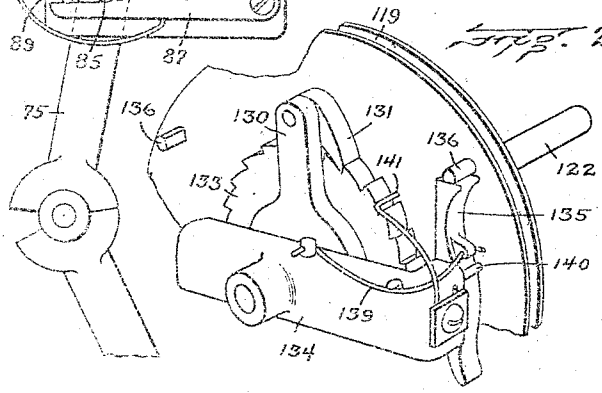

Fig. 16

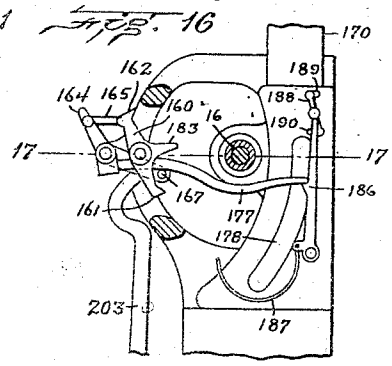

Witnesses:
W. P. Abell
F. R. Ronkstore.

Inventor
Leslie D. Jannell
by Wright Brown Quinby & May
Attorneys

UNITED STATES PATENT OFFICE.

LESLIE D. JANNELL, OF RUMFORD, MAINE, ASSIGNOR, BY MESNE ASSIGNMENTS, TO LAWRENCE W. LUELLEN, OF NEW YORK, N. Y.

LIQUID AND CUP DISPENSING APPARATUS.

1,035,348. Specification of Letters Patent. Patented Aug. 13, 1912.

Application filed December 19, 1908. Serial No. 468,393.

To all whom it may concern:

Be it known that I, LESLIE D. JANNELL, of Rumford, in the county of Oxford and State of Maine, have invented certain new and useful Improvements in Liquid and Cup Dispensing Apparatus, of which the following is a specification.

This invention relates to coin-controlled apparatus adapted to dispense liquid in measured quantities, and to provide a fresh cup before delivery of each quantity of the liquid.

This invention is particularly designed to provide specified quantities of a beverage and to provide an individual drinking cup for each user, which is furnished ready to the user before the liquid is supplied.

The main object of the invention is therefore to provide a dispensing apparatus of the character above defined, and a secondary object is to correlate the parts of the apparatus so that a single movement of a lever operated by the user of the machine after the coin or coins have been deposited will place a cup beneath the delivering spout, cause the liquid to be delivered, place a fresh cup in position to be fed at the next actuation of the apparatus, and deliver change to the user in cases where the coin dropped into the slot is of a higher denomination than the amount necessary to pay for the drink.

Further objects are the provision of new and improved means by which the foregoing objects may be accomplished, including a feeding device for the cups which will bring them one at a time from a horizontal series, and turn each cup into an upright position before the liquid is delivered into it, an improved coin-controlled apparatus adapted to be operated by different coins, and a change-delivering apparatus.

In the accompanying drawings I have illustrated a machine which embodies in the best form at present known to me the principles of my invention.

Figure 1 represents a perspective view of the machine. Fig. 2 represents a vertical longitudinal section of the apparatus which controls the dispensing of the liquid and the delivery of the cups. Fig. 3 represents a detail sectional view on line 3—3 of Fig. 2, being made on an enlarged scale. Fig. 4 represents a sectional view showing the cup-feeding apparatus in the position it occupies when a cup has been placed ready for use. Fig. 5 represents a detail sectional view illustrating the cup carrier and tilter. Fig. 6 represents a similar view showing the same, but while the cup is still in a horizontal position and before it has been tilted into upright position. Fig. 7 represents an elevation of the cup holder as viewed from in front and above the same, the line of sight being indicated by the arrow in Fig. 4. Fig. 8 represents a sectional elevation of the cup carrier. Fig. 9 represents a perspective view showing one of the guideways for the cup carrier and the dog which controls the position of the cup-holding jaws. Fig. 10 represents a perspective view of the said dog as viewed from a different angle. Figs. 11 and 12 represent fragmentary elevations illustrating the action of the locking dog in holding the cup-gripping jaws in different positions. Fig. 13 represents an elevation of the front plate of the casing which incloses the dispensing mechanism. Fig. 14 represents a perspective view of the device which feeds the cups forward. Fig. 15 represents a sectional elevation illustrating the coin-controlled mechanism which governs the dispensing apparatus. Fig. 16 represents a sectional elevation of the coin-controlled mechanism as seen from the side opposite to that illustrated in Fig. 15, showing the trips operated by a coin or coins of different denominations. Fig. 17 represents a horizontal sectional view on line 17—17 of Fig. 16. Fig. 18 represents an elevation of a part of the mechanism which feeds the cups forward. Fig. 19 represents a vertical cross section illustrating a part of the cup-supplying devices. Fig. 20 represents an elevation of a part of the same mechanism. Fig. 21 represents a perspective view of the devices which control the supply of cups.

The same reference characters indicate the same parts in all the figures.

Referring to the drawings and first to Fig. 1,—1 represents the box or casing in which the apparatus is inclosed, the same being supported upon a bench or table 2 or other suitable resting place. The casing 1 incloses the dispensing and coin-controlled apparatus as above stated, and supports also a tank 3 containing water or other liquid which is to be dispensed. This tank may, if desired, be a transparent one of glass, and may or may not be detachable from the

main casing. It is set somewhat within the open top of the casing and rests upon brackets 4 (Fig. 2) attached to the inner surfaces of the casing walls. I find it advisable under some circumstances to make the box or casing 1 of stone, and hence in the drawings the walls thereof are shown as consisting of stone slabs.

In the front wall is a metallic cover plate 5 having a bulging front, in the top of which is the casing 6 which incloses the entrance end of the coin-chute, and in the intermediate part of which are the delivery spout 7 through which the measured quantities of liquid are discharged, the opening 8 through which the drinking cups are presented, and the platform 9 on which the cups are supported while being filled. Near the bottom of the cover is a shelf 10 having a pocket into which is delivered accessibly to the user of the apparatus the change which is returned when a coin of value greater than enough to pay for the drink is deposited in the chute. At the side of the protuberant part of the cover plate is a crank 11 by which all the parts of the apparatus are simultaneously operated.

Referring now to Fig. 2, the measuring receptacle for the charges of liquid is represented by a chamber 12. This chamber receives its supply of liquid from the tank 3 by means of a conduit 13 which opens into a valve chamber 14. There is a valve 15 in the latter which is connected directly to the shank 16 upon which is mounted the crank handle 11 (see Fig. 17).

The valve has one passage (not shown) by which the liquid is allowed to run into the measuring chamber when the handle is in the position shown, and it has a second passage 17 at right angles to the first passage which is adapted to be brought into registry with an outlet port 18 from the measuring chamber, and with the delivering nozzle 7 when the handle is brought into a position at right angles to that shown. This movement of the valve shuts off the supply from the tank. In the measuring chamber is another passage 20 which connects by a piece of tubing 21 with a vent channel 22 which may be external pipe, or, as here shown, a separate passage formed integrally in one of the walls of the tank 3. It is illustrated by broken vertical lines in Fig. 1, and extends above the height of liquid in the tank 3. This passage forms a vent, allowing inflow of air into the measuring chamber when the contents thereof are drawn off, and permitting escape of the air therefrom when the chamber is filled.

The cups are fed and brought into position by the same movement of the handle which opens the delivery valve. Connected to the valve shank 16 and also to the handle 11 is a sleeve 23 (Fig. 17) rotatably held in a cylindrical bearing 24 which is secured to a part of the framing of the apparatus. This sleeve carries a toothed segment 25, shown also in Fig. 15. This disk has a crank pin 26 in one face to which is pivoted a link 27. The link extends downwardly and is connected by a pin 28 with an arm 29 on a horizontal rock-shaft 30 at the base of the machine, to which rock-shaft are connected the arms 31 which operate the cup-carrying slide and grippers, as well as other arms which will be later described. The cup carrier consists of a plate 33 having ribs 34 which slide in the horizontal guideways 35. There are two of these arranged in a horizontal plane, and each supported by two rigid arms 36 which rise divergently from a pedestal 37 and contain at their junction bearings for the rock-shaft 30. The plate 33 has two apertured lugs 38 between which is contained the hub 39 of a holder 40 which is curved so as partially to embrace the side of a cup. This holder swings about a pivot which consists of the bushings 41 and 42 which are held immovably in the ends of the hub 39 and project therefrom into the apertures of the lugs 38 of the sliding plate 33. These bushings are hollow to receive the shanks of dogs, which will be presently described. Projecting from the back of the holder 40 is a hook 43 which is adapted to enter a recess 44 in the slide 33 and to be there engaged by a latch 45 which retains the holder in a horizontal position flat against the top of the plate 33, this position being illustrated in Fig. 6. The latch is a plate which slides in a channel 46 in the slide 33 and has a depending lug 47 at its forward end. This lug is provided so that it may come against a stationary stop 48 when the slide 33 is at the forward limit of its travel, whereby the latch plate is retracted and the cup holder 40 left free to be tilted into upright position. The guideways 36 merge into a platform or shelf 49 which projects through the opening 8 of the cover plate 5, and the projection 48 extends from the rear side of this platform or shelf between the guideways.

At the sides of the cup-holder 40 are bearings which contain the trunnions 50 of the cup-clamping jaws 51. These jaws are curved so as to fit the outside of a cup, and have indenting points 52 which enable a positive grip on the cup to be had. Projecting laterally from the jaws between the trunnions are pins 53 connected by universal joints with the arms 31, each gripping jaw being thus connected with one of the arms. The universal joints consist of sleeves 54 rotatable on the ends of the arms 31 and having bearings 55 which receive pivot pins projecting from blocks 56 which are swiveled upon the pins 53. The arms 31 which

are oscillated by the rock-shaft 30 are the sole actuators for the cup carrier and act to move the sliding plate 33 back and forth, clamping and unclamping the jaws 51 and tilting the cup holder 40 from the horizontal to the vertical position and vice versa. These motions are all given by the arms on account of the fact that they are connected to the jaws of the cup holder at points eccentric both to the pivots of the jaws and the pivot of the cup holder.

A device is provided for holding the jaws apart when the carrier is moved rearward, and preventing them from swinging apart after they have been brought together to grasp a cup. There is one such device for each jaw, and it consists of a dog 57, the shank 58 of which is contained in one of the bushings 41 and 42. The shanks 58 are longer than the bushings and so permit the dogs to move outward. They are normally held outward by a spring 59 contained between their adjacent ends, which presses outwardly upon them. Each dog has two arms 60 and 61, the latter having a cam surface 62 and an intermediate projection 63 having a knife edge. The arm 60 of each dog carries a pin 64 which enters a socket in the side of the cup holder by which rotation of the dog relatively to the cup holder is prevented, but is caused to partake of the turning movements of the latter. Secured to the lower trunnions of each of the gripping jaws 51 is an arm 65 having a pointed end adapted to coöperate with the knife edge 63. When the arm is on one side, the jaws are held apart, and when it is on the other side they are held inward in gripping position. At the forward end of each guideway is a rigid cam projection 66 (see Fig. 2). The cam surfaces of these projections are inclined toward the inner sides of the guideways so that they will be engaged by the arms 60 of the dogs when the latter are tilted in the course of the motion of the cup holder which brings the same vertical. The inclination of the cam projections causes the dogs to be moved inward and the knife edges 63 to be retracted so that they interpose no obstacle to the movement of the arms 65. When the carrier is in this position, the cup is presented upright under the spout ready for use. In order to move the carrier back to get a fresh cup, the arms 31 are swung backward. This movement first draws the gripping jaws apart to release the cup before any movement is given to the carrier as a whole. As soon, however, as the cup holder is tilted backward, the dogs are disengaged from the cam and allowed to spring outward where they engage the arms 65 in the manner shown in Fig. 12, and positively hold the jaws separated. At the rearward limit of the cup carrier, a pin 67 is set into each of the guideways, as shown in Figs. 4 and 9. These pins are engaged by the cam surfaces 62 of the dogs and act to move the latter inward when the carrier reaches its rearward limit. The slide plate and holder 40 are then under the forward cup of a nested series, as shown in Fig. 2, and the jaws 51 embrace the cup. When the actuating arms are next moved forwardly, the jaws being then released from the locking dogs, said jaws are first closed into tight engagement with the endmost cup before any movement is given to the carrier as a whole. As soon as the carrier itself moves, the locking dogs spring outward and secure the jaws in their gripping position, from which they are not released until the dogs strike the cams 66 at their limit of motion. The carrier is brought forward until the lug 47 of the latch plate strikes the projection 48, whereupon the latch is retracted and the slide 33 stopped. Further movement of the driving arms then acts to swing the holder 40 about its horizontal pivot and right the cup. At the same time that the slide is brought to rest, a stop latch 68, pivoted beneath the guideways, is swung up by a spring 69 into the opening 44 in the bottom of the plate. This latch prevents rearward movement of the slide until the holder 40 has been tilted back against the slide. In so tilting the hook 43 of the holder presses on the head of the latch 68 and releases it. It is only when the hook is far enough in the holder to be engaged by the latch plate 45 that the stop 68 is disengaged. This latch 68 is so arranged that the forward end of the slide plate depresses it in going forward, as illustrated in Fig. 6, so that the plate 33 slides over the stop until the latter is ready to enter the opening 44.

A drinking cup is indicated by the numeral 70. They are supplied to the machine in bunches of a convenient number, for instance twenty-four. The cups of each set are nested together as shown at 70^a, and lie horizontally between guide rails 71. The forward cup of the series is brought against a gage 72 in position to be engaged by the cup carrier, by a feed frame 73 which is shown most clearly in Fig. 14. This frame consists of two longitudinal bars connected together by cross bars 74. The longitudinal bars are toothed and fit within the rails 71. They are normally slightly depressed so that the rails ordinarily support the cups, but the feed bars are given a motion upward and then forward, so as to lift the cups from the rails and advance them. After advancing the cups a specified distance the feed frame is depressed, and then moved rearwardly. The means for thus moving the feed frame consists of two toggle joints 75 connected together by a link 76, and actuated by a swinging arm (not shown) on the

rock-shaft 30 between the supports for the carrier guide, which arm is pivoted to a sleeve 77 (Fig. 2) which slides upon a link 78 and alternately engages stops 79 and 80 secured to said link. This link or rod 78 is pivoted to a lever 81 and connected by an intermediate link 82 with one toggle joint. When the links are forced backward, as they are when the cup carrier is retracted to grasp a new cup, the toggles are broken and the cups rest stationarily on the side rails 71, but when the cup carrier is advanced, the toggles are straightened, and the whole series of cups fed forward by a distance sufficient to present a cup where it may be grasped by the carrier on its next trip.

The feeding frame is governed so that it makes four distinct movements, first upward, then forward, then downward, and then rearward. This is so that it may impart the full extent of its movement to the cups when moving forward and will not retract them at all in moving backward. The means for so controlling the movement of the feed frame is shown in Fig. 18, and consists of a plate 83 fixed to the outside of one of the rails 71. This plate has a slot 84 through which projects the end 85 of one of the cross-bars 74 of the feed frame. Above and below the slot 84 are latches 86 and 87 which are pivoted to the plate 83 respectively at opposite ends thereof. These latches have abrupt shoulders overlapping the edges of the slot, the shoulder of the upper latch depending from the upper right-hand end of the slot, and the shoulder of the other latch rising at the lower left-hand end thereof. The latches are held against stop pins 88 and 89 by a spring 90. From Fig. 18 it will be understood that the feed frame cannot be moved forward until the toggle has been straightened and the pin 85 lifted above the latch 87. The straightening of the toggles gives sufficient movement to the feed frame to cause the latter to lift the cups. The further movement of the actuating links toward the front of the machine then carries the feed frame forward, the latch 86 being lifted by the pin 85. When the pin reaches the end of the slot, the upper latch drops so that its locking shoulder prevents return of the pin 85 until the latter has been lowered below the shoulder. This causes the initial rearward movement of the links to break the toggles and lower the frame until the cups rest on the stationary frame, when the frame may be moved backward without disarranging the cups. To each of the feeding bars 73 is pivoted a pointed feed lever 91, the object of which is to engage the rim of the foremost cup and push the same forward positively. Each of these levers is hung from a stud 92 projecting from the bar 73, while the other end of the lever is carried under the bar and outside of the adjacent rail 71, having a pin 93 entering a slot 94 of a plate 95 fixed to the outer side of the rail (see Figs. 2 and 4). As the plate 95 is stationary, the pin 93 is prevented from rising when the feed frame rises. Consequently the pin 92 acting on the feed lever between its ends causes the pointed forward end to rise farther than the feed bars, and so such pointed end is lifted high enough to engage the rim of the cup. When the cups are prepared for use in the machine, they are nested together as shown, and as they are all of the same size, each projects by about the same amount from the preceding cup. The movement of the feed frame is, however, greater than the spacing of the cups, so that placing of the forward cup against the gage 72 is always assured. The excess movement of the feed is permitted by the fact that the bars 73 engage the cups only frictionally, and that the pointed feed levers 91 are yielding. They have slots which permit them to slide on the studs 92, as shown clearly in Fig. 14, and are permitted to yield by the springs 96 which normally hold them projected forward.

The gage 72 consists of a rod of which the forward end is bent so as to extend across the end of the foremost cup. This rod is lifted out of the way of the cup before the latter is engaged by the carrier. The lever arm 81 connected to the actuating arm or rod 78 serves to thus move the gage through the medium of a rock-shaft 97, short arm 98, link 99, and arm 100, which is connected to the gage rod. At the time when the feed frame is retracted, the foremost cup of the series is elevated so that the carrier may move under it, by fingers 101 which are connected by a cross piece 102. The latter has projecting ends which enter a slot 103 in lugs 104 depending from the forward ends of the feed frame bars 73. The rear ends of the fingers are connected by a pin 103^a, the ends of which enter the grooves of the guideways 35. When the feed frame is raised, it lifts the forward ends of the fingers 101, because their rear ends are restrained by the pin 103^a, and thus the forward cup is held elevated, so that the carrier can pass under it. It remains in this elevated position until the carrier has grasped it, because the toggles are not broken and the feed frame is not lowered until the sleeve 77 hits the stop 80, which occurs when the cup carrier is near its rearmost location. At this time the cup in rear of the foremost one is clamped and prevented from being carried forward by its adhesion with the foremost cup, by clamps 105 which have arms 106 connected by universal couplings 107 with arms 108 on the rock-shaft 97. The couplings 107 and arm 108 constitute toggle joints which

are brought into line when the actuating rod is moved to the rear at the end of the rear travel of the carriage. The clamps 105 are then firmly engaged with the second cup of the series. Another pair of separating jaws or fingers 109 is at the same time brought against the second cup directly in rear of the rim of the foremost cup. These jaws are pivoted upon studs 109ª and are pressed by springs 110 so as to engage the cups. Cam projections 110ª are formed upon the jaws and overlie the feeding bars 73. When the bars come forward to feed the series of cups, they rise under the fingers 110ª and move the jaws 109 away from the cups, but when they are again lowered, the springs 110 return the jaws and press them against the opposite sides of the cup.

When any one series of cups is exhausted, a new set is supplied to take its place. In this machine I provide for supplying several nested series of cups. Looking at Fig. 19, it will be seen that there are two sets of rods 111 and 112 which rise from a position below and beside the mechanism previously described and curve over the rails which support the operative series of cups. These reserve series are supported by an elevator 113 having arms 114 at each end to which arms are connected cords 115 passing over pulleys and having attached weights 116. The cord at the rear of the machine passes over the pulleys 117 and 118 while a cord at the forward end of the machine passes over a pulley 119 under a guide pulley 120 and over a second guide pulley 121, these pulleys being provided to lead the cord and bring the weight out of the way of the coin-governed tripping mechanism. The pulleys 117 and 119 are mounted on a shaft 122 which also carries spiders 123 having arms which serve to engage the groups of cups and carry them over so that they will fall upon the guides 71. These spiders are actuated whenever one group of cups becomes exhausted, by means of an arm 124 on the rock-shaft 30. This arm carries a pin 125 which projects into a slotted link 126, the slot thereof being illustrated at 127. This link is connected to a bell-crank lever 128, one arm of which is pivoted to a rod 129 at 129ª (see Fig. 2). This rod is connected at its upper end to a pawl carrier 130 pivoted upon the shaft 122, which carries a pawl 131 engaging the teeth of a ratchet wheel 133 loose on the shaft. The last-named parts are most clearly illustrated in Fig. 21. Pivoted to the end of the bracket 134 which provides the bearing for the shaft 122 is a stop 135. Projecting from the side of the pulley 119 are pins 136 equal in number to the arms of the spider. The end of the stop 135 is located so that the pins abut squarely against it and prevent rotation of the shaft as long as the stop is in the way. There is a pin 137 (Fig. 20) on the ratchet wheel 133, and this pin once in each revolution of the ratchet wheel is adapted to engage a cam projection 138 on the stop and swing it out of the path of the pins 136. A spring 139 normally holds the stop against an abutment 140 so that its end is in the path of the pins 136. The ratchet wheel 133 has a number of teeth equal to the number of cups in any one series, and the pawl carrier is operated at each travel of the cup carrier so as to move the ratchet by the space of one tooth. Consequently the ratchet is given a complete rotation while one set of cups is being used, and brings the pin 137 into position to trip the stop 135 as soon as the last cup of the series is taken out. This releases the pulley 119 and shaft 122, allowing the latter to be turned by the weights 116, causing the elevator 113 to be raised, and another series of cups to be deposited on the rails 71. As soon as the pin 137 has displaced the stop 135, it passes by the same, allowing the stop to swing back into its normal position, where it will stop the next pin 136 and arrest further feed of cups until the fresh series has been used up. A spring 141 prevents backward movement of the ratchet 133.

The arm 124 which operates the ratchet and pawl mechanism has another function, that of opening the gate in the front wall of the apparatus. In the rear of the opening 8, which is in the cover plate 5, there is a vertically sliding gate, shown by dotted lines in Fig. 13 and represented by 142. This gate slides in vertical guideways 143 which are affixed to the rear surface of the cover 5. The gate 142 is normally closed but is raised to permit ejection of a cup. This gate has a longitudinal slot 144 to accommodate the spout 19 when the gate is raised, and back of the slot are sliding cover plates 145 and 146. These plates have lugs 147 which are connected by pins 148 passing through slots in the lugs to the rear side of the gate 142 and are normally held by springs 149 so that their adjacent edges abut. They are beveled off at their upper ends, as shown at 150, to make a V-shaped notch through which the spout passes. These beveled edges cause the cover plates to be retracted when they come into contact with the spout, thus uncovering the slot 144 and allowing the gate to be raised. The connection for raising the gate consists of a link 151 (Fig. 2) pivoted at 152 to a lug on the rear of the gate and connected with a lever 153 which is pivoted to a bracket 154. Pin 125 passes through a crooked cam slot 155 on lever 153. The shape of this slot is such that the forward movement of the arm 124, occurring when the cup carrier is moved forward, lifts the gate quickly and then holds it stationary while the cup is carried through the opening

and fed. A weight 156 is secured to the lever 153 and balances the gate and the attached link.

The lever 11 by which the mechanisms are operated is normally held locked until a coin is deposited in the slot. The coin-controlled mechanism is illustrated in Figs. 15, 16 and 17. The toothed segment 25 before mentioned, which is secured to the shank which carries the handle 11, is locked by a double pawl 160 which has two toes 161 and 162. The teeth of the segment 25 are square so that either one of these toes will serve to lock the segment against rotation in one direction only, but will permit its rotation in the opposite direction. Thus when the pawl is in the position shown in Fig. 15, rotation of the pawl and handle anti-clockwise, which is the way that the handle is turned to operate the mechanism, is prevented. Referring particularly to Fig. 15, it will be seen that there is a rock-shaft 163 which is pivoted upon cones held in fixed brackets in the rear of the pawl 160. To this rock-shaft is secured firmly an arm 164 connected by a link 165 with the pawl, and a second arm 166 is also rigidly secured to the rock-shaft and has pins 167 extending under the trip levers hereinafter described. A spring 168 is connected to the end of the arm 164 and its other end is attached to a rigid abutment 169. The location of the point of attachment of the spring 168 to the abutment 169 is such relatively to the rock-shaft 163 and the end of the lever 164 that when the pawl toe 161 is engaged with the segment 25, the spring exerts its pressure on the arm 164 toward the right and tends to hold this toe thus in engagement. When, however, the toe 162 is moved into engagement with the segment, the lever 164 is shifted to the left of a straight line joining the rock-shaft 163 and the point at which the spring is fixed to the abutment. Hence the line of pressure of the spring is transferred to the left of the rock-shaft and the spring tends then to hold the toe 162 against the segment. Thus the same spring makes either pawl element operative.

A coin chute is represented at 170. The end of this chute extends up into the housing 6 and has a slot registering with an external orifice 171 of the latter. Inside of the slot the coin chute branches into two separate channels 172 and 173 (see Fig. 17) on each side of a partition wall. The passage 173 is of less width than the other, and so is adapted to receive smaller coins. The portions of the passages represented in Fig. 17 are vertical, but before reaching this vertical portion they travel on a curve from the orifice, the curved portion of the chute being represented by shading in Fig. 15. The smaller channel in this curved part is beneath the larger channel and merges gradually into it so that the smaller coins will drop out and fall into the passage 173, while the larger ones will be carried on into the passage 172. The present machine is proportioned so that the smaller channel will take copper cents and the larger one will take nickel five-cent pieces.

Loosely mounted upon the rock-shaft 163 are sleeves 174 and 175 to which are connected respectively the trip levers 176 and 177. The former of these has an offset end extending through a curved slot 178 into the channel 172 for the five-cent piece, while the latter has a similar end extending into the channel 173, as illustrated in Fig. 17. The slots are curved concentrically about the rock-shaft 163 and are of sufficient extent to permit the trip levers to shift the pawl 160, as will be presently described. A latch 179 is held by a spring 180 so that its locking shoulder lies under the end of the trip lever and holds it elevated. The bent end of the latch extends through an opening 181 into the coin chute so that the coin will deflect it far enough to release the trip. After thus deflecting and displacing the latch, the coin rests against the offset end of the trip lever and by its weight depresses it. In being depressed the lever bears against the pin 167 on arm 166 and turns the rock-shaft, thereby shifting the lever 164 and pawl 160 so that the toe 162 of the latter, instead of the toe 161, is engaged with the toothed segment. The formation of the toe is such that it will permit rotation of the segment and handle in a direction necessary to operate the machine, but will not permit return of the handle until the same has been completely operated. By the time the handle has been turned far enough to open the valve of the measuring chamber, which is about a quarter of a rotation, a pin 182 (Fig. 15) on the disk 25, strikes an arm 183 projecting from the pawl 160 and shifts the latter so that the toe 161 comes against the periphery of the segment. Further movement of the handle in this direction is then prevented, but it is permitted to be returned, and when it has been restored to its previous position, a pin 184 coming against a fixed stop 185 prevents further movement. The handle is thus locked by the pawl 161 and the pin 164 against movement in either direction until another coin is deposited and the trip lever again released. It should be noted that the pawl in being returned to this position, swings the lever 164 outward, thereby lifting the arm 166 and through the pin 167 elevating the trip lever 176 until it is engaged and held by the latch 179, the latter being automatically operative by the spring 180. The other trip lever 177 which is operated by coins of another denomination, is identical with trip lever 176, and operates the pawl

in precisely the same manner. It is retained in the elevated position ready for operation by a latch 186 controlled by a spring 187. This latch is not directly engaged by a coin, but is indirectly operated through a two-armed lever 188 in order that it may not release the trip until more than one coin has been deposited. The lever 188 is pivoted centrally to the upper end of the latch and has studs projecting from its two ends into the coin passage 173 through the slots 189 and 190. The first coin that drops through the chute strikes the upper stud and oscillates the lever to the right, as seen in Fig. 16, and then striking the lower stud, oscillates it oppositely and finally falls upon the offset end of the trip lever. As the coin acts on opposite ends of the lever 188 in succession, it simply swings it back and forth idly without moving the latch. The present apparatus is constructed so that it will not operate until three coins have been deposited. Consequently the second coin oscillates the lever back and forth in the same manner. This second coin, however, rests on the edge of the first coin and lies between the lower end of lever 188 and the opposite side of the chute, thus acting as a fulcrum for this lever. The third coin then employed strikes the stud of the upper end of lever 188 and as the lower end of this lever is prevented from movement by the coin against which it abuts, the latch 186 is displaced and the trip lever 177 lowered under the weight of the three coins. When in its lowermost position, the trip allows the coins to slip off its end and fall from the slot into a box 191. The same is true of the other trip lever 176.

As previously stated, the price of the drink delivered by this apparatus is three cents, and may be paid for either by the deposit of three pennies or of a five-cent piece. When the latter coin is used, change must be returned to the user. The return of the change is effected by an arm 192 (Fig. 15) on the main rock-shaft 30. The money for the change is arranged in a vertical column in a tube 193, and rests upon a stationary support 194. Traveling over the support and in contact therewith is a slide 195 which has an orifice 196 through it and is as thick as the number of coins which must be delivered to make the change, in this case two pennies. Whenever the machine is operated subsequently to the deposit of a five-cent piece, the slide is moved forward and two pennies are delivered into the change pocket 10. When the apparatus, however, is operated by depositing pennies, no change is delivered and the slide 195 is not operated.

The means for operating the slide is under the control of the five-cent trip lever 176 and consists of a connecting rod 197 having two jaws or hooks 198 and 199 separated by a space and adapted to engage a pin 200 affixed to the slide 195. A rod 201 is connected to the end of the connecting rod and is hooked into a slot 202 in the end of a link 203 which is hung from a pivot 204 on the trip lever 176. When this lever is held up by the latch 179, it holds the connecting rod 197 so that the slot in the end of the latter is opposite the pin 200 and the connecting rod therefore may be moved back and forth by the arm 192 when the rock-shaft 30 is oscillated without moving the slide 193. When a five-cent piece is deposited, however, and the trip lever 176 is depressed, the connecting rod is allowed to drop so that its hook 198 engages over the pin 200. Thereupon oscillation of the arm 192 causes the slide to be moved forward and the coins delivered. The slot 202 provides the lost motion necessary to permit full swing of the trip lever 176 after the hook of the connecting rod 197 has been engaged with the trip.

I claim:—

1. In a liquid and cup dispensing apparatus, the combination of means for holding a supply of cups, a liquid-measuring chamber having a discharge spout, an actuator for opening said chamber to cause discharge of the liquid, and mechanism operated by said actuator having means for grasping and removing a single cup from the supply and putting it in an upright position beneath said discharge spout.

2. An apparatus of the character described, comprising in combination means for holding a reserve supply of cups in a horizontal nested series, a liquid container, an outlet valve therefor, a manual actuator for opening said valve, and mechanism operated by said actuator for removing a cup from the supply and turning it to an upright position to receive the liquid.

3. An apparatus of the character described, comprising, in combination, means for holding a supply of cups lying on their sides, a liquid container having an outlet spout, a carrier mounted with capability of traveling back and forth between said cup supply and spout, and means for causing said carrier to take cups one at a time from the supply and place them in upright position beneath said spout.

4. A liquid and cup dispensing apparatus comprising in combination means for holding a supply of cups, a liquid measuring device having an outlet spout, a traveling cup conveyer arranged to travel back and forth from said cup supply to said spout and to take cups from the supply and present them beneath said spout, and a single actuator operated manually for operating said cup carrier and causing discharge of the liquid, in one operation.

5. In an apparatus of the character described, the combination of supporting

means for holding a supply of cups, a liquid measuring chamber, a spout leading therefrom and having an accessible outlet, a valve operable to permit discharge of the liquid from said chamber through said spout, a carrier movable toward and from said cup supply for taking cups singly from the supply and placing them in upright position under the spout, and means independent of said carrier for feeding the supply of cups toward said carrier to present a fresh cup to said carrier after each actuation thereof.

6. In an apparatus of the character described, the combination of supporting means for holding a supply of cups, a liquid measuring chamber, a spout leading therefrom and having an accessible outlet, a valve operable to permit discharge of the liquid from said chamber through said spout, a carrier for taking cups singly from the supply and placing them in upright position under the spout, means for feeding the supply of cups toward said carrier to present a fresh cup to said carrier after each actuation thereof, and a single manually-operated actuator for operating said valve, cup carrier, and feeding means in a single operation.

7. A liquid and cup dispensing apparatus, comprising a cup container by which cups are supported, a liquid delivering spout, a traveling cup conveyer arranged to move from said cup container to a position beneath said spout and being provided with means for grasping a cup, and means for so moving said conveyer, whereby cups are removed from the container and placed under the spout.

8. A liquid and cup dispensing apparatus, comprising a cup container by which cups lying on their sides are supported, a liquid delivering spout, a traveling cup conveyer arranged to move from said cup container to a position beneath said spout, a tilting cup holder constituting part of said conveyer, and means for moving the conveyer from said cup container to a position beneath said spout and tilting said holder, whereby cups are removed singly from the container and placed in upright position beneath the spout.

9. A liquid and cup dispensing apparatus, comprising in combination, a reservoir, a measuring chamber connected therewith and having an outlet, a valve in said outlet, a discharge spout extending to a point outside of the apparatus, means for supporting a horizontal line of cups nested together with the axis thereof horizontal, means for feeding the line of cups toward the front of the machine, a gage for limiting such movement, a reciprocating cup carrier arranged to travel from a point beneath the discharge spout to a position adjacent to the foremost of the line of cups, a tilting cup holder pivotally mounted on said carrier, and means for reciprocating the carrier, said means being organized to tilt the cup into an upright position when it is placed beneath the spout.

10. In an apparatus of the character described, a cup conveyer consisting of a reciprocating slide, a cup carrier pivoted thereon and adapted to swing about its pivot from a horizontal to a vertical position, cup-gripping jaws pivoted to said holder, and actuating arms for the carrier, said arms being flexibly connected to said jaws at points eccentric both to the pivots of the jaws and the pivot of the carrier, whereby force applied by said arms will cause movement of the carrier as a whole and relative movement of the cup holder to the carrier and of the jaws to the holder.

11. In an apparatus of the character described, a conveyer consisting of a slide guided to travel in a fixed path, a cup holder pivoted to said slide on a horizontal pivot extending transversely of the movement of the carrier, cup-gripping jaws pivoted to said holder on axes perpendicular to the first-named axis and inclined in the direction of motion of the carrier, and actuating arms having a universal connection with said gripping jaws eccentric to both axes.

12. In a machine of the character described, a cup carrier consisting of a slide guided to travel in a fixed horizontal path, a cup holder shaped so as partially to embrace a cup pivoted to said slide in such a manner that it may lie flat against the slide and be moved into a position perpendicular thereto, cup-gripping jaws pivoted to said holder on inclined axes adapted to embrace and grasp the cup and movable with the carrier from a vertical to a horizontal position and vice versa, arms projecting laterally from said grippers, and operating arms flexibly connected with said gripper arms, the connection permitting said operating arms to move the grippers toward and from one another and to swing the holder about its pivot when the slide is held fast.

13. In a machine of the character described, a cup-carrying slide, a cup holder pivoted thereto, grippers pivoted to said holder, arms extending outwardly from said grippers, and an operating lever connected to each of said arms, said operating levers constituting the means for moving the carrying slide and their connection with the jaws being such as to move the latter together and apart and to cause tilting of the cup holder when further movement of the jaws is prevented.

14. In a machine of the character described, a cup-carrying slide, a cup holder pivoted thereto, grippers pivoted to said holder, arms extending outwardly from said grippers, an operating lever connected to

each of said arms, said operating levers constituting the means for moving the carrying slide and their connection with the jaws being such as to move the latter together and apart and to cause tilting of the cup holder when further movement of the jaws is prevented, and locking dogs movably carried by said cup holder adapted to lock the jaws either in their separated position, or in their gripping position, whereby the actuating levers are enabled to tilt the holder and move the slide without affecting the relative position of the jaws.

15. An apparatus of the character described comprising a liquid reservoir, a measuring chamber having an outlet, a valve in said outlet, means for holding a supply of cups with their axes horizontal, a horizontal guideway extending from beneath the foremost of said cups to a location under said discharge outlet, a cup carrier consisting of a slide constrained to travel on said guideway, a tilting cup holder pivoted to said slide and gripping jaws pivoted to said holder, operating levers connected with said jaws eccentrically of their pivots and of the pivot of said holder, a single actuator connected to oscillate said levers and open and close the said valve, and a stop located at the forward limit of travel of said cup carrier adapted to arrest the movement of the slide and permit continued travel of said levers to tilt the cup carrier and thereby bring the cup into an upright position.

16. An apparatus of the character described comprising a liquid reservoir, a measuring chamber having an outlet, a valve in said outlet, means for holding a supply of cups with their axes horizontal, a horizontal guideway extending from beneath the foremost of said cups to a location under said discharge outlet, a cup carrier consisting of a slide constrained to travel on said guideway, a tilting cup holder pivoted to said slide and gripping jaws pivoted to said holder, said cup holder having a locking hook and a latch mounted on said slide normally engaging said hook and holding the cup carrier against the slide, operating levers connected with said jaws eccentrically of their pivots and of the pivot of said holder, a single actuator connected to oscillate said levers and open and close the said valve, and a stop located at the forward limit of travel of said cup carrier adapted to arrest the movement of the slide and located so as to disengage the latch from the hook of the cup holder and permit continued travel of said levers to tilt the cup carrier and thereby bring the cup into an upright position.

17. An apparatus of the character described comprising a liquid reservoir, a measuring chamber having an outlet, a valve in said outlet, means for holding a supply of cups with their axes horizontal, a horizontal guideway extending from beneath the foremost of said cups to a location under said discharge outlet, a cup carrier consisting of a slide constrained to travel on said guideway, a tilting cup holder pivoted to said slide and gripping jaws pivoted to said holder, said jaws being movable toward and from one another, a locking arm carried by each jaw, a plurality of stops movably mounted on said cup holder and adapted to engage either side of said locking arm, whereby to hold the jaws either in the gripping position or separated from one another, actuating levers for said cup carrier connected therewith so as to apply their force to the grippers eccentrically of the pivots thereof, whereby to actuate the grippers and tilt the cup holder as well as to reciprocate the carrier as a whole, and cam abutments at each limit of travel of the carrier arranged to engage said locking dogs and actuate them to release the jaws, whereby they may be separated at the cup-delivering position and may be clamped together upon a cup at the cup-receiving position.

18. In an apparatus of the character described, a support for a supply of cups consisting of separated bars, and means for feeding said cups comprising feed bars and means for giving said feed bars an upward motion to raise the cups from the supporting bars, a forward movement to feed the cups forward, a downward movement to release the cups, and a rearward movement, in combination with a liquid reservoir having a discharge outlet, and conveying means for taking the foremost cup from such supply and placing it beneath said outlet.

19. In an apparatus of the character described, a support for cups adapted to hold a series of cups in line, a feed element therefor, and means for raising said element to engage the cups and for moving said element forward to feed the cups, in combination with a liquid reservoir having a discharge outlet, and conveying means for taking the foremost cup from such supply and placing it beneath said outlet.

20. In an apparatus of the character described, a support for cups adapted to hold a series of cups in line, a feed element therefor, and means for raising said element to engage the cups and for moving said element forward to feed the cups, said means consisting of toggle joints connected to said feeding element and to a fixed abutment, and an endwise movable link engaged with the knuckles of said toggle joints for straightening them and swinging them about their stationary pivots, in combination with a liquid reservoir having a discharge outlet, and conveying means for taking the foremost cup from such supply and placing it beneath said outlet.

21. In an apparatus of the character described, horizontal bars adapted to support a line of cups nested together in a horizontal position, connected feed bars arranged parallel with said supporting bars and normally below the supporting portions of the same, links depending from said feed bars, coöperating links pivoted to the lower ends of the first links and engaged at their lower ends with fixed pivots, each pair of links constituting a toggle joint, an actuator connected with the knuckles of said toggle joints and movable horizontally, and means for preventing forward movement of the feed bars until the toggles have been straightened, and for preventing rearward movement thereof until the toggles have been broken, in combination with a liquid reservoir having a discharge outlet, and conveying means for taking the foremost cup from such supply and placing it beneath said outlet.

22. In an apparatus of the character described horizontal bars adapted to support a line of cups nested together in a horizontal position, connected feed bars arranged parallel with said supporting bars and normally below the supporting portions of the same, links depending from said feed bars, cooperating links pivoted to the lower ends of the first links and engaged at their lower ends with fixed pivots, each pair of links constituting a toggle joint, an actuator connected with the knuckles of said toggle joints and movable horizontally, and means for holding said bars against forward movement when the toggles are being straightened, whereby the feed bars are caused to engage the cups and support the weight thereof before moving forwardly, in combination with a liquid reservoir having a discharge outlet, and conveying means for taking the foremost cup from such supply and placing it beneath said outlet.

23. In an apparatus of the character described, horizontal bars adapted to support a line of cups nested together in a horizontal position, connected feed bars arranged parallel with said supporting bars and normally below the supporting portions of the same, links depending from said feed bars, coöperating links pivoted to the lower ends of the first links and engaged at their lower ends with fixed pivots, each pair of links constituting a toggle joint, an actuator connected with the knuckles of said toggle joints and movable horizontally, and a latch having a shoulder arranged to prevent forward movement of the feed bars while the toggles are being straightened until the said feed bars have risen sufficiently to engage the cups, said latch then permitting the feed bars to travel forward and to carry the cups with them, in combination with a liquid reservoir having a discharge outlet, and conveying means for taking the foremost cup from such supply and placing it beneath said outlet.

24. In an apparatus of the character described, horizontal bars adapted to support a line of cups nested together in a horizontal position, connected feed bars arranged parallel with said supporting bars and normally below the supporting portions of the same, links depending from said feed bars, coöperating links pivoted to the lower ends of the first links and engaged at their lower ends with fixed pivots, each pair of links constituting a toggle joint, an actuator connected with the knuckles of said toggle joints and movable horizontally, a latch having a shoulder arranged to prevent forward movement of the feed bars while the toggles are being straightened until the said feed bars have risen sufficiently to engage the cups, said latch then permitting the feed bars to travel forward and to carry the cups with them, and a second latch arranged to prevent return movement of the feed bars before the toggles have been broken and the bars lowered out of contact with the cups, in combination with a liquid reservoir having a discharge outlet, and conveying means for taking the foremost cup from such supply and placing it beneath said outlet.

25. In an apparatus of the character described, horizontal bars adapted to support a line of cups nested together in a horizontal position, connected feed bars arranged parallel with said supporting bars and normally below the supporting portions of the same, links depending from said feed bars, cooperating, links pivoted to the lower ends of the first links and engaged at their lower ends with fixed pivots, each pair of links constituting a toggle joint, an actuator connected with the knuckles of said toggle joints and movable horizontally, a latch having a shoulder arranged to prevent forward movement of the feed bars while the toggles are being straightened until the said feed bars have risen sufficiently to engage the cups, said latch then permitting the feed bars to travel forward and to carry the cups with them, and a second latch arranged to prevent return movement of the feed bars before the toggles have been broken and the bars lowered out of contact with the cups, the first named latch being displaceable to permit return movement of the feed bars in a path continuously below the tangent line of the cups, in combination with a liquid reservoir having a discharge outlet, and conveying means for taking the foremost cup from such supply and placing it beneath said outlet.

26. In an apparatus of the character described, horizontal bars adapted to support a line of cups nested together in a horizontal position, connected feed bars arranged parallel with said supporting bars and normally

below the supporting portions of the same, links depending from said feed bars, co-operating links pivoted to the lower ends of the first links and engaged at their lower ends with fixed pivots, each pair of links constituting a toggle joint, an actuator connected with the knuckles of said toggle joints and movable horizontally, a latch having a shoulder arranged to prevent forward movement of the feed bars while the toggles are being straightened until the said feed bars have risen sufficiently to engage the cups, said latch then permitting the feed bars to travel forward and to carry the cups with them, and a second latch arranged to prevent return movement of the feed bars before the toggles have been broken and the bars lowered out of contact with the cups, both of said latches having abrupt shoulders and inclined approaches thereto, whereby to permit displacement thereof during the movement of the locking projection toward either abutment, in combination with a liquid reservoir having a discharge outlet, and conveying means for taking the foremost cup from such supply and placing it beneath said outlet.

27. In an apparatus of the character described, the combination of a support for a series of cups nested together, means for feeding said cups forwardly, a gage against which the end of the forward cup is placed by said feeding means, a liquid container having an outlet a traveling cup conveyer having gripping means adapted to grasp the foremost cup, and arranged to carry such cup into position beneath said outlet where it may receive liquid issuing therefrom, and means for grasping the second cup, to prevent displacement of any cups other than that grasped by the conveyer.

28. In an apparatus of the character described, means for supporting and feeding a series of cups nested together with each subsequent cup projecting from the rim of the preceding one, a liquid container having an outlet a traveling cup conveyer having gripping means adapted to grasp and remove the foremost cup, and arranged to carry such cup into position beneath said outlet where it may receive liquid issuing therefrom, and means operated prior to the removal of the foremost cup for gripping the second cup and holding the same and succeeding cups stationary while the foremost cup is removed.

29. In an apparatus of the character described, means for supporting and feeding a series of cups nested together with each subsequent cup projecting from the rim of the preceding one, a liquid container having an outlet a traveling cup conveyer having gripping means adapted to grasp and remove the foremost cup, and arranged to carry such cup into position beneath said outlet where it may receive liquid issuing therefrom, grippers arranged beside that portion of the second cup which projects from the foremost one, an oscillating arm for operating each gripper, and a connecting link between each gripper and each of said arms arranged when brought in line with the adjacent arm to force the gripper against the side of the cup.

30. In an apparatus of the character described, reciprocating cup-feeding means adapted to support a series of horizontal cups nested together bottom foremost, a gage against which the bottom of the foremost cup is pressed by said feeding means, and connections between said means and said gage by which the latter is displaced from engagement with the cup after the cups have been fed forward, in combination with a liquid reservoir having a discharge outlet, and conveying means for taking the foremost cup from such supply and placing it beneath said outlet.

31. In an apparatus of the character described, reciprocating cup-feeding means adapted to support a series of horizontal cups nested together bottom foremost, a gage against which the bottom of the foremost cup is pressed by said feeding means, gripping means for holding the second cup of the series, and connections between said feeding means and said gage and grippers, whereby the latter are pressed against the second cup of the series and the gage is removed from in front of the foremost cup when the feeding means are retracted preparatory to a subsequent feed, in combination with a liquid reservoir having a discharge outlet, and conveying means for taking the foremost cup from such supply and placing it beneath said outlet.

32. In an apparatus of the character described, a reciprocating feeder adapted to advance a series of cups in line, bottom foremost, a gage for positioning the foremost one of the series and arresting the feeding movement thereof, a liquid container having an outlet a cup carrier operable to grasp the foremost cup and transfer it to a position ready for use, and arranged to carry such cup into position beneath said outlet where it may receive liquid therefrom, and devices operated by said feeding means for gripping the second cup of the series and moving the gage out of the way of the foremost cup before said cup is grasped by said carrier.

33. In an apparatus of the character described in which cups are supported horizontally bottom foremost, and nested together, feeding means consisting of horizontal bars and devices for raising said bars into contact with the cups and moving them forward to feed the cups, and supplemental positive feeding jaws connected with said

bars and operated by the upward movement thereof to project beyond the tangent surfaces of said bars behind the rim of a cup and engage the same positively, in combination with a liquid reservoir having a discharge outlet, and conveying means for taking the foremost cup from such supply and placing it beneath said outlet.

34. In an apparatus of the character described, parallel supporting bars adapted to support a series of cups in a horizontal position, feeding bars arranged beside and normally below the supporting surfaces of said bars, means for elevating said bars into contact with the cups and moving them forward to feed the cups, and auxiliary feeding devices consisting of pointed feed dogs pivoted to said feed bars in rear of their operative ends, and extending rearwardly from their pivots so as to engage and be held at a uniform elevation by the stationary bars, such connection causing the operative ends of the feed dogs to be elevated above the feed bars when the latter are raised, in combination with a liquid reservoir having a discharge outlet, and conveying means for taking the foremost cup from such supply and placing it beneath said outlet.

35. In an apparatus of the character described, parallel supporting bars adapted to support a series of cups in a horizontal position, feeding bars arranged beside and normally below the supporting surfaces of said bars, means for elevating said bars into contact with the cups and moving them forward to feed the cups, auxiliary feeding devices consisting of pointed feed dogs each engaged at its rear end with one of the stationary bars so as to be held at this point in a straight locus, and pivoted between its ends to one of the feed bars, the forward end being elevated above the tangent surface of the feed bar when the latter is raised so as to engage the projecting rim of a cup, in combination with a liquid reservoir having a discharge outlet, and conveying means for taking the foremost cup from such supply and placing it beneath said outlet.

36. In an apparatus of the character described, parallel supporting bars adapted to support a series of cups in a horizontal position, feeding bars arranged beside and normally below the supporting surfaces of said bars, means for elevating said bars into contact with the cups and moving them forward to feed the cups, auxiliary feeding devices consisting of pointed feed dogs each engaged at its rear end with one of the stationary bars so as to be held at this point in a single horizontal locus, and pivoted between its ends to one of the feed bars, the forward end being elevated above the tangent surface of the feed bar when the latter is raised so as to engage the projecting rim of a cup, said feed dogs having provision for longitudinal movement relatively to the supporting and feed bars and being yieldingly urged forward, in combination with a liquid reservoir having a discharge outlet, and conveying means for taking the foremost cup from such supply and placing it beneath said outlet.

37. In an apparatus of the character described, parallel supporting bars adapted to support a series of cups in a horizontal position, feeding bars arranged beside and normally below the supporting surfaces of said bars, means for elevating said bars into contact with the cups and moving them forward to feed the cups, and supporting fingers for the forward end of the leading cup engaged with said feed bars in such a way as to be raised above the elevation thereof when the latter are raised, so as to lift the forward cup and support it as it leaves the stationary supporting bars, in combination with a liquid reservoir having a discharge outlet, and conveying means for taking the foremost cup from such supply and placing it beneath said outlet.

38. In an apparatus of the character described, a horizontal frame on which cups are held in horizontal series, a liquid container having an outlet a traveling cup carrier adapted to pick up the foremost cup of the series and transfer it into an upright position where it may be taken by the user, and arranged to carry such cup into position beneath said outlet where it may receive liquid issuing therefrom, means for feeding the series of cups into position where the foremost one may be grasped by said cup carrier, and a support for holding the foremost cup elevated until the carrier may be engaged with it.

39. In an apparatus of the character described, a support on which cups are arranged to lie on their sides, a liquid container having an outlet a cup carrier constrained to travel from the end of said support and to remove cups therefrom, and arranged to carry such cup into position beneath said outlet where it may receive liquid issuing therefrom, feeding means for advancing the cups from said support over the path of said carrier, and an auxiliary support for holding the cup elevated until the carrier is moved beneath it.

40. In an apparatus of the character described, a support on which cups are arranged to lie on their sides, a liquid container having an outlet a cup carrier constrained to travel from the end of said support and to remove cups therefrom, and arranged to carry such cup into position beneath said outlet where it may receive liquid issuing therefrom, feeding means for advancing the cups from said support over the path of said carrier, an auxiliary support

projecting beyond said first support, and means for raising said auxiliary support when the cups are advanced to provide a space beneath the foremost cup for the carrier.

41. In an apparatus of the character described, a stationary support adapted to hold a supply of cups, a carrier for taking cups one at a time from said supply and placing them in position to receive supplies of the liquid dispensed by the apparatus, and means for placing a reserve supply of cups on said support when the previous supply becomes exhausted.

42. In an apparatus of the character described, a support adapted to hold a supply of cups, a carrier for taking cups one at a time from said supply and placing them in position to receive supplies of the liquid dispensed by the apparatus, a holder containing a reserve supply of cups, constantly impelled means tending to deposit such reserve cups on said support, provisions normally rendering said means inoperative, and an escape device for permitting operation of said means when the supply on said support becomes exhausted.

43. In an apparatus of the character described, a support adapted to hold a supply of cups, a carrier for taking cups one at a time from said supply and placing them in position to receive supplies of the liquid dispensed by the apparatus, a holder carrying a reserve supply of cups, means tending to deposit such reserve cups on said support, a stop normally preventing operation of said means, and means operated simultaneously with the removal of cups by said carrier for displacing said stop and permitting such operation of said means when the supply of cups already on the support becomes exhausted.

44. In an apparatus of the character described, a support adapted to hold a supply of cups, a carrier for taking cups one at a time from said supply and placing them in position to receive supplies of the liquid dispensed by the apparatus, a holder carrying a reserve supply of cups, means tending to deposit such reserve cups on said support, a stop normally preventing operation of said means, a ratchet and pawl mechanism actuated step by step upon each trip of said carrier, and a device carried by said ratchet and pawl mechanism located so as to displace said stop and permit such means to become operative for the purpose described upon removal of the last cup from the previous supply upon said support.

45. In an apparatus of the character described, having a discharge conduit for liquid and containing a supply of cups in a horizontal position, a carrier for taking cups from said supply and placing them upright under the outlet of said conduit; said carrier comprising a traveler, a holder pivotally mounted on said traveler so as to swing between an upright and a recumbent position, a catch on said holder, a latch on the traveler engageable with said catch to retain the holder in its recumbent position; an actuator for said carrier connected thereto in such manner that it tends to tilt the holder in the direction of travel before imparting movement to the traveler; and a stop for preventing movement of the traveler in one direction until the carrier has been laid against the traveler and secured by said latch.

46. In an apparatus of the character described having a discharge conduit for liquid and containing a supply of cups in a horizontal position, a carrier for taking cups from said supply and placing them upright under the outlet of said conduit; said carrier comprising a traveler, a holder pivotally mounted on said traveler so as to swing between an upright and a recumbent position, a catch on said holder, a latch on the traveler engageable with said catch to retain the holder in its recumbent position; an actuator for said carrier connected thereto in such manner that it tends to tilt the holder in the direction of travel before imparting movement to the traveler; and a stop for preventing movement of the traveler in one direction until the carrier has been laid against the traveler and secured by said latch, said stop being released by said catch when the latter is in position to be locked by said latch.

47. In an apparatus of the character described having a discharge conduit for liquid and containing a supply of cups in a horizontal position, a carrier for taking cups from said supply and placing them upright under the outlet of said conduit; said carrier comprising a traveler, a holder pivotally mounted on said traveler so as to swing between an upright and a recumbent position, a catch on said holder, a latch on the traveler engageable with said catch to retain the holder in its recumbent position; an actuator for said carrier connected thereto in such manner that it tends to tilt the holder in the direction of travel before imparting movement to the traveler; and a stop spring-actuated to engage the traveler when the latter is in its forward position and prevent rearward movement thereof until the holder is swung against the traveler and locked by said latch.

48. In an apparatus of the character described having a discharge conduit for liquid and containing a supply of cups in a horizontal position, a carrier for taking cups from said supply and placing them upright under the outlet of said conduit; said carrier comprising a traveler, a holder pivotally mounted on said traveler so as to swing

between an upright and a recumbent position, a catch on said holder, a latch on the traveler engageable with said catch to retain the holder in its recumbent position; an actuator for said carrier connected thereto in such manner that it tends to tilt the holder in the direction of travel before imparting movement to the traveler; a stop located at the forward limit of travel of the carrier so as to release said latch and arrest the traveler, permitting the holder to swing into its upright position, and a second stop or detent arranged to engage the traveler at the same time and prevent its rearward movement until the holder is swung into recumbent position.

49. In an apparatus of the character described having a discharge conduit for liquid and containing a supply of cups in a horizontal position, a carrier for taking cups from said supply and placing them upright under the outlet of said conduit; said carrier comprising a traveler, a holder pivotally mounted on said traveler so as to swing between an upright and a recumbent position, a catch on said holder, a latch on the traveler engageable with said catch to retain the holder in its recumbent position; an actuator for said carrier connected thereto in such manner that it tends to tilt the holder in the direction of travel before imparting movement to the traveler; a stop located at the forward limit of travel of the carrier so as to release said latch and arrest the traveler, permitting the holder to swing into its upright position, and a second stop or detent arranged to engage the traveler at the same time and prevent its rearward movement until the holder is swung into recumbent position, said second stop or detent being arranged to be displaced to release the traveler by said holder catch on coming into place to be locked by the latch.

50. In an apparatus of the character described having a liquid delivering spout and a magazine of cups, a carrier for removing cups from the magazine and placing them beneath the spout, including a traveling holder and gripping jaws pivoted thereon, and an actuator for said carrier connected to said jaws eccentrically of their pivots so as to swing them toward one another prior to the travel of the carrier as a whole from its cup-receiving position, and to swing them apart prior to movement of the carrier into said position.

51. In an apparatus of the character described having a liquid delivering spout and a magazine of cups, a carrier for removing cups from the magazine and placing them beneath the spout, including a traveling holder and gripping jaws pivoted thereon, an actuator for said carrier connected to said jaws eccentrically of their pivots so as to swing them toward one another and apart prior to the movement of the carrier out of and into cup-receiving position respectively, and locking members for securing said jaws in gripping and separated relations.

52. In an apparatus of the character described having a liquid delivering spout and a magazine of cups, a carrier for removing cups from the magazine and placing them beneath the spout, including a traveling holder and gripping jaws pivoted thereon, an actuator for said carrier connected to said jaws eccentrically of their pivots so as to swing them toward one another and apart prior to the movement of the carrier out of and into cup-receiving position respectively, and coöperating locking members on said jaws and holder respectively for securing the jaws in gripping separated relations.

53. In an apparatus of the character described having a liquid delivering spout and a magazine of cups, a carrier for removing cups from the magazine and placing them beneath the spout, including a traveling holder and gripping jaws pivoted thereon, an actuator for said carrier connected to said jaws eccentrically of their pivots so as to swing them toward one another and apart prior to the movement of the carrier out of and into cup-receiving position respectively, locking members for securing said jaws in gripping and separated relations, and means for releasing said locking members at each limit of travel of the carrier.

54. In an apparatus of the character described having a liquid delivering spout and a magazine of cups, a carrier for removing cups from the magazine and placing them beneath the spout, including a traveling holder and gripping jaws pivoted thereon, an actuator for said carrier connected to said jaws eccentrically of their pivots so as to swing them toward one another and apart prior to the movement of the carrier out of and into cup-receiving position respectively, an arm secured to each of said jaws, and locking dogs on the holder; said arms being carried by the movement of the jaws past said locking dogs, and being engaged by the latter alternately on opposite sides.

55. In an apparatus of the character described having a liquid delivering spout and a magazine of cups, a carrier for removing cups from the magazine and placing them beneath the spout, including a traveling holder and gripping jaws pivoted thereon, an actuator for said carrier connected to said jaws eccentrically of their pivots so as to swing them toward one another and apart prior to the movement of the carrier out of and into cup-receiving position respectively, an arm secured to each of said jaws, spring-projected locking dogs carried by the carrier adapted to engage said arms alternately on opposite sides, and stationary stops ar-

ranged to engage and retract said dogs at each limit of travel of the carrier, to free said arms and permit the jaws to grasp a cup when adjacent the cup magazine, and to release the cup after bringing the latter beneath the spout.

56. In an apparatus of the character described, a locking dog having an edge and inclined sides, and arms at each side of said dog, in combination with means arranged to engage said arms alternately to retract said dog.

57. A liquid and cup dispensing apparatus comprising a casing, a liquid delivering spout leading through a wall of the casing, a normally closed gate in said wall below said spout, a cup support arranged to hold a supply of cups within said casing, a cup carrier, means to actuate said carrier so as to take a cup from such supply and place it under the spout, and connections operated by said means for opening said gate to permit passage of said cup carrier through the wall.

58. A liquid and cup dispensing apparatus comprising a casing, a liquid delivering spout leading through a wall of the casing, such wall having an opening beneath the spout, a cup carrier movable to carry cups from within the casing through such opening and present them beneath said spout, a gate normally closing said opening, a handle by which said carrier is operated, and connections operated by said handle for opening the gate as the carrier approaches and passes through said opening.

59. A liquid and cup dispensing apparatus comprising a liquid reservoir, a measuring chamber, an outlet spout therefrom, a valve controlling the outlet of liquid from said chamber, a cup reservoir, a reciprocating carrier for transferring cups from said reservoir to liquid-receiving position beneath said spout, an actuator for operating said valve, a toothed disk secured to said actuator and oscillated thereby, connections between said disk and carrier whereby the latter is operated by oscillations of the disk including a rock shaft arranged to drive said carrier and connecting rod engaged with said rock shaft and disk, and a detent engaged with the teeth of said disk for preventing movement thereof.

60. A liquid and cup dispensing apparatus comprising a liquid reservoir, a measuring chamber, an outlet spout therefrom, a valve controlling the outlet of liquid from said chamber, a cup reservoir, a carrier for removing cups from said reservoir and transferring them into liquid-receiving position beneath said spout, an actuator for operating said valve, connections through which said actuator operates said carrier, a detent for preventing movement of said actuator, and a trip for disengaging said detent and permitting operation of said actuator and the parts controlled thereby.

61. A liquid and cup dispensing apparatus comprising a liquid reservoir, a measuring chamber, an outlet spout therefrom, a valve controlling the outlet of liquid from said chamber, a cup reservoir, a carrier for transferring cups from said reservoir to liquid-receiving position beneath said spout, an actuator for operating said valve, connections through which said actuator operates said cup carrier, and a slide having a chamber in it also operated by said actuator.

62. In an apparatus for dispensing cups and limited quantities of a beverage, a liquid reservoir, a measuring chamber, a discharge spout leading therefrom, a valve controlling the discharge of fluid from said spout, an exposed handle connected to said valve and adapted by manual oscillation to open and close the latter, a cup magazine, a cup carrier, a rock shaft, a connecting rod and rock arms uniting said rock-shaft with said valve handle whereby the former is oscillated by the latter, and actuating arms connected with said rock shaft and with the cup carrier and moved back and forth by the oscillation of said valve handle to grip cups and transport them singly from the magazine into position to receive liquid discharged from said spout.

63. In an apparatus for dispensing cups and limited quantities of a beverage, a liquid reservoir, a measuring chamber, a discharge spout leading therefrom, a valve controlling the discharge of fluid from said spout, an exposed handle fastened to the stem of said valve, a toothed disk secured to said valve stem, a pin mounted upon said disk eccentrically of the valve stem, a link extending from said pin, a rock-shaft, an arm connected to said rock-shaft and to said link, carrier-actuating arms secured to said rock shaft and engaged with said carrier, whereby the latter is moved back and forth to pick up cups and place them beneath the spout when the valve handle is actuated to open and close the valve, a locking pawl engaging a tooth of said segment so as normally to prevent valve-opening oscillation of the handle, a swinging arm, a trip or latch normally holding said arm in an elevated position and adapted to be displaced so as to disengage said arm and allow the latter to be depressed, and connections between said arm and said pawl whereby depression of the arm disengages the pawl from the toothed disk.

64. In a liquid vending device, a liquid supply, provided with a controlling valve, a measuring chamber communicating with said valve, a turning cock controlling the discharge from said chamber, and a cup-de-

livering device connected to operate said cock to discharge after the delivery of a cup into alinement therewith.

65. In a liquid vending device, a valved liquid supply, a measuring chamber communicating therewith, means for controlling the discharge from said chamber, and a traveling cup deliverer connected to actuate said supply valve and discharge controlling means.

66. In a dispensing apparatus, the combination with a fluid container, of means for holding a series of cups in a horizontal position, and means for transferring the cups from the holding means to a position to receive fluid from the container.

67. In a dispensing apparatus, the combination with a fluid container, of means for holding a series of cups in a horizontal position, means for transferring the cups from the holding means to a position to receive fluid from the container, means for holding horizontally a plurality of reserve series of cups, and means for supplying said series therefrom one by one to the holding means from which the transfer of the cups for the reception of fluid occurs.

In testimony whereof I have affixed my signature, in presence of two witnesses.

LESLIE D. JANNELL.

Witnesses:
LOUIS H. VEILLEUX,
S. J. GAUGH.