AU9515615

(12) PATENT ABRIDGMENT (11) Document No. AU-B-15615/95
(19) AUSTRALIAN PATENT OFFICE (10) Acceptance No. 692514

(54) Title
CYLINDRICAL AIR FILTER WITH RADIALLY DIRECTED SEAL AND METHOD OF MANUFACTURING A HOUSING FOR SAME

International Patent Classification(s)
(51)[6] **B01D 046/24** **F02M 035/024**

(21) Application No. : **15615/95** (22) Application Date : **09.01.95**

(87) PCT Publication Number : **WO95/19832**

(30) Priority Data

(31) Number	(32) Date	(33) Country
189890	**21.01.94**	**US UNITED STATES OF AMERICA**

(43) Publication Date : **08.08.95**

(44) Publication Date of Accepted Application : **11.06.98**

(71) Applicant(s)
DONALDSON COMPANY, INC.

(72) Inventor(s)
PAUL R COULONVAUX

(74) Attorney or Agent
PHILLIPS ORMONDE & FITZPATRICK , 367 Collins Street, MELBOURNE VIC 3000

(56) Prior Art Documents
EP 0470330
EP 0423435
FR 2255933

(57) Claim

1. An air filter housing including:

(a) a tubular metal member having open first and second ends, and further having a particulate laden air inlet, said tubular metal member including a plurality of indented portions positioned about said first end;

(b) a plastic end cap in covering relation to said tubular metal member first end, said plastic end cap having a generally cylindrical air flow outlet therein, and said plastic end cap having a plurality of complementary recesses therein configured to receive said inwardly projecting portions therein to secure said plastic end cap to said tubular metal member first end; and,

(c) a removable cover enclosing said second end of said tubular metal member.

OPI DATE 08/08/95 APPLN. ID 15615/95
AOJP DATE 21/09/95 PCT NUMBER PCT/US95/00264
AU9515615

INTE

(51) International Patent Classification 6 :
B01D 46/24, F02M 35/024

A1

(11) International Publication Number: WO 95/19832

(43) International Publication Date: 27 July 1995 (27.07.95)

(21) International Application Number: PCT/US95/00264

(22) International Filing Date: 9 January 1995 (09.01.95)

(30) Priority Data:
08/189,890 21 January 1994 (21.01.94) US

(71) Applicant: DONALDSON COMPANY, INC. [US/US]; 1400 West 94th Street, Minneapolis, MN 55440-1299 (US).

(72) Inventor: COULONVAUX, Paul, R.; Avenue de Proqueville 136/B87, B-1200 Bruxelles (BE).

(74) Agent: BRUESS, Steven, C.; Merchant, Gould, Smith, Edell, Welter & Schmidt, 3100 Norwest Center, 90 South Seventh Street, Minneapolis, MN 55402 (US).

(81) Designated States: AM, AT, AU, BB, BG, BR, BY, CA, CH, CN, CZ, DE, DK, EE, ES, FI, GB, GE, HU, JP, KE, KG, KP, KR, KZ, LK, LR, LT, LU, LV, MD, MG, MN, MW, MX, NL, NO, NZ, PL, PT, RO, RU, SD, SE, SI, SK, TJ, TT, UA, UZ, VN, European patent (AT, BE, CH, DE, DK, ES, FR, GB, GR, IE, IT, LU, MC, NL, PT, SE), OAPI patent (BF, BJ, CF, CG, CI, CM, GA, GN, ML, MR, NE, SN, TD, TG), ARIPO patent (KE, MW, SD, SZ).

Published
With international search report.
Before the expiration of the time limit for amending the claims and to be republished in the event of the receipt of amendments.

692514

(54) Title: CYLINDRICAL AIR FILTER WITH RADIALLY DIRECTED SEAL AND METHOD OF MANUFACTURING A HOUSING FOR SAME

(57) Abstract

An air filter has a tubular metal housing with an air inlet and a plastic end cap (22) affixed to one end of the housing. The opposite end of the housing is enclosed by a removable cover (50). The plastic end cap (22) has an integral cylindrical air outlet with a portion thereof extending into the tubular housing. A generally cylindrical air filter element includes an inner liner, an outer liner, filter media captured therebetween, a closed end and an open end. The open end of the filter element has an end cap formed of an elastomeric material with an opening defined by a generally cylindrical radially inward-facing surface. The diameter of the opening is smaller than the outside diameter of the opening of that portion of the outlet member of the end cap that extends into the housing. The filter element is mounted on that portion of the outlet member extending into the tubular housing and the elastomeric material provides a seal.

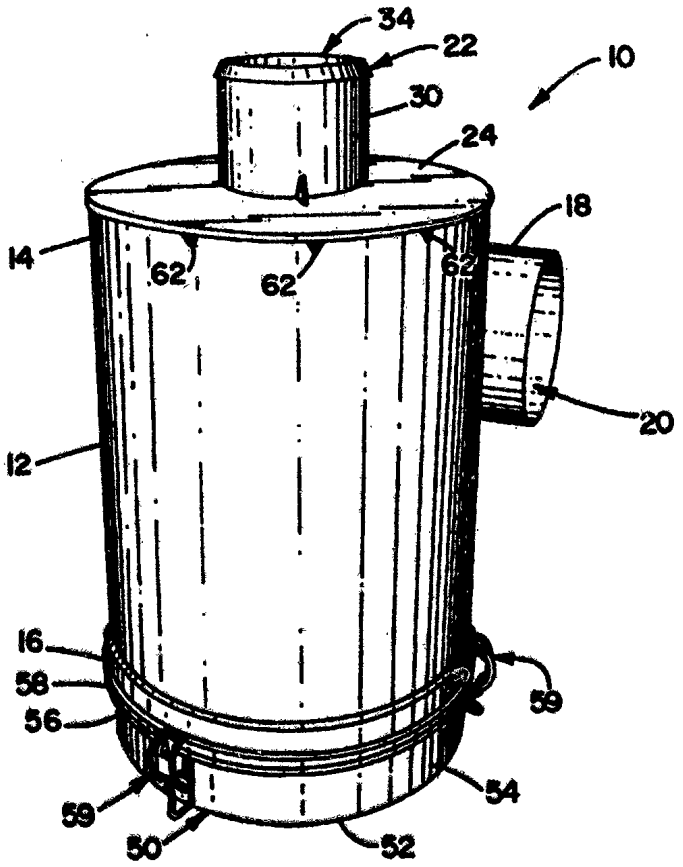

CYLINDRICAL AIR FILTER WITH RADIALLY DIRECTED SEAL AND METHOD OF MANUFACTURING A HOUSING FOR SAME

BACKGROUND OF THE INVENTION

The present invention relates generally to air cleaners or air filters and more specifically to air cleaners with cylindrical pleated paper filter elements which are used primarily on the over-the-road trucks and agricultural vehicles. Such applications generally are severe filtering environments.

U.S. Patent 3,078,650 shows one prior art structure of air cleaner of this type. The air cleaner has a tubular metal housing with an inlet for dust laden air. A cylindrical pleated paper filter element is mounted within the housing. A clean air outlet communicates with the interior of the pleated paper filter element. A seal must be provided between the pleated paper element and the outlet so that the dust laden inlet air will be forced through the pleated paper media of the filter whereby particulates are removed from the air flow before it exits from the filter. In the '650 patent the seal between the filter element and the outlet is provided by a gasket secured to the filter element. The gasket engages an end wall of the tubular housing with the filter element held in place by a yoke and associated bolt and nut assembly.

U.S. Patent 4,720,292 discloses another prior art structure for a cylindrical air filter of the type of the present invention. In its preferred embodiment, the housing of the '292 air filter is formed of a plastic material. A cylindrical pleated paper filter element is mounted within the housing. The pleated paper element has an open end for fluid communication with the air outlet. The open end of the filter element has a ring like end cap that is preferably made from an elastomer such as urethane foam which has a relatively soft, rubber-like consistency. The air filter element is mounted on the air outlet tube, and a seal is provided by engagement of the end cap with the tubular

outlet member.

In order to manufacture an air filter using a plastic housing, a mold for the housing is typically needed. A separate mold would typically be used for housings that vary in size as well as variations in location of the air inlet. The tooling for molds for each possible application of the air filter can be quite expensive.

SUMMARY OF THE INVENTION

The air cleaner of the present invention incorporates a tubular housing with an open end and an air inlet. An end cap is affixed to and encloses the open end of the tubular housing. The end cap has a generally cylindrical portion extending into the interior of the tubular housing. The filter element is generally cylindrical with an inner liner, outer liner and filter medium sandwiched there between. The filter element has an end cap formed of elastomeric material. The end cap has an opening into the interior of the filter element. The opening is defined by a generally cylindrical radially inward-facing surface with the opening having a diameter that is smaller than the outside diameter of the portion of the end cap that extends into the housing. The filter element is attached to the end cap by inserting the outlet portion of the end cap into the opening defined in the end cap of the filter element. The end cap of the filter element and the outlet portion of the end cap affixed to the housing provide a seal. A cover is removably mounted to enclose the second end of the tubular housing.

In the preferred embodiment the tubular housing is formed of a suitable metal material and the end cap is a molded plastic. The metal housing is provided with a plurality of engagement members positioned about its first end and projecting inwardly.

AUSTRALIAN PATENT OFFICE

SUMMARY OF THE INVENTION

According to one aspect of the present invention, there is provided an air filter housing including:

(a) a tubular metal member having open first and second ends, and further having a particulate laden air inlet, said tubular metal member including a plurality of indented portions positioned about said first end;

(b) a plastic end cap in covering relation to said tubular metal member first end, said plastic end cap having a generally cylindrical air flow outlet therein, and said plastic end cap having a plurality of complementary recesses therein configured to receive said inwardly projecting portions therein to secure said plastic end cap to said tubular metal member first end; and,

(c) a removable cover enclosing said second end of said tubular metal member.

According to a further aspect of the present invention, there is provided an air filter including the above air filter housing and a generally cylindrical filter element mounted in the housing.

According to another aspect of the present invention, there is provided a method of manufacturing the above air filter housing, the method including the steps of:

(a) forming a tubular metal member having a first open end and a second open end;

(b) inserting a plastic end cap into said first end of said tubular metal member and securing it in position; and,

(c) removably positioning a cover over the second end.

In the preferred embodiment the tubular member is formed of a suitable metal material and the end cap is a molded plastic. Thus, in its preferred embodiment the present invention provides the advantages of a metal housing for air filters particularly designed for rugged environments and a filter element seal structure eliminating the mechanical arrangement such as that shown in the '650 patent described above.

These and other advantages of the present invention will become apparent with reference to

AUSTRALIAN PATENT OFFICE 13

the accompanying drawings, detailed description of the preferred embodiment, and claims.

BRIEF DESCRIPTION OF THE DRAWINGS

Figure 1 is a view in perspective of the air filter of the present invention;

Figure 2 is an elevational view in partial section with portions removed;

Figure 3 is an enlarged fragmentary view in section illustrating the attachment of the end cap to the tubular housing member of the air filter of the present invention.

DESCRIPTION OF THE PREFERRED EMBODIMENT

Referring to the drawings wherein like numerals represent like parts throughout several views, there is disclosed in Figure 1 an air cleaner or filter having a housing 10. The air cleaner housing 10 has a generally tubular housing member 12 with a first end 14 and a second end 16. In the preferred embodiment housing member 12 is formed of a suitable metal material. Housing member 12 has an air inlet 18 defining an opening 20 for the introduction of particular laden air into the filter. An end cap 22 is affixed to housing 12 at first end 14 to enclose first end 14 as will be described in more detail hereafter. End cap 22 is a generally planar circular base member 24 with an integral ring member 26 disposed at its outer circumference and enclosed within housing member 12. A second ring member 28 is also formed integrally with base member 24 and positioned within housing member 12. Ring members 26 and 28 are concentrically disposed with respect to each other. Also integrally formed with base member 24 is an air outlet 30 extending above the exterior surface of end cap 22. Air outlet has a tubular portion 32 extending into the interior of housing member 12. Air outlet 30 defines an opening at 34 through which filtered air exits from the air filter.

Disposed within housing member 12 is an air filter element 36. Air filter element 36 is of the type disclosed in U.S. Patent 4,720,292, the disclosure of which is incorporated herein by reference. It is a cylindrical element having a cylindrical liner 38 and a cylindrical outer liner 40, both constructed from perforated metal. A cylindrical pleated paper filter element 42 is mounted between liners 38 and 40. Element 36 has a closed end 44 in the form of a circular cap of urethane foam material molded thereon and having a relatively

AUSTRALIAN PATENT OFFICE 13

soft, rubber-like consistency. Closed end 44 is molded over and holds together the ends of liners 38 and 40 and filter element 42 and extends across the end of filter element 36 to provide a closed end.

Air filter element 36 has an open end disposed adjacent end cap 22. A ring-like end cap 46 is molded over the ends of liners 38, 36 and pleated paper filter element 42. End cap 46 is preferably made from an elastomeric material such as urethane foam material having a relatively soft, rubber-like consistency so that it is capable of functioning as a seal or gasket material. End cap 46 has a radially inward facing surface 48 adapted to engage the outer surface of tubular portion 32 of air outlet 30. Surface 48 defines a generally cylindrical opening with an inner diameter which is slightly smaller than the outside diameter of tubular portion 32. Thus, the elastomeric material of end cap 46 is compressed at surface 48 to provide a positive air seal between end cap 46 and air outlet 30. The open end of air filter element 36 is also captured between tubular portion 32 and second ring member 28 to properly position air filter element 36 within housing member 12.

Second end 16 of housing member 12 is enclosed by a cover 50 which is removably mounted to housing member 12. Cover 50 has an end member 52 and a side wall 54. Extending around side wall 54 is a ledge member 56. At second end 16 of housing member 12, a flange portion 58 is provided which is received on ledge member 56. Cover 50 has a plurality of spring-loaded clamps 59, the structure of which is well known in the prior art, which engage flange portion 58 to secure cover 50 thereto. End member 52 of cover 50 engages the closed end 44 of air filter element 36. Cover 50 may also be provided with a particular collection trap (not shown).

As shown in more detail in Figures 2 and 3, ring member 26 of end cap 22 provided with a plurality of recesses 60 spaced about its circumference. At its first end 14, housing member 12 has a plurality of inwardly projecting members 62 that mate with and are received within recesses 60 to affix end cap 22 to housing member 12. As previously described, in the preferred embodiment end cap 22 is formed of a plastic material, such as polypropylene, while housing member 12 is constructed of metal. Removable cover 50 may be either plastic or metal. Housing member 12 and end cap 22 are constructed in the following

AUSTRALIAN PATENT OFFICE

manner. Metal housing member 12 is made in accordance with well known prior art processes to the appropriate length and with air inlet 18 disposed at the desired location. End cap 22 is molded from a plastic material according to well known molding processes. End cap 22 is placed on first end 14 of housing member 12 in a snap-fit frictional engagement. Housing member 12 is stamped or otherwise indented inward about first end 14 at locations corresponding to recesses 60 in ring member 26. This metal stamping operation forms inward projections 62 that are received in recesses 62 to affix end cap 22 to housing 12. The air filter is further assembled by installing air filter element 36 within housing member 12 and attaching cover 50.

From the above description, it can be seen that the present invention in its preferred embodiment incorporates the advantageous seal structure of the '292 patent. The housing can be made according to various design specifications by a metal forming process eliminating the need and expense of designing a plastic mold for each filter configuration. Moreover, the seal arrangement eliminates the mechanical structure used in air cleaners of the type shown in the U.S. Patent 3,078,650.

Although a preferred embodiment of the invention has been disclosed, it should be understood that the same is capable of modification without departure from the scope and spirit of the invention as defined in the following claims.

AUSTRALIAN PATENT OFFICE

The claims defining the invention are as follows:

1. An air filter housing including:

(a) a tubular metal member having open first and second ends, and further having a particulate laden air inlet, said tubular metal member including a plurality of indented portions positioned about said first end;

(b) a plastic end cap in covering relation to said tubular metal member first end, said plastic end cap having a generally cylindrical air flow outlet therein, and said plastic end cap having a plurality of complementary recesses therein configured to receive said inwardly projecting portions therein to secure said plastic end cap to said tubular metal member first end; and,

(c) a removable cover enclosing said second end of said tubular metal member.

2. An air filter housing according to claim 1, wherein:

(a) said air flow outlet of the plastic end cap is provided with a portion extending into the interior of said tubular metal member.

3. An air filter housing according to claim 1 or 2, wherein:

(a) said plastic end cap includes a first radial ring disposed at its outer circumference; and,

(b) wherein said complementary recesses are positioned in said first radial ring.

4. An air filter housing according to any one of claims 1 to 3, wherein:

(a) said cover includes a plurality of clamps thereon, for releasably securing said cover to said tubular metal member.

5. An air filter housing according to any one of claims 1 to 4, wherein:

(a) said cover is a plastic cover.

6. An air filter housing according to any one of claims 1 to 5, wherein:

(a) said plastic end cap includes a first radial ring at its outer circumference and a second radial ring disposed concentrically with respect to said first ring.

7. An air filter housing according to claim 6, wherein:

(a) said first and second radial rings are integrally formed with said plastic end cap.

AUSTRALIAN PATENT OFFICE 13

8. An air filter housing according to any one of claims 1 to 7, wherein:

(a) said plastic end cap has a planar exterior surface with said portion of the outlet tube projecting therefrom.

9. An air filter housing according to any one of claims 1 to 8, wherein:

(a) said tubular metal member includes a peripheral flange at or adjacent said second end thereof; and,

(b) clamps are provided on said removable cover to engage said flange and releasably secure said cover to said tubular metal member.

10. An air filter housing according to any one of claims 1 to 9, wherein:

(a) said removable cover comprises metal or plastic.

11. An air filter housing according to any one of claims 1 to 10, wherein:

(a) said plastic end cap comprises polypropylene.

12. An air filter housing according to any one of claims 1 to 11, wherein:

(a) said plurality of indented portions project axially at an oblique angle to said tubular metal member.

13. An air filter housing according to claim 12, wherein:

(a) said plurality of indented portions project toward said first end of said tubular metal member.

14. An air filter housing according to any one of claims 1 to 13, wherein:

(a) said tubular metal member includes a region having a first average inner diameter; and,

(b) said second end of said tubular metal member includes a region having a second inner diameter; said second inner diameter being greater than said first average inner diameter.

15. An air filter housing according to claim 14, wherein:

(a) said removable cover includes an inner surface positioned in covering relation to an inner portion of said region of said tubular metal member second end having a second inner diameter.

16. An air filter, including:

(a) an air filter housing according to any one of claims 1 to 15; and

(b) a generally cylindrical filter element mounted in the housing.

17. An air filter according to claim 16, when appended to claim 2 or any claim appended thereto, wherein:

AUSTRALIAN PATENT OFFICE 13

(a) said filter element has a filter media and means for supporting said media, said filter element having a first and a second end, said filter element having an end cap on said first end thereof, said end cap being formed of elastomeric material and having a generally cylindrical radially inward-facing surface defining an opening into the interior of said filter element, said opening having a diameter smaller than the outside diameter of said portion of said air flow outlet extending into the interior of said tubular member, whereby said filter element is mounted on said portion of said air flow outlet to form a seal between said portion of said air flow outlet and said filter element.

18. An air filter according to claim 17, wherein:

(a) said filter element is provided with a generally cylindrical opening and wherein said portion of said air flow outlet extends into the cylindrical opening of said filter element.

19. An air filter according to either of claims 17 and 18, wherein:

(a) said filter media is pleated.

20. An air filter according to claim 19, wherein:

(a) said filter media is pleated paper media.

21. A method of manufacturing an air filter housing according to any one of claims 1 to 15, said method including steps of:

(a) forming a tubular metal member having a first open end and a second open end;

(b) inserting a plastic end cap into said first end of said tubular metal member, and securing it in position by means of a plurality of indented portions positioned about said first end projecting into a plurality of complementary recesses in the plastic end cap; and,

(c) removably positioning a cover over the second end.

22. A method of manufacturing an air filter housing according to claim 21, said method including the further step of:

(a) forming said tubular metal member with an air inlet.

23. A method of manufacturing an air filter housing according to claim 21 or 22, said method including the further step of:

(a) molding said plastic end cap having an air outlet and a generally cylindrical outer surface with the plurality of recesses formed therein.

AUSTRALIAN PATENT OFFICE 13

KW C:\WINWORD\RATES\SPEC\19515-95.DOC

24. A method of manufacturing an air filter housing according to claim 23, said method including the further step of:

(a) forming the indented portions in said tubular metal member to project inwardly into said recesses in said plastic end cap to affix said end cap to said tubular metal member.

25. An air filter housing, substantially as hereinbefore described with reference to what is shown in the accompanying drawings.

26. An air filter, substantially as hereinbefore described with reference to what is shown in the accompanying drawings.

27. A method of manufacturing an air filter housing, substantially as hereinbefore described with reference to what is shown in the accompanying drawings.

DATED: 17 April, 1998

PHILLIPS ORMONDE & FITZPATRICK

Attorneys for:

DONALDSON COMPANY, INC.

AUSTRALIAN PATENT OFFICE 13

KW G:\WINWORD\KATE\SPEC\15815-98.DOC

15615/95

1/2

FIG. 1

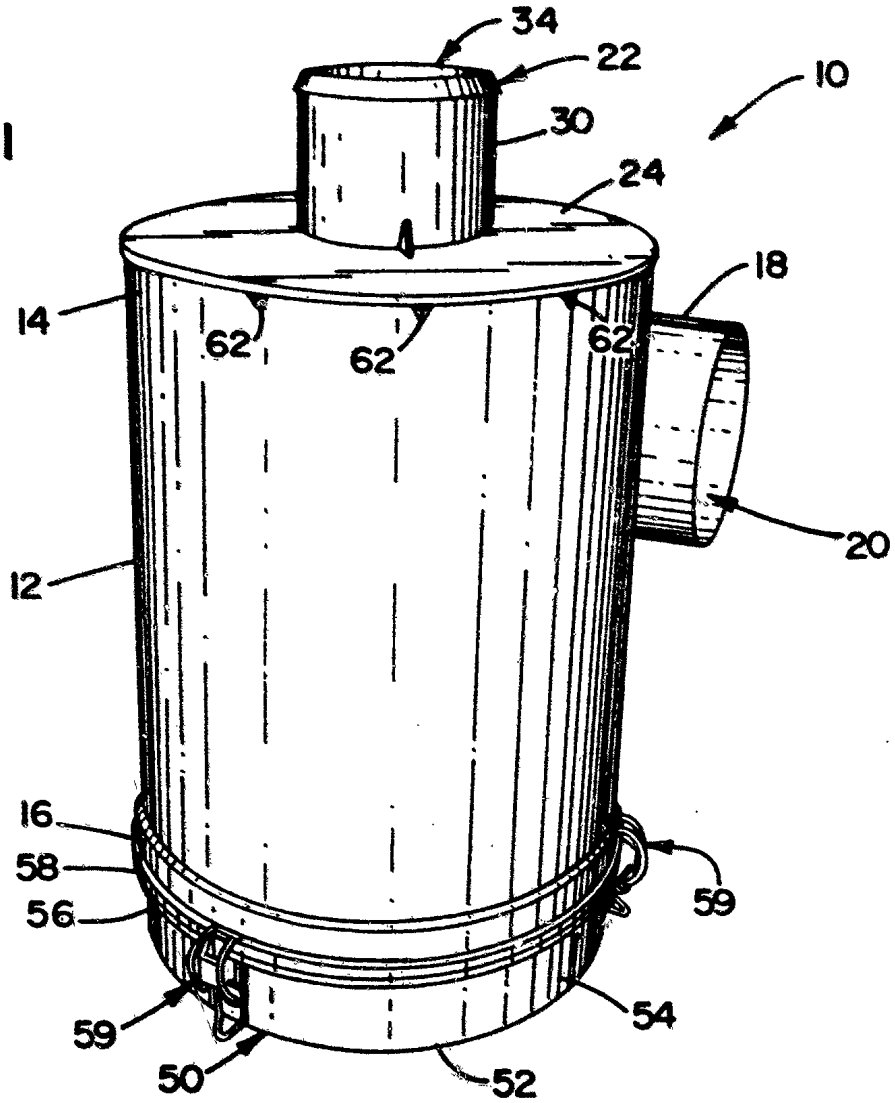

FIG. 3

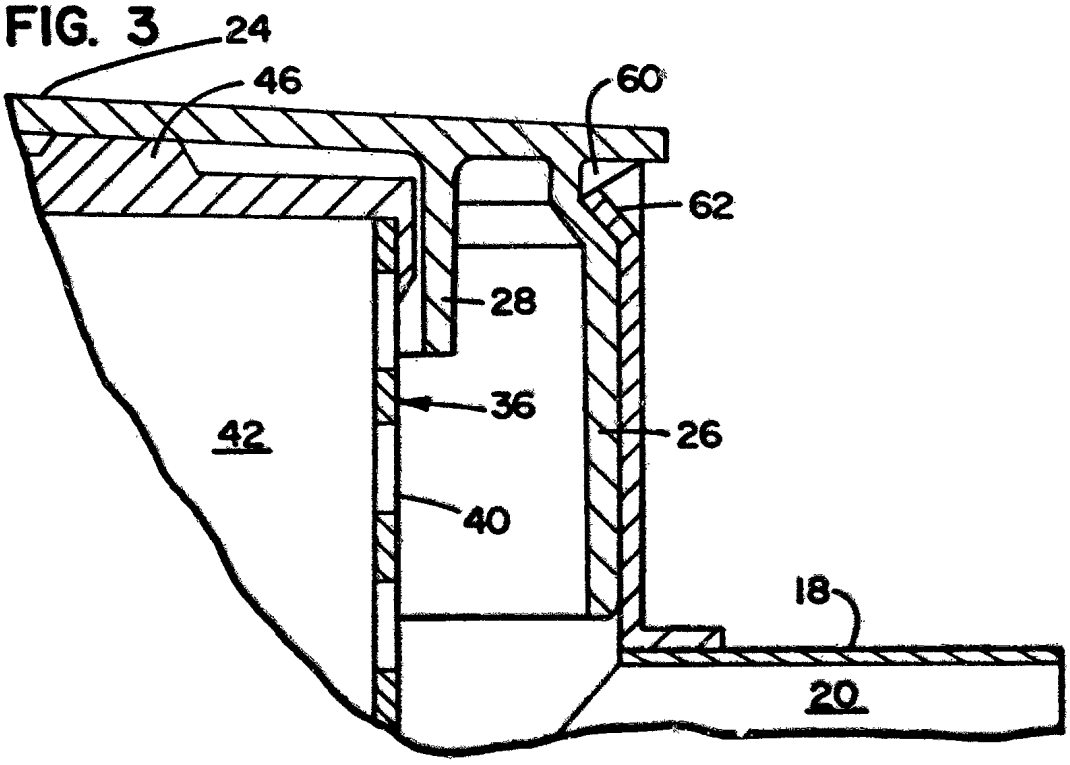

FIG. 2

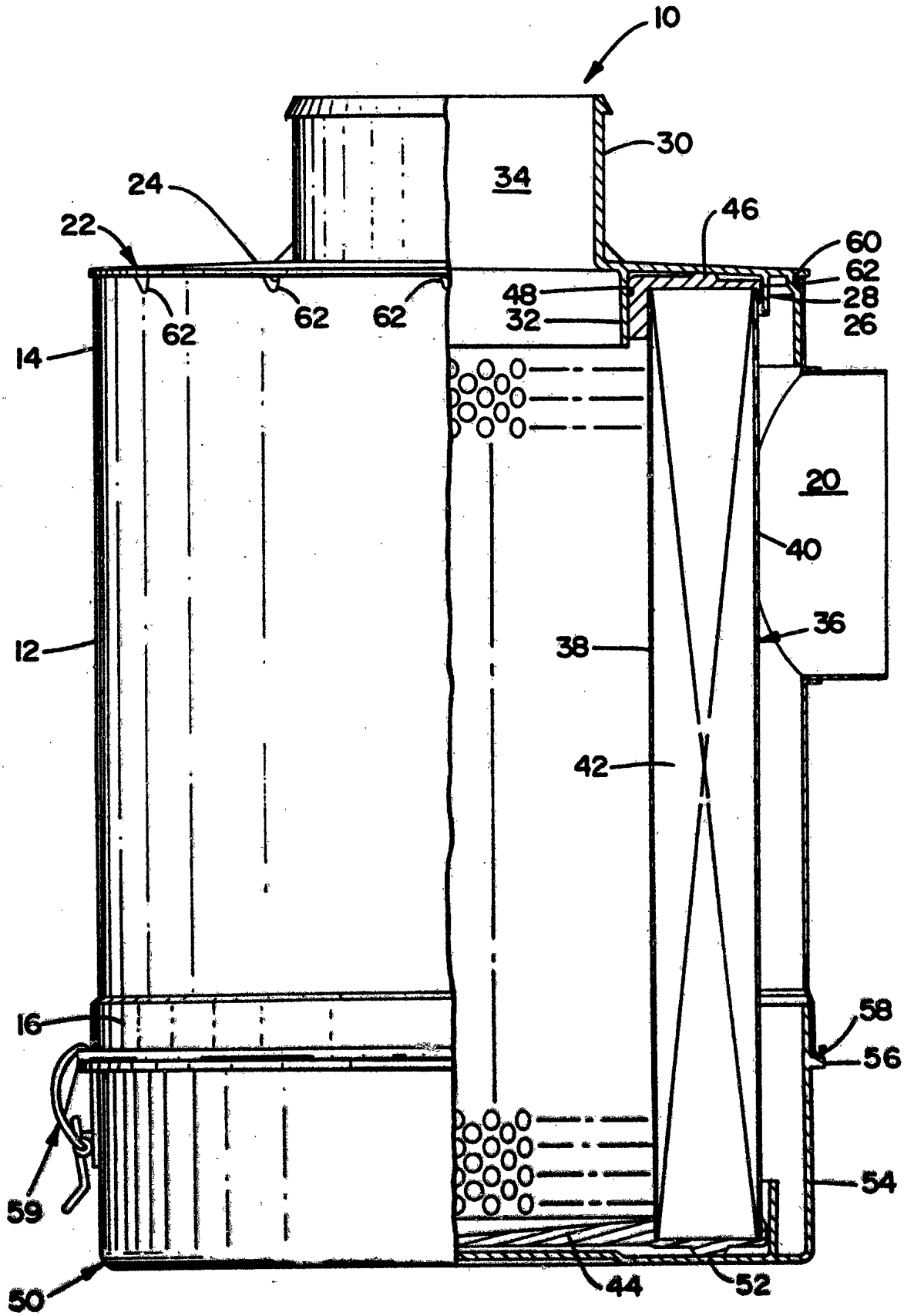
10
30
34
24
22
46
60
62
62
62
62
48
28
32
26
14
20
40
12
36
38
42
16
58
56
59
54
50
44
52

INTERNATIONAL SEARCH REPORT

International Application No
PCT/US 95/00264

A. CLASSIFICATION OF SUBJECT MATTER
IPC 6 B01D46/24 F02M35/024

According to International Patent Classification (IPC) or to both national classification and IPC

B. FIELDS SEARCHED

Minimum documentation searched (classification system followed by classification symbols)
IPC 6 B01D F02M

Documentation searched other than minimum documentation to the extent that such documents are included in the fields searched

Electronic data base consulted during the international search (name of data base and, where practical, search terms used)

C. DOCUMENTS CONSIDERED TO BE RELEVANT

Category*	Citation of document, with indication, where appropriate, of the relevant passages	Relevant to claim No.
A	EP,A,0 470 330 (FILTERWERK MANN & HUMMEL GMBH) 12 February 1992 see page 3, column 3, line 47 - column 4, line 38; figure 1 ---	1
A	EP,A,0 423 435 (FILTERWERK MANN & HUMMEL GMBH) 24 April 1991 see page 3, column 3, line 15 - column 4, line 48; figure 1 ---	1
A	FR,A,2 255 933 (SOFEP) 25 July 1975 see page 3, line 1 - line 35; figure 1 -----	1

☐ Further documents are listed in the continuation of box C.

☒ Patent family members are listed in annex.

* Special categories of cited documents :

"A" document defining the general state of the art which is not considered to be of particular relevance

"E" earlier document but published on or after the international filing date

"L" document which may throw doubts on priority claim(s) or which is cited to establish the publication date of another citation or other special reason (as specified)

"O" document referring to an oral disclosure, use, exhibition or other means

"P" document published prior to the international filing date but later than the priority date claimed

"T" later document published after the international filing date or priority date and not in conflict with the application but cited to understand the principle or theory underlying the invention

"X" document of particular relevance; the claimed invention cannot be considered novel or cannot be considered to involve an inventive step when the document is taken alone

"Y" document of particular relevance; the claimed invention cannot be considered to involve an inventive step when the document is combined with one or more other such documents, such combination being obvious to a person skilled in the art.

"&" document member of the same patent family

Date of the actual completion of the international search	Date of mailing of the international search report
29 May 1995	06. 06. 95

Name and mailing address of the ISA	Authorized officer
European Patent Office, P.B. 5818 Patentlaan 2 NL - 2280 HV Rijswijk Tel. (+ 31-70) 340-2040, Tx. 31 651 epo nl, Fax (+ 31-70) 340-3016	Pyfferoen, K

Form PCT/ISA/210 (second sheet) (July 1992)

INTERNATIONAL SEARCH REPORT

Inte onal Application No
PCT/US 95/00264

Patent document cited in search report	Publication date	Patent family member(s)		Publication date
EP-A-470330	12-02-92	DE-A-	4024898	13-02-92
		JP-A-	4234556	24-08-92
		US-A-	5167683	01-12-92
EP-A-423435	24-04-91	DE-A-	3934433	25-04-91
		DE-D-	59004500	17-03-94
		ES-T-	2051415	16-06-94
		US-A-	5071456	10-12-91
FR-A-2255933	25-07-75	NONE		