US00D348968S

United States Patent [19]

Elejaga

[11] **Patent Number: Des. 348,968**

[45] **Date of Patent: ** Jul. 19, 1994**

[54] **PULLING AND LIFTING WINCH**

[75] Inventor: **José M. Elejaga**, Getxo, Spain

[73] Assignee: **ALBA Maquinaria para la Construccion S.A.**, Sondika, Spain

[**] Term: **14 Years**

[21] Appl. No.: **841,454**

[22] Filed: **Feb. 27, 1992**

[30] **Foreign Application Priority Data**

Aug. 28, 1991 [ES] Spain 125,768

[52] **U.S. Cl.** **D34/35**; D34/28

[58] **Field of Search** 254/264, 252; D34/28, D34/33, 34, 35

[56] **References Cited**

U.S. PATENT DOCUMENTS

1,920,686	8/1933	Faure	254/264
3,528,139	9/1970	Desplats	254/264
3,916,487	11/1975	Rinio	254/264
4,480,816	11/1984	Gortan	254/264

FOREIGN PATENT DOCUMENTS

226416	8/1962	Austria	254/264

Primary Examiner—Kay H. Chin
Attorney, Agent, or Firm—Browdy and Neimark

[57] **CLAIM**

The ornamental design for a pulling and lifting winch, as shown and described.

DESCRIPTION

FIG. **1** is a left side elevational view of a pulling and lifting winch showing my new design;
FIG. **2** is a top plan view thereof;
FIG. **3** is a right side elevational view thereof;
FIG. **4** is a front elevational view thereof;
FIG. **5** is a rear elevational view thereof;
FIG. **6** is a left side elevational view of a second embodiment of the pulling and lifting winch;
FIG. **7** is a top plan view of FIG. **6**;
FIG. **8** is a right side elevational view of FIG. **6**;
FIG. **9** is a front elevational view of FIG. **6**;
FIG. **10** is a rear elevational view of FIG. **6**;
FIG. **11** is a perspective view of the embodiment of the invention shown in FIG. **1**; and,
FIG. **12** is a perspective view of the embodiment of the invention shown in FIG. **6**.

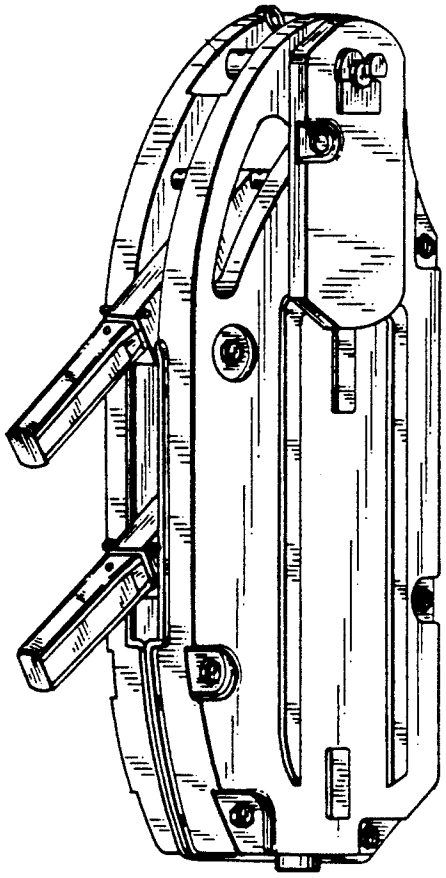

FIG. 1

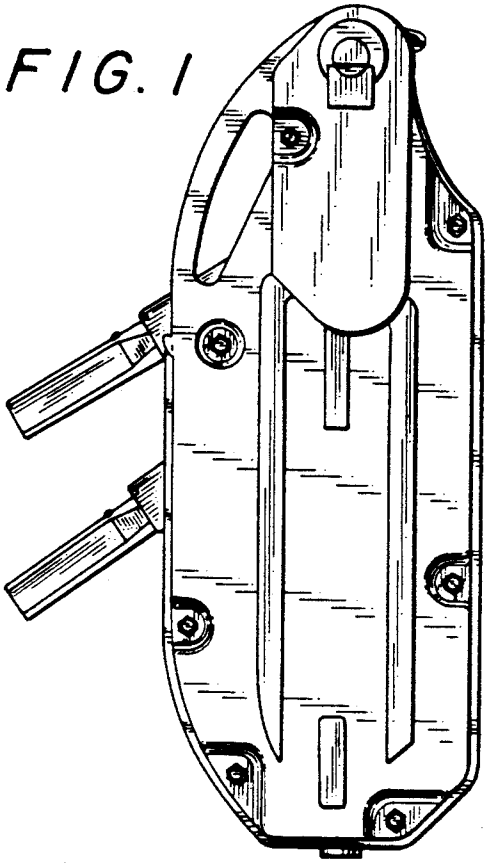

FIG. 2

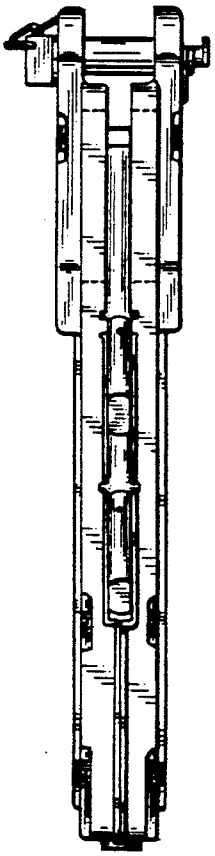

FIG. 3

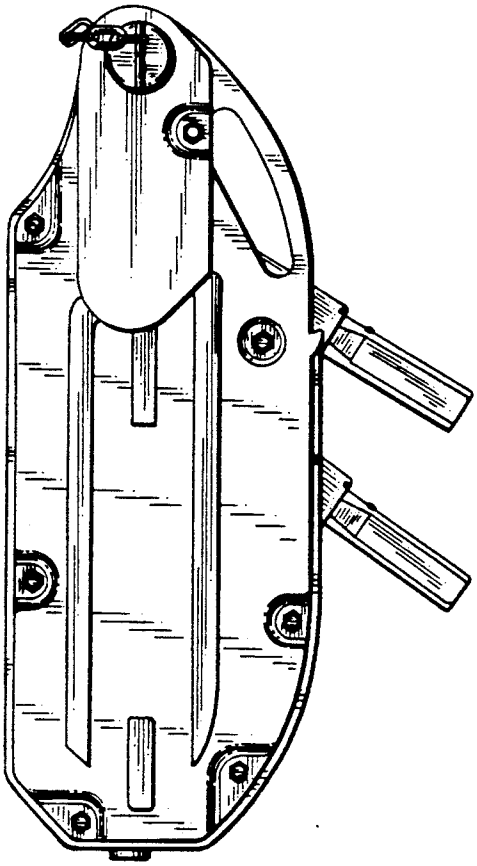

FIG. 4

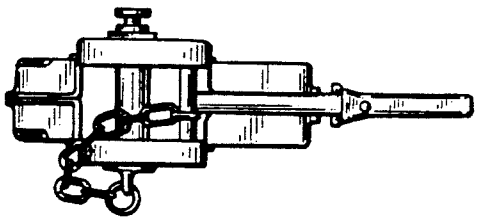

FIG. 5

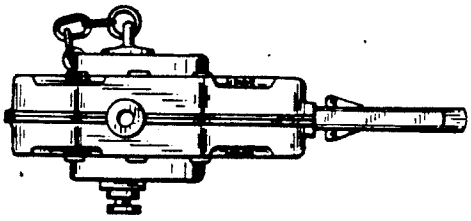

FIG. 6

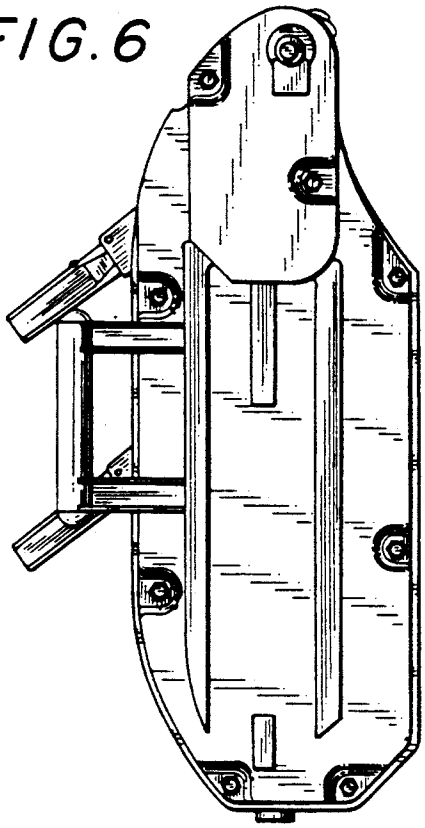

FIG. 7

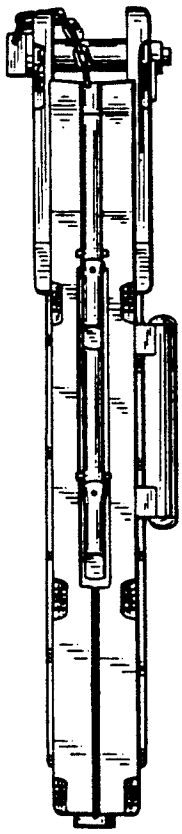

FIG. 8

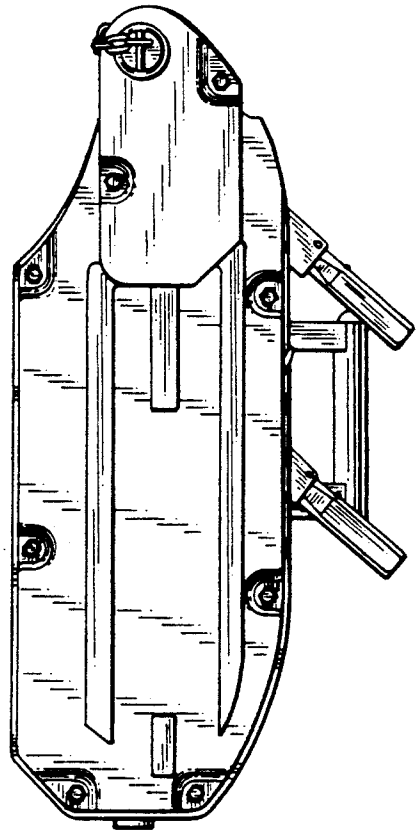

FIG. 9

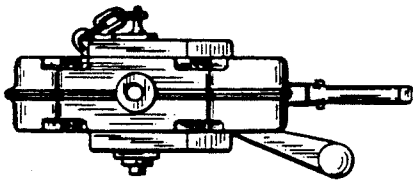

FIG. 10

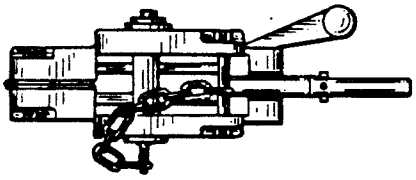

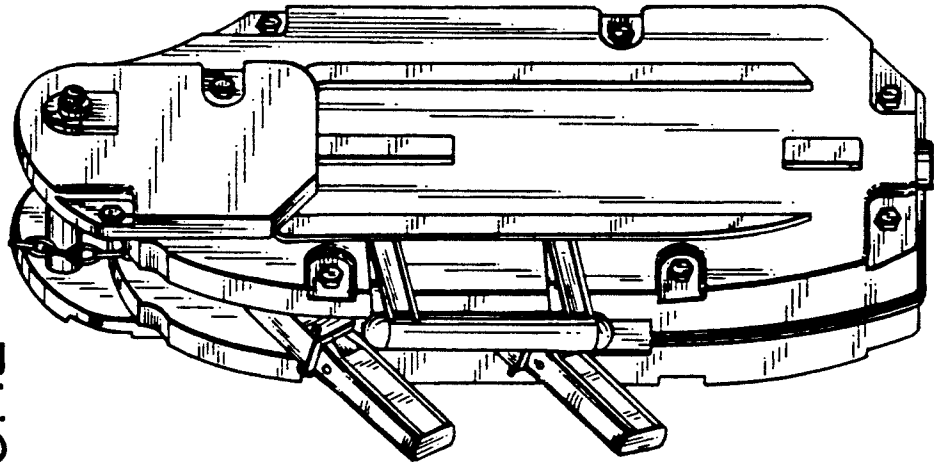

FIG. 12

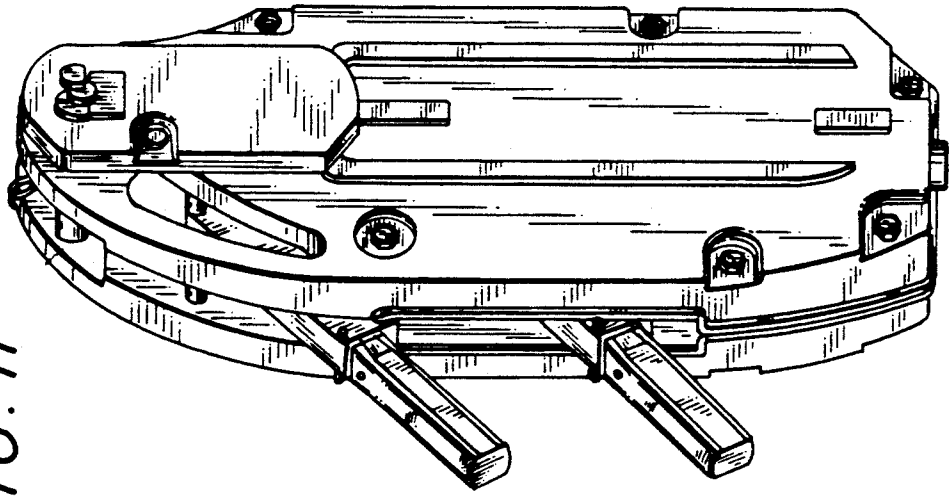

FIG. 11