P. A. HOUGHTALING.

CURTAIN FIXTURE.

APPLICATION FILED APR. 15, 1905.

898,894. Patented Sept. 15, 1908.

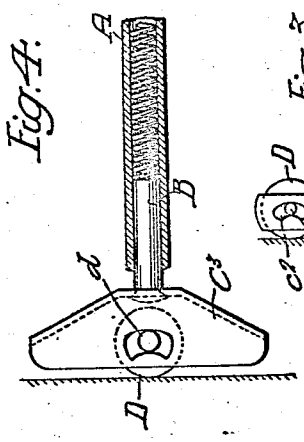

Fig. 4.

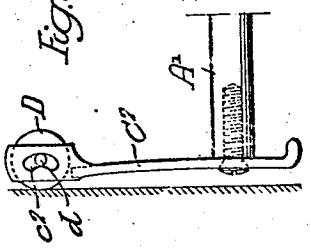

Fig. 3.

Fig. 2.

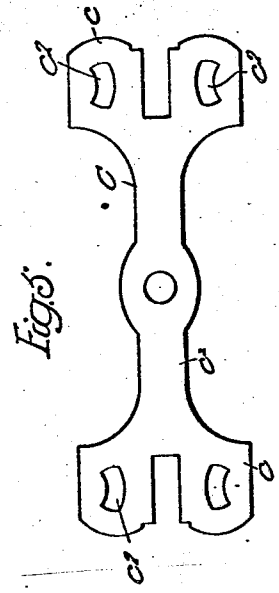

Fig. 5.

Fig. 6.

Fig. 1.

Witnesses:
A. P. Howell
Thos. R. Heath

Inventor
Paul A. Houghtaling.
by his Attorneys:
Howson & Howson.

THE NORRIS PETERS CO., WASHINGTON, D. C.

UNITED STATES PATENT OFFICE.

PAUL A. HOUGHTALING, OF RIVERTON, NEW JERSEY, ASSIGNOR TO THE CURTAIN SUPPLY COMPANY, OF NEWARK, NEW JERSEY, A CORPORATION OF NEW JERSEY.

CURTAIN-FIXTURE.

No. 898,894. Specification of Letters Patent. Patented Sept. 15, 1908.

Application filed April 15, 1905. Serial No. 255,765.

To all whom it may concern:

Be it known that I, PAUL A. HOUGHTALING, a citizen of the United States, residing in Riverton, New Jersey, have invented certain Improvements in Curtain-Fixtures, of which the following is a specification.

My invention relates to an improved device for frictionally holding a shade or curtain in a given position against the tendency of its spring roller to raise or roll it up.

More particularly the invention has to do with that particular type of curtain structures in which the lower end of the curtain is provided with friction devices normally held by means of outwardly acting springs in engagement with the bottoms of the grooves of the window frame in which the curtain operates.

One object of my invention is to provide a relatively simple and inexpensive structure applicable to the lower portion of a curtain for automatically holding the same in any given position against the action of its spring roller; it being also desired that the device shall be of such a nature as will serve to prevent its unauthorized removal from its normal position in the grooves of a window frame. These objects I attain as hereinafter set forth, reference being had to the accompanying drawings, in which:—

Figure 1, is an elevation, partly in section, of a portion of a curtain equipped with one form of my device; Fig. 2, is a side elevation similar to that of Fig. 1, showing a second form of my device in which the necessity for the springs in the curtain rod is obviated; Fig. 3, is a side elevation of a form of my invention designed to act upon the same principle as that of Fig. 2, in which, however, each head on the curtain rod is provided with but a single roller for engagement with the bottom of the groove of a window frame; Fig. 4, is an elevation, partly in section, of a fourth form of my invention of the general type shown in Fig. 1, but having heads for the curtain rod which are provided with but a single roller or wheel; Fig. 5, is a plan view of a stamped blank from which may be formed the head or box attached to the spring-actuated rods, and Fig. 6, is a plan view of a slightly modified form of the stamped blanks from which the roller-carrying box or head may be constructed.

The curtain fixture forming the subject of my invention is intended to act to retain a curtain or shade in any given position against the action of its spring roller by means of a roller or rollers journaled in a head or box, either fixed directly to the curtain rod or to a spring actuated rod guided by the curtain rod. The bearings for the spindles of the rollers are so constructed that a slight upward movement of the curtain causes revolution of the rollers by reason of their engagement with the grooves of the window frame thereby causing bodily movement of said roller or rollers relatively to the heads or boxes in which they are carried and that in such a direction that said heads are forced away from the bottoms of the grooves. As a result of such movement, the spring or springs acting on the heads or boxes become compressed and sufficient friction is exerted by the rollers or wheels upon the bottom of the grooves of the window frame to hold the shade in a desired position against the action of its spring roller.

Referring to Fig. 1 of the drawings herewith, A is a tubular curtain rod carried by or adjacent to the lower edge of the curtain, and in each end of said rod is a spring actuated rod B having attached to it the head or box C. The spring for the rod B is shown at *b* and the head may, if desired, be formed of a stamping of sheet metal and may be given any of a number of forms, such—for example—as are shown in Figs. 1, 5, and 6. In any case, however, in this form of my device I so proportion the structure that it extends both above and below the spring actuated rod B and its side portions *c* are formed or bent so as to be substantially parallel to each other and at right angles to the connecting portion *c'*, to which is screwed or otherwise attached said rod B. At or adjacent to the ends of each head are carried rollers or wheels D for engagement with the grooves of the window frame, and these rollers are made with spindles designed to enter openings c^2 in the side members *c* of the head, which openings are preferably made of elongated form either inclined to the line of the head or curved in the arc of a circle, whose center would lie in the line of tangency between the roller and the bottom of the groove of the window frame. As a result of this construction, it will be seen that under operating conditions if the curtain be moved by hand from one position to another, the rollers D will revolve owing to their en-

gagement with the bottoms of the grooves of the window frame. As a result of this it will be seen that their spindles will roll in the elongated grooves c^2 of the heads C into a position at one end of said openings, and, consequently, force the said heads A bodily away from the bottoms of the grooves or guideways of the window frame thereby compressing the spring b to such an extent that when the curtain is released, said spring presses the rollers D against the bottoms of the grooves with sufficient force to prevent further movement of the shade under the action of its spring roller. It will thus be seen that while the curtain may always be easily moved by hand and that without requiring the use or operation of pinch handles or pendants, it will, nevertheless, remain in any given position as soon as released.

As shown in Fig. 6, the elongated openings in the ends of the piece of metal forming the box C may, instead of being curved as shown at c^2, be merely inclined to the line of the head as indicated at c^4; the result being in any case that under the upward pull of the spring roller the spindles d of the wheels or rollers D are brought into a part of said openings so that the heads C are moved away from the bottoms of the grooves of the window frame, the spring b being compressed sufficiently to prevent further revolution of said rollers and consequent motion of the curtain. Again, when the curtain is moved downwardly by hand, revolution of the rollers D brings their spindles into such position in the opening c^2 or c^4 that compression of the spring b is relieved and the movement of the shade thereby facilitated.

In Fig. 2, I have shown a form of my device in which the curtain rod may be employed without the rods B or their actuating springs. In this case the head or box C′ is made of spring material so that its connecting portion c', shown in dotted lines, and parts of its side members c, take the place of the spring b while being connected directly to the end of the curtain rod A′ by means of a screw a. As before, the ends of the head or box are provided with elongated openings so placed that different parts of them are at different distances from the bottom of the groove in the window frame. The heads or boxes on the curtain rod are preferably as shown in Figs. 1 and 2, of an elongated form so as to render difficult their unauthorized removal from the grooves of the window frame, there being a roller D at each end of each head. I may, however, if desired, utilize that form of the device shown in Fig. 3, in which a head C^3 is screwed directly to the end of a curtain rod A′, making said head, as in the case shown in Fig. 2 of spring metal. It, however, is so placed that it extends farther on one side of the curtain rod than on the other, and at the end of this extended portion is placed a single roller D, which, however, is provided with a spindle and a bearing therefor of the same general construction as shown in the previous figures.

If desired, that form of my invention shown in Fig. 4 may be substituted for that illustrated in the previous figures, and this, like the construction shown in Fig. 1, is provided with a spring actuated rod B having a hollow head or box C^3, at the central portion of which is a single roller D. This roller is supported in an elongated curved bearing, as in Fig. 1, while the ends of the head are extended for a suitable distance on both sides of the roller so as to serve the same function as that performed by the elongated heads of the other figures.

I claim as my invention:

1. The combination with a frame having guideways, of a curtain, a rod carried thereby, a head on said rod, and a friction roller for said head, the head having segmental bearings for said rollers to permit variation of the distance between the head and the guideways, the respective ends of the bearing being the portions nearest the guide-ways substantially as described.

2. The combination with a frame having guideways, of a curtain, a rod carried thereby, a head on said rod, and a friction roller for said head, said rollers having spindles acting in elongated bearings in the head, and said bearings having different portions at different distances from the guideways of the frame, the respective ends of the bearings being the portions nearest the guideways substantially as described.

3. The combination with a curtain, of a rod carried thereby, a yieldable head on the rod, friction rollers carried by the head adjacent opposite ends thereof, the said head having elongated bearings for said rollers, and the said bearings being similarly curved relative to the head.

4. The combination with a curtain, of a rod carried thereby, a yieldable head on the rod, a friction roller carried by the head, said roller having a bearing permitting it to be movable in a circular arc relative to said head, the respective ends of the bearing being the portions nearest the guide-ways.

5. The combination with a curtain, of a rod carried thereby, a resilient head on the rod, friction rollers carried by the head, said head having an elongated bearing curved in a circular arc, for said roller.

6. The combination with a curtain, of a rod therefor, yieldable heads thereon having elongated bearings curved in circular arcs, and a roller for said heads having portions movable in the bearings whereby the rollers may adjust themselves according to the yielding of the heads.

7. The combination with a curtain, of a rod, a head of sheet material thereon having re-

silient portions and side members connected to said resilient portions, elongated bearings in said latter portions, with rollers having spindles acting in the bearings and free to move bodily relatively to said head, substantially as described.

In testimony whereof, I have signed my name to this specification, in the presence of two subscribing witnesses.

PAUL A. HOUGHTALING.

Witnesses:
WM. E. SHUPE,
JOS. H. KLEIN.