March 4, 1947. J. B. SEBOK 2,416,851

AIR CLEANER

Filed Jan. 2, 1943

Fig. 1

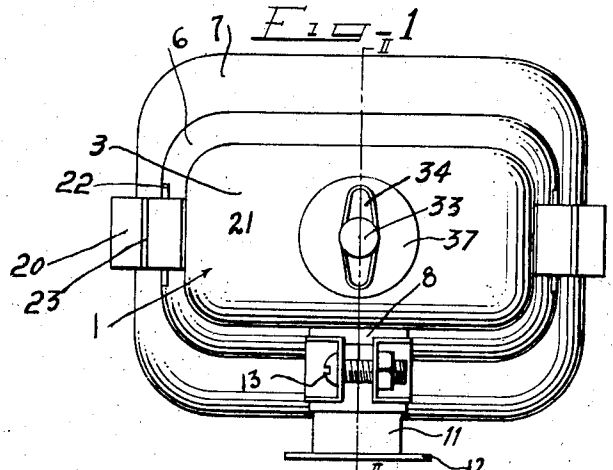

Fig. 2

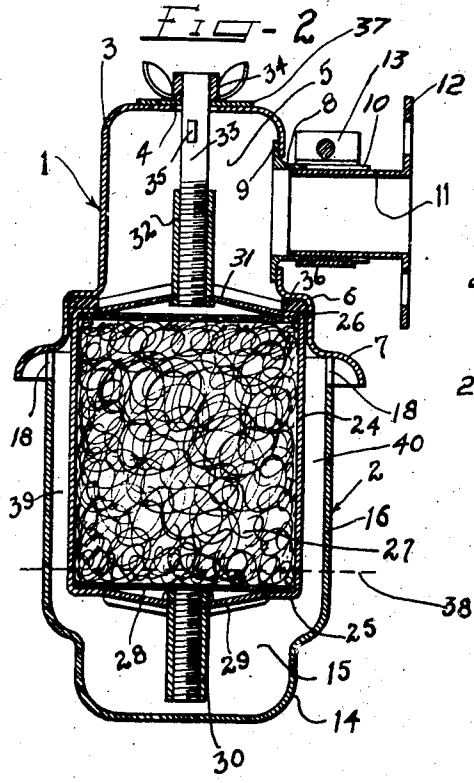

Fig. 3

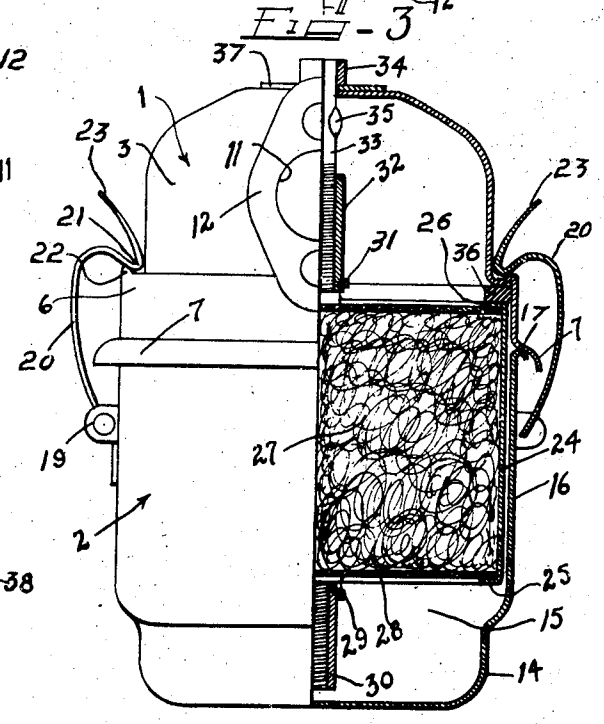

Inventor

Joseph B. Sebok.

by Charlesworth Fitch

Patented Mar. 4, 1947

2,416,851

UNITED STATES PATENT OFFICE

2,416,851

AIR CLEANER

Joseph B. Sebok, Detroit, Mich., assignor to Houdaille-Hershey Corporation, Detroit, Mich., a corporation of Michigan

Application January 2, 1943, Serial No. 471,135

6 Claims. (Cl. 183—15)

1

This invention relates to improvements in a liquid bath air cleaner of a type connected to the intake of a mechanism requiring a supply of clean air, the invention being highly desirable for use in connection with an air compressor, although the invention might be used upon an internal combustion engine and other apparatus requiring an air supply for proper operation, as will be apparent to one skilled in the art.

An air cleaner used in connection with the intake of an air compressor, especially when that air compressor is mounted on a vehicle such as an automotive vehicle of the character of a large truck or bus, or on a railroad train, is subject to considerable vibration and jarring. It is imperative, therefore, that if any of the interior portions of the air cleaner should become loosened from their respective moorings, that the supply of air to the compressor is not cut off, and it is desirable that the air cleaner continue to operate at a high degree of efficiency even in such an event. Further, it is desirable to have an air cleaner which may be very quickly and easily serviced when necessary, which permits various adjustments and changes in the component parts of the cleaner as may be needed during servicing, which occupies a small space, and which is highly efficient in operation.

With the foregoing in mind, it is an important object of the instant invention to provide a highly efficient liquid bath air cleaner of extremely small size and compact form and which does not possess the disadvantages of air cleaners used heretofore in similar locations.

Another object of this invention resides in the provision of a liquid bath air cleaner wherein the interior filter element may be completely reversed in its position without altering the operation of the cleaner.

A further object of the invention is the provision of an air cleaner of the liquid bath type, containing a filter mass therein which may readily be removed from the cleaner for servicing, without disturbing the connection of the cleaner with the apparatus being supplied with clean air.

Another object of the invention resides in the provision of a liquid bath air cleaner containing a filter element, and which element is so constructed as to be completely invertible and is easily securable in inverted position as in normal position.

It is also a feature of this invention to provide an air cleaner of the liquid bath type containing a filter element so constructed as to prevent any material loss of functioning of the cleaner in the

2

event the filter element becomes loosened from its mooring in the cleaner and is totally freed from all connections with other parts of the cleaner. Still a further object of the invention resides in the provision of a liquid bath air cleaner containing a filter element having substantially the same construction at both ends thereof, so that either end of the filter element may be engaged with an anchoring or supporting means, and the other end of the filter will prevent falling of the filter any more than a negligible degree into the liquid sump in the event the filter becomes loosened from its anchoring means, so that the efficiency of the cleaner in such event is impaired to only a negligible amount, if at all.

Also an object of the invention is the provision of a liquid bath air cleaner having an adjustable outlet connection by which the cleaner may be connected with an air intake element of various shapes or sizes and various distances from the cleaner.

Still a further object of the invention is the provision of a liquid bath air cleaner including a casing embodying separable sections, one of which sections is provided with novel and protected inlet means.

While some of the more salient features, characteristics and advantages of the instant invention have been above pointed out, others will become apparent from the following disclosure, taken in conjunction with the accompanying drawing, in which:

Figure 1 is a top plan view of an air cleaner embodying principles of the instant invention;

Figure 2 is a transverse vertical sectional view through the cleaner of Figure 1, taken substantially as indicated by the section line II—II of Figure 1, looking in the direction of the arrows; and

Figure 3 is a part side elevational, part vertical sectional view of the construction seen in Figures 1 and 2.

As shown on the drawings:

The illustrated embodiment of the instant invention is an air cleaner substantially rectangular in cross section, with the inlet openings disposed along the longer sides of the casing. The casing includes separable sections, an upper section generally indicated by numeral 1, and a lower section separable therefrom and generally indicated by numeral 2.

The upper casing section 1 includes a hollow cover portion 3 closed except for a bolt accommodating aperture 4 in the top central portion thereof. This cover portion 3 forms an interior

chamber 5 for clean air prior to its exit from the cleaner. Below the chamber 5, the upper casing section is stepped outwardly to form an interior socket as indicated at 6 to accommodate both a gasket and the upper portion of the filter element to be later described. Below the socket portion 6 the upper section is flared outwardly and downwardly as indicated at 7 to form a hood which covers the junction point between the lower and the upper casing sections, and also shield the inlet opening. This hood not only protects the junction and the inlet openings from the entrance of water, but also keeps out heavy dirt and debris which might either plug the inlet openings to an undesirable extent or ultimately cause a misfit between the casing sections and permit air to eke through the joint between the sections.

An outlet arrangement communicates with the clean air chamber 5 through one of the longer sides of the cover portion 3 of the upper casing section. This outlet arrangement includes an outlet conduit 8 extending through the casing section wall and being flanged as indicated at 9 on its inner end for attachment to the interior of the casing wall by brazing, spot welding, or the equivalent. This outlet conduit is provided with a shank which is split in one or more places as indicated at 10. Telescopically associated with the conduit 8 is another conduit 11, and this conduit is outwardly flanged as at 12 for attachment to an air compressor intake or the intake for some other apparatus requiring a supply of air for proper operation. The conduit 11 may be moved in or out relatively to the conduit 8, or rotated relatively to this conduit until a desired position of adjustment for proper attachment to the intake of the device with which the cleaner is associated is reached. When the adjustment has been made satisfactorily, the split portion 10 of the conduit 8 is clamped tightly around the conduit 11 by a suitable pipe clamp 13 or equivalent means, such connection being air-tight, of course. With such an adjustable outlet, the cleaner may be spaced at varying distances away from the intake conduit, and the intake conduit may be at various angles to the cleaner, etc., without necessitating any additional equipment for such variances in connections.

The lower casing section 2 is generally of cup shape and includes a reduced bottom portion 14 housing the deeper part of a liquid sump 15, and a substantially straight side wall portion extending thereabove into contact with the upper casing section beneath the hood 7. Except for the space for the air inlet opening, the upper margin of the wall part 16 is preferably rolled outwardly as indicated at 17 in Figure 3 in substantial conformity to the curvature of the hood 7, so that an air-tight engagement between these parts may readily be established. Inlet openings 18 for dirty air are provided by removing a portion of the upper margin of the part 16 of the lower casing, as seen clearly in Figure 2, these inlet openings occurring around the longer sides of the lower casing section. In the region of the inlet openings 18—18, the hood 7 is flared outwardly to a greater extent than where this hood contacts the rolled margin 17, so as not to impede the free entrance of a suitable quantity of air. In order to join the two casing sections together, clamps are provided at opposite ends of the casing. Each of these clamps is pivoted to a suitable bracket 13 on the wall of the lower casing section, and includes a resilient body portion 20 curved in the upper part thereof to provide a bight 21 for engagement behind a pressed rib 22 on the upper casing section at the corner of the socket part 6. By pressing down on the free end portions 23—23 of the clamps, the bights 21—21 may be sprung out from behind the ribs 22—22 and the clamps will pivot downwardly, thus permitting the lower section to be dropped away from the upper section. It is a simple expedient to push the lower casing section in position and spring the clamps into engagement with the upper casing section to again unite the parts for operation.

A filter element is disposed inside the casing, and this element comprises an imperforate tubular partition 24 having the opposite ends thereof turned inwardly as indicated at 25 at the bottom and 26 at the top. Within this partition 24 a filter mass 27 is disposed, which substantially fills the interior of the partition and which may be a mass of crimped wavy wire, vegetable fibre, curled cattle-tail hair, or any other suitable filter medium. At each end of the filter holding partition 24, a strip of hardware cloth 28 or the equivalent is used to hold the filter mass in position. At the lower end of the filter element, a yoke 29 is formed which comprises a pair of opposed legs emanating from the turned in marginal portion 25, and extending to a central portion which surrounds a tubular nut 30 extending outwardly from the yoke. A similar construction is found at the opposite or upper end of the filter element and includes a yoke 31 and a like tubular nut 32 similarly held in place by the yoke. Each yoke 29 and 31 is made as narrow as possible consistent with the central portion thereof circumscribing the tubular nut 30 or 32. The yoke is preferably engaged within a groove in the nut so that a lock fit is established preventing the respective nut from turning relative to its yoke.

To hold the filter element in position, a bolt 33 extends through the opening 4 of the cover portion 3 of the casing. Outside the casing this bolt has a thumb nut 34 or the equivalent firmly affixed thereto. Inside the casing, the bolt has a pinched or swaged portion 35 which projects outwardly sufficiently to prevent withdrawal of the bolt through the aperture 4. The bolt, as seen in Figures 2 and 3, is threadedly engaged in the upper tubular nut 32 of the filter element. By tightening this engagement by turning of the thumb nut 34, the filter element is drawn upwardly until the turned margin 26 of the partition seats firmly against a gasket 36 carried in the socket 6, and the upper portion of the partition 24 is also seated within the socket structure. The lowermost tubular nut 30 will therefore be elevated a short distance above the bottom of the lower casing section, and the seal between the filter element and the gasket 36 will, of course, be air tight. The aperture 4 in the cover portion of the casing may be closed intimately around the bolt by the use of a suitable washer 37.

When the cleaner is ready for use, the upper casing section and filter element may be assembled as seen in Figures 2 and 3, and the lower casing section is provided with cleansing liquid in the sump 15. This cleansing liquid may be oil or any other suitable cleansing medium, and a sufficient quantity is placed in the sump 15 so that when the lower casing section is joined to the upper by virtue of the clamps 20—20, the cleansing liquid will rise to a normal level indicated by the dotted line 38 in Figure 2. This liquid level is sufficiently high to initially seal off inlet passages 39 and 40 for entering air. These passages extend downwardly from the inlet open-

ings 18—18 between the partition 24 of the filter element and the adjacent wall of the lower casing section. With reference to Figures 2 and 3, it will be seen that the filter element partition has a long dimension substantially equal to the casing, but in the vicinity of the inlet openings 18—18 the partition 24 is of less width than the casing to provide the air passageways 39 and 40 on opposite sides. Incoming air passes through the inlet openings 18—18, descends the passages 39 and 40, breaks the seal-off sump liquid by forcing a portion of this liquid into the lower part of the filter mass 27, and then the air passes through the remainder of the filter mass during which time the extremely fine particles of foreign matter are removed from the air as well as any entrained liquid. The air then in clean substantial'y dry form enters the chamber 5 and passes through the outlet arrangement into the apparatus with which the cleaner is associated. Dirt removed from the air will collect in the bottom of the liquid sump 15.

When it is desired to service the cleaner, that is, remove the accumulated dirt and replace the cleansing liquid, if necessary, it is a simple expedient to release the clamps 20—20 and drop off the lower casing section 2. This cup-like casing section may then be easily and thoroughly cleaned.

It will be especially noted that in order to remove the accumulated dirt and replenish the cleansing liquid, only the lower casing section 2 need be removed. The filter unit remains suspended from the upper casing section. If it is desired to remove the filter element, it is a simple expedient to loosen the thumb nut 34 and bolt 33 and drop the filter element free from the upper casing section. It will be noted that with the removal of the filter element the upper casing section, together with the outlet arrangement, still may remain fixed to the intake of the apparatus with which the air cleaner is associated.

If, for any reason, it becomes desirable to reverse the filter element, it is a simple expedient merely to turn it over and engage the bolt 33 with the tubular nut 30 rather than with the tubular nut 32, and the structure will function in identically the same way as it did in the previous position.

An important feature of the filter element construction is apparent from the disclosure in Figures 2 and 3. If, with the air cleaner completely assembled, the filter element should become free from the bolt 33 for some reason or another, the element would drop only until the tubular nut 30 contacted the bottom of the lower casing section, a relatively negligible distance. The filter element would then be supported on the bottom of the casing, with the intake air passages remaining open, and with the upper portion of the filter element still within the socket construction 6 on the upper casing section. This fit of the filter element in the socket construction is sufficiently tight so that only a relatively small amount of incoming air would escape around the filter element into the chamber 5. Most of the air would still follow the desired course of travel through the passages 39 and 40 and upwardly through the filter mass, so that even though the filter element was perfectly free from attachment within the cleaner, the cleaner would still operate with a satisfactory efficiency.

From the foregoing, it is apparent that I have provided a novel liquid bath air cleaner which may be made extremely small and compact for air compressor use, which includes a filter element that may be reversible, and a filter element that protects the cleaner against cessation of operation in the event the element becomes free from its fastenings, permitting the cleaner to operate with satisfactory efficiency even though the filter element does become entirely loosened. It will also be noted that the cleaner has an adjustable outlet which permits the cleaner to be connected to various forms of fastenings, as well at various angles to the cleaner and various distances from the cleaner without the use or need of any extra parts. In addition, it will be seen that the cleaner is well protected with a hood all around, not only over the air inlet but also over the joint between the casing sections, and that both the filter element and lower casing section may readily be removed from the filter, but in addition the lower casing section may be removed and still leave the filter element in place if so desired. Further, the entire structure is extremely economical to manufacture and operate.

It will, of course, be understood that various details of construction may be varied through a wide range without departing from the principles of this invention and it is, therefore, not the purpose to limit the patent granted hereon otherwise than necessitated by the scope of the appended claims.

I claim as my invention:

1. In an air cleaner, a casing having spaced inlet and outlet openings and shaped to define a liquid sump, a removable filter element in said casing in the path of air traveling from the inlet to the outlet, means to hold said filter element in position within the casing, and means projecting from said filter element to limit the movement of the element in the event the element becomes free, the last said means also being connectable to the first said means with the filter element in inverted position, said filter element being arranged to function with equal efficiency in either position.

2. In an air cleaner, a casing having spaced inlet and outlet openings and shaped to define a liquid sump, a removable filter element in said casing in the path of air traveling from the inlet to the outlet, similar connecting means projecting from each end of said filter element, and means to engage either of said connecting means to hold the filter element in position in said casing with either end up, said filter element being arranged to function with equal efficiency in either position.

3. In an air cleaner, a casing having spaced inlet and outlet openings, a removable filter element in said casing in the path of air traveling from the inlet to the outlet, a tubular nut projecting from each end of said filter element, and a bolt extending from the top of the casing for engagement with either of said tubular nuts depending upon which end of said filter element is uppermost, said filter element being arranged to function with equal efficiency in either position.

4. In an air cleaner, a casing having spaced inlet and outlet openings, a removable filter element in said casing in the path of air traveling through the casing, said filter element including an open-ended tubular partition, a filter mass within said partition, a yoke at each end of said partition, a tubular nut held by each yoke, and a bolt in said casing engageable with either of said tubular nuts, said filter element being arranged to function with equal efficiency with either nut engaged with said bolt.

5. In an air cleaner, a casing having spaced inlet and outlet openings and shaped to define a liquid sump, a removable filter element in said casing above said sump in the path of air traveling from the inlet to the outlet, a tubular nut projecting from each end of said filter element, and a bolt extending from the top of the casing for engagement with either of said tubular nuts depending upon which end of said filter element is uppermost, said liquid sump being at the bottom of said casing and the nut not engaged with said bolt extending into said sump to a point in proximity to the sump bottom, to prevent a dropping of the filter in the event the engaged nut becomes loosened.

6. In an air cleaner, a casing having spaced inlet and outlet openings and shaped to define a liquid sump at the bottom thereof, said casing being shaped to provide an interior socket formation in an upper part, a filter element telescoped in said socket formation inside said casing, holding means to retain said element in position, and means projecting from said element into said sump a distance sufficient to prevent said element dropping out of said socket formation in the event said element becomes released from said holding means.

JOSEPH B. SEBOK.

REFERENCES CITED

The following references are of record in the file of this patent:

UNITED STATES PATENTS

Number	Name	Date
1,722,689	Taecker	July 30, 1929
1,497,367	Frese	June 10, 1924
1,881,049	Garner et al.	Oct. 4, 1932
1,951,384	Zander	Mar. 20, 1934
1,960,260	Acton	May 29, 1934
2,304,829	Kamrath	Dec. 15, 1942
2,018,131	Kamrath	Oct. 22, 1935
1,747,882	Prazmo	Feb. 18, 1930
1,426,177	Garner	Aug. 15, 1922

FOREIGN PATENTS

Number	Country	Date
843,294	France	Mar. 20, 1939