April 15, 1941. J. FRANCOTTE 2,238,691

HORIZONTALLY SLIDING SASH WINDOW FRAME

Filed Sept. 11, 1937 2 Sheets-Sheet 1

Fig.1

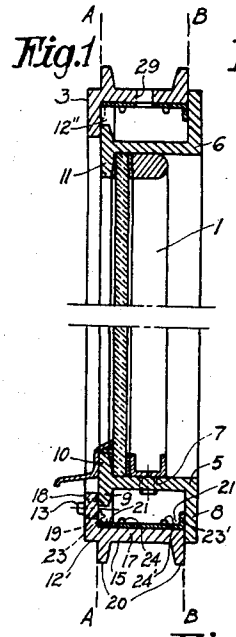

Fig.2

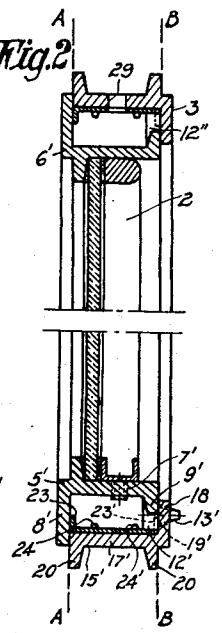

Fig.3

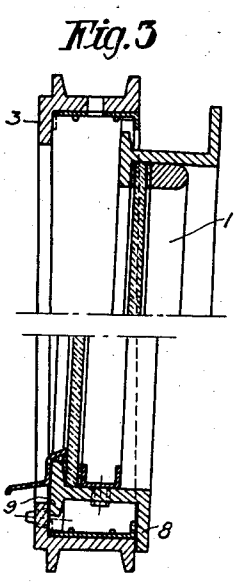

Fig.4

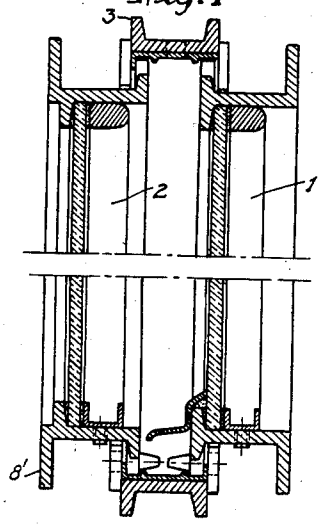

Fig.5

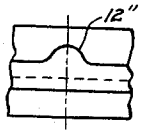

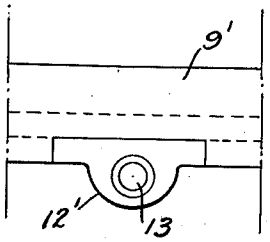

Fig.6.

INVENTOR:
JOSEPH FRANCOTTE
PER J. Govern
ATTORNEY.

April 15, 1941. J. FRANCOTTE 2,238,691

HORIZONTALLY SLIDING SASH WINDOW FRAME

Filed Sept. 11, 1937 2 Sheets-Sheet 2

Fig. 7

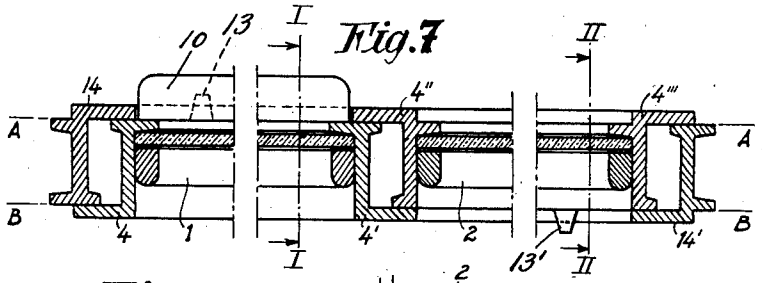

Fig. 8

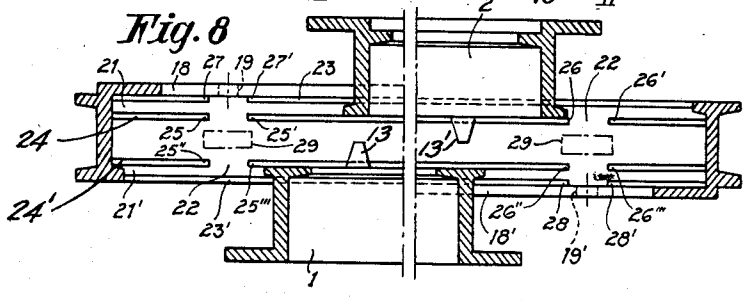

Fig. 9

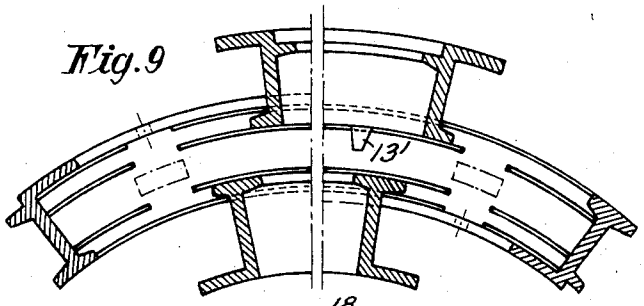

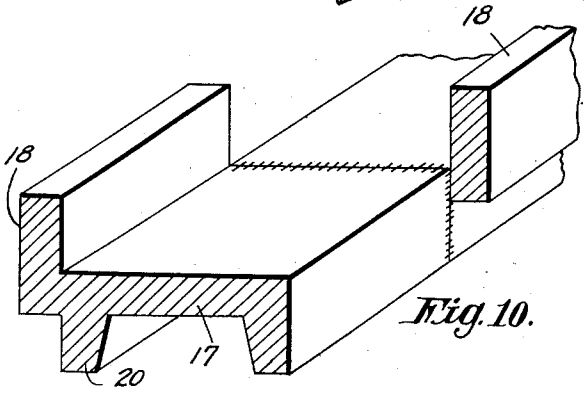

Fig. 10.

INVENTOR:
JOSEPH FRANCOTTE
PER: J. Levers
ATTORNEY.

Patented Apr. 15, 1941

2,238,691

UNITED STATES PATENT OFFICE

2,238,691

HORIZONTALLY SLIDING SASH WINDOW FRAME

Joseph Francotte, Merxem, near Antwerp, Belgium, assignor to Brevets Francotte pour Chassis de Fenêtres Métalliques, Société anonyme, en abrégé "Francochass," Luxemburg, Luxemburg

Application September 11, 1937, Serial No. 163,384
In Belgium October 17, 1936

10 Claims. (Cl. 189—64)

Most of the horizontally sliding sash frames for doors and windows comprise a number of sashes, generally two, which are capable of sliding while remaining always in the same plane. For opening a window, one of the sashes is then caused to slide behind the other. When the window or the door is closed, the sashes, contrary to what is the case with hinged panels, for instance, are lying in different planes.

However, there have also been proposed frames in which the sashes lie substantially in the same plane when the window is closed. For making these sashes slide, it is then necessary to deviate one of them in a sliding plane generally parallel to the plane of the closed window.

It will be said hereafter that the sashes are "substantially" in the same plane, when the plane of one sash is sufficiently close to that of the other one, so that they cannot slide the one behind the other before having first displaced at least one of the sashes. This plane will be designated as the "closing plane."

The object of the present invention is a metal frame in which the sliding plane of one of the sashes is at one side, and the sliding plane of the other sash at the other side of the closing plane.

The invention relates also to means permitting the sashes to be brought in these two planes, means which consist in causing first each of the sashes to swing, just like a shutter swinging around its base, one of the sashes swinging inwards and the other outwards, the two sashes being then erected by pushing or pulling one of the sashes towards the interior and the other towards the exterior, so as to make both sashes swing around their upper edge.

The invention relates more particularly to a sash frame comprising at least two sashes and a frame, all constructed by means of section irons having two abutment sides, these section irons being interengaged with each other, in such a manner that,

(*a*) in the closed position, the surfaces abutting or coming into contact with the frame and the sashes are all contained in two planes (designated hereafter as the abutment or clamping planes); these planes are preferably parallel and situated each at the same distance from the vertical longitudinal middle plane of the whole frame structure;

(*b*) in the open position, the surfaces abutting or entering into contact with the sashes are offset, either to the left or to the right with respect to the two abutment or clamping planes, according to the sash considered; this offset position is preferably parallel and at the same distance from said two planes, in such a manner that the sashes may slide freely the one behind the other, without any friction between the surfaces entering into contact in the closed position.

Finally, the invention relates to different details of construction, which will be described hereafter with reference to the accompanying drawings, which illustrate, by way of example, one form of embodiment of the invention.

In the drawings,

Fig. 1 is a transverse vertical section on the line 1—1 of Fig. 7 through the first sash, shown in the closed position;

Fig. 2 is a section on line 2—2 of Fig. 7 through the second sash when in the closed position;

Fig. 3 is a section through the first sash in half open position, in the manner of a swinging shutter;

Fig. 4 is a transverse section through the whole of the two sashes in the sliding position;

Figs. 5 and 6 are elevations of sliding means;

Fig. 7 is a horizontal section through the closed window;

Fig. 8 is a horizontal section through the open window;

Fig. 9 is a horizontal section through an arched window;

Fig. 10 is a perspective view of a detail.

The frame illustrated in the drawings is formed with two sashes 1, 2 and a housing or window 3. These elements are constructed entirely of section irons having two abutment faces. Figs. 1, 2 and 7, which illustrate the window in the closed position, make it clear that, in this position, it is impossible that the sashes can slide. For permitting the sliding motion, it is first necessary to offset the same so as to bring them in their respective sliding planes (see Fig. 4). It is also observed that all the abutment faces in mutual contact are all contained in two planes A—A, B—B, called clamping or closing planes.

The frame of each sash comprises two uprights 4, 4', 4'', 4''', a lower transverse member 5, 5', and an upper transverse member 6, 6'. The uprights 4, 4', 4'', 4''' are shaped as illustrated in Fig. 7, so as to enable the sashes to be engaged and clamped the one against the other. In the closed position, all the abutting surfaces of these uprights are lying in the closing planes A—A, B—B (see Fig. 7), said planes being at the same distance from the longitudinal vertical middle plane of the window. Each lower member 5, 5' comprises a section iron having a web 7, 7', a

main vertical downward flange 8, 8', and an auxiliary downward flange 9, 9' (see Figs. 1, 2, 3 and 4). The inner faces of the flanges 8, 8' constitute abutment surfaces and are contained in the planes A—A, B—B in the closed position (see Figs. 1 and 2). The auxiliary flanges 9, 9' are generally of smaller dimensions than the vertical flanges 8, 8'. The webs 7, 7' are parallel to the webs 17, 17' of the transverse members 15, 15' of the frame described hereafter.

It may be seen that in the closed position the abutment surfaces of the flanges 9, 8' are in the closing plane A—A, and the abutment surfaces of the flanges 9', 8, in the closing plane B—B.

The upper frame members 6, 6' are preferably but not necessarily identical to the transverse members 5, 5', but they are symmetrically arranged with respect to the latter and to the horizontal middle plane of the frame.

The frames of the sashes are completed by flanges 10 and 11 provided for securing the glass panel, the rejection of rain, the collecting and evacuation of condensation water, the fixing of handles or manipulation hooks and the like.

The lower transverse member 5, 5' of each sash comprises, moreover, one or more guide elements. These elements are provided for guiding the sashes, during their sliding motion, in guide-ways described hereafter, and they are also intended for supporting the sashes in the frame. These guide elements may be constructed in different ways. In the example illustrated in the drawings, they are formed with runners 12' more particularly illustrated in Figs. 5 and 6. These guide elements are welded to the lower transverse member 5, 5' and they are preferably integral with the downward flanges 9, 9', and their outer surfaces are lying in the abutment plane of said flanges. When the sashes are in the closed position, the outer faces of the runners 12' of the sash 1 are thus lying in the clamping plane A—A, and the outer faces of the runners of the sash 2 are in the plane B—B.

Finally, the contact and abutment surfaces of the runners upon the frame are offset with respect to the vertical plane passing through the centre of gravity of each sash, in such a manner that, when the sashes are unlocked, they will automatically swing around their base, just like a shutter swinging around its pivots or hinges.

The guide elements are usefully provided with conical studs 13, 13', which may be engaged in holes 19, 19', provided in the flanges 18, of the lower transverse rail of the frame, to be described hereafter, and said studs are conveniently located, so that, during the closing manipulation of the sashes, the latter may be guided and accurately brought in the exact clamping position.

The upper sash members 6, 6' are also provided with guide elements 12'', similar and symmetrically arranged to the runners 12'. The upper runners 12'', however, are not provided with studs similar to the studs 13, 13'.

The frame has two uprights 14, 14', shaped as illustrated in Fig. 7. This section iron has two abutment faces which are lying in the closing planes A—A and B—B. The frame has also two transverse rails. The lower rail has a web 15, 15', and two upward vertical flanges 18, 18', identical to and parallel with each other, one of which extends from one end up to about the middle of the rail, and the other flange extends from the opposite end of the rail also to about the middle thereof.

The inner surfaces of each flange 18, 18' thus constitute abutment surfaces and are at right angles with the horizontal web 15, 15'. The inner surface of the flange 18 is in the closing plane A—A, and the inner surface of the web 18', in the plane B—B.

The rail has, moreover, two longitudinal ribs 20 at the underside, and the outer surface of one rib is in the plane A—A, while the outer surface of the other rib is in the plane B—B. For producing this lower transverse frame rail, use can be made of a special section iron, of U-shape and provided at the underside with ribs, the outer surface of one rib being in the same plane as the inner surface of one upward flange, and the outer surface of the other rib is in the same plane as the inner surface of the other upward flange. Then is removed, for instance by planing, one of the upward flanges over one half of the length of the rail, while the other upward flange is removed along the other half of the length of the rail.

Use can also be made of an angle iron having two ribs 20 underneath, the outer surface of one rib being at right angles to the horizontal flange 17, along the ridge thereof and opposite to the upward flange 18 of the angle iron; the outer face of the other rib is within the inner plane of the upward flange 18 of the angle iron. This section iron will then be cut and both sections will be united again by welding the horizontal flanges, one section having been turned 180°, in order to obtain the transverse rail such as described herebefore (see Fig. 10).

The lower transverse rail is provided with guiding means for the runners 12' during the sliding motion of the sashes. The shape of these guide elements may be varied. They may, for instance, be produced during the rolling of the iron or they may be integral with the section iron itself. However, the example illustrated in the drawings shows one form of embodiment, in which the guide elements are constituted by a separately fixed piece which, when the frame is made of iron, will be preferably made of copper or of any other non-oxydable material for preventing rust. These guide-ways are preferably spaced apart from each other as much as possible, for securing the most possible clearance between the frame and the sashes when the latter are sliding along each other; however, the width of the rails wil be held as small as possible.

In the embodiment illustrated in the drawings and particularly in Fig. 8, the two longitudinal guide-ways extend over the whole length of the rail web, and there are also provided two transverse guides 22, the latter being at right angles to the first guides and to the plane of the sash.

The longitudinal guide-ways 21, 21' are each formed with an inner vertical partition 23, 23' and an outer vertical partition 24, 24'. The grooves formed between these vertical partitions constitute the proper guide-ways 21—21'.

The inner partitions 24, 24' are interrupted at 25, 25', 26, 26', 25'', 25''', 26'', 26'''. The outer partition 24 is only interrupted at 27, 27', at the place where said partition is adjacent to a vertical flange 18, and the outer partition 24' is interrupted at 28, 28', also in a place where said partition is adjacent to the vertical flange 18, 18'. The interruptions 27, 25, 25'', on the one hand, and 27', 25', 25''', on the other hand, are arranged along two parallel lines at right angles to the plane of the sash and they form with each other a passage 22 constituting a transverse guide-way. Similarly, the interruptions 26, 26'', 28, on the one hand, and 26', 26''', 28',

on the other hand, are arranged along two lines parallel to the aforesaid ones and leaving between each other a passage **22** forming a second transverse guide-way.

These transverse guide-ways are arranged in front of the position of the runners **12'** when the sashes are in the closed position, so that said runners may be guided when the sashes are to be displaced for bringing them from their closing plane to their sliding plane. The number of guide-ways **22** is the same as the number of runners. In the case illustrated in the drawings, one runner has been provided for a sash, say two runners **12'** and thus two guide-ways **22**. In most cases, however, each sash will be provided with two, three or more runners. In this case, there will be formed four, six or more guide-ways **22**.

The upper frame rail is of identical structure to that of the lower frame rail which has been described, and it is symmetrically arranged with respect thereto and to the horizontal middle plane of the frame.

Two holes **19, 19'** are provided in the upper flanges **18, 18'** of the lower frame rail. The axes of these holes are coincident with those of the passages **22**. No such apertures are provided in the upper frame rail, but the horizontal web thereof is provided with a number of apertures **29**, in a number equal to that of the upper runners **12''**, such apertures being arranged and sized to permit the passage of said guide elements.

All the abutment surfaces of the vertical and horizontal section irons of the sashes are lying in the closing planes A—A and B—B. The abutment surfaces contained in each of said planes constitute a continuous uninterrupted surface of rectangular shape. The outer surface of the runners **12'** are in contact with the inner abutment surfaces of the upward flanges **18, 18'**, the abutment surfaces of the runners of the sash **1** being in the closing plane A—A, and the runners of the sash **2**, in the plane B—B. The guide elements of the upper and lower transverse sash members are entirely protected by the frame. A section made at any place through the frame will give a figure of same height and same width.

By lifting the handles, the sashes are unlocked; the sash **1** swings on its base to the right (see Fig. 3) and the sash **2** swings on its base towards the left. The sashes are opened just like a shutter and ventilation occurs along the periphery, and owing to the broken line which the air is caused to follow, this deviated ventilation avoids any direct air current and damps any hard gale.

For bringing the sashes in their sliding plane, the lower part of the sash **1** is pushed outwards and the lower part of the sash **2** is pulled inwards. The two sashes are then in the position illustrated in Fig. 4; the runners which were originally lying in the guide-way line **21'**, are now on the guide-way line **21** and vice versa. The sashes may now slide over the whole length of the frame.

The frame may be constructed of any material, but will be made preferably of metal, for instance iron or bronze. When the frame will be made of iron, it will be advantageous to make use of fixed guide-ways made of copper, brass or other material less liable to oxydation. A clearance is provided between the upper runners **12''** and the transverse member **6, 6'**, in such a manner that the sliding motion of each sash occurs with slight friction; this clearance does not interfere with the tightness of the frame, which is secured by pressing the sashes against the casement. The sliding planes of each sash will be at a convenient distance from each other, so that the sashes may slide without coming into contact.

Fig. 9 illustrates a frame similar to that of Figs. 7 and 8, but of which the horizontal section irons are arched. The embodiment according to Fig. 9 will be particularly advantageous in buildings comprising loggias or other portions of arched shape.

The sashes may be dismounted by acting as follows:

The window being closed in the position illustrated in Fig. 7, the sashes are unlocked by lifting the handles. One of the sashes is displaced in the direction perpendicular to its closing plane, so that the runners **12'** are exactly in front of the corresponding passages **29** provided in the upper rail of the frame. The sash is then lifted so as to engage the runners as far as possible into the openings **29**. It is then possible, by inclining the sash, to make the lower runners **12'** pass over the inner partition of the guide-ways **21, 21'**, and thus to remove the sash. The same operations are repeated for removing the other sash.

The frame according to the invention presents generally the following advantages.

When closed, a considerable tightness is secured, owing to the absence of pivots and hinges and to the provision of a closing device at each pair of adjacent upright members. Unlocked, it makes possible an adjustable and indirect ventilation, as described herebefore. The sashes are easily removed without the use of any tool and without dismounting any piece. The lower and upper rails of the frame have the smallest transverse section possible and when the window is closed, the guide-ways are all concealed.

I claim:

1. Horizontally sliding windows comprising at least one frame formed with uprights and horizontal members all having two abutment faces and the lower horizontal member of which comprises a horizontal web extending over the whole length of the frame, two vertical flanges, parallel to each other but arranged on different planes, one of the flanges extending from one end of the frame up to about one half of the length thereof and the other flange extending from the other end of the frame also up to one half of the length thereof, this horizontal member comprising, moreover, two longitudinal ribs located at the underside of the web, the window comprising, moreover, at least two sashes which, in the closed position, are substantially in one and the same plane designated as closing plane, means permitting each sash to be moved from the said closing plane to sliding planes, the sliding plane of one of the sashes being at one side and the sliding plane of the other sash being at the other side of said closing plane, and guiding means for the sashes in their respective sliding planes.

2. Horizontally sliding windows comprising a frame, at least two sashes slidable in the frame, means permitting each sash to be moved into the closed position so as to be substantially in one and the same plane, said sashes being supported each by the bottom rail of the frame by means of a guiding element for guiding the sashes in their sliding and closing motion, said bottom rail of the frame comprising a horizontal web extending over the whole length of the frame, two vertical flanges parallel to each other

but arranged on different planes, the inner surface of each of said flanges forming an abutment for the sashes in the closed position, one flange extending from one end of the frame up to about one half of the length thereof and the other flange extending from the other end of the frame also up to about one half of the length thereof, this bottom rail comprising moreover two adjacent longitudinal ribs, the upper face of the horizontal web of the rail being provided with two longitudinal guide-ways formed by two grooves which are each limited by an outer and an inner partition, the frame comprising moreover transverse guiding means at right angles to the first said guiding means.

3. Horizontally sliding windows comprising a frame, at least two sashes slidable in the frame, means permitting each sash to be moved into the closed position so as to be substantially in one and the same plane, said sashes being supported each by the bottom rail of the frame by means of a guiding element provided also for guiding the sashes in their sliding and closing motion, said bottom rail of the frame comprising a horizontal web extending over the whole length of the frame, two vertical flanges parallel to each other but arranged on different planes, one flange extending from one end of the frame up to about one half of the length thereof and the other flange extending from the other end of the frame also up to about one half of the length thereof, this bottom rail comprising moreover two adjacent longitudinal ribs, the upper face of the horizontal web of the rail being provided with two longitudinal guide-ways formed by two grooves which are each limited by an outer and an inner partition, the frame comprising moreover transverse guiding means at right angles to the first said guiding means, said transverse guiding means being formed by interruptions in the vertical inner and outer partitions.

4. Horizontally sliding windows comprising a frame, at least two sashes slidable in the frame, means permitting each sash to be moved into the closed position so as to be substantially in one and the same plane, said sashes being supported each by the bottom rail of the frame by means of a guiding element provided also for guiding the sashes in their sliding and closing motion, said bottom rail of the frame comprising a horizontal web extending over the whole length of the frame, two vertical flanges parallel to each other but arranged on different planes, one flange extending from one end of the frame up to about one half of the length thereof and the other flange extending from the other end of the frame also up to about one half of the length thereof, this bottom rail comprising moreover two adjacent longitudinal ribs, the upper face of the horizontal web of the rail being provided with two longitudinal guide-ways formed by two grooves which are each limited by an outer partition, and an inner partition, the frame comprising moreover transverse guiding means at right angles to the first said guiding means, said transverse guiding means being formed by interruptions in the vertical inner and outer partitions, the upward flanges being moreover provided with an aperture located within the axis of each transverse guiding means.

5. Horizontally sliding windows comprising a frame, at least two sashes slidable in the frame, means permitting each sash to be moved into the closed position so as to be substantially in one and the same plane, said sashes being supported each by the bottom rail of the frame by means of a guiding element provided also for guiding the sashes in their sliding and closing motion, said bottom rail of the casement comprising a horizontal web extending over the whole length of the frame, two vertical flanges parallel to each other but arranged on different planes, one flange extending from one end of the frame up to about one half of the length thereof and the other flange extending from the other end of the frame also up to about one half of the length thereof, this bottom rail comprising moreover two adjacent longitudinal ribs, the upper face of the horizontal web of the rail being provided with two longitudinal guide-ways formed by two grooves which are each limited by an outer and an inner partition, the frame comprising moreover transverse guiding means at right angles to the first said guiding means, said transverse guiding means being formed by interruptions in the vertical inner and outer partions, the upper rail of the frame being provided with apertures bored within the web for the purpose set forth.

6. In a sash window of the type set forth, a frame, sliding sashes formed with vertical and transverse rail members, a lower transverse member comprising a horizontal web, a main vertical downward flange, an auxiliary vertical downward flange, shorter than the first one, this latter flange being provided with one or more supporting runners, the surfaces of which are lying in the plane of the outer surface of the auxiliary vertical flange, the main and auxiliary flanges of one sash being symmetrically arranged with respect to the flanges of the adjacent sash.

7. Horizontally sliding windows comprising at least one frame formed with uprights and transverse members all having two abutment faces and the lower horizontal rail of which comprises a horizontal web extending over the whole length of the frame, two vertical flanges, parallel to each other but arranged on different planes, one of the flanges extending from one end of the frame up to about one half of the length thereof and the other flange extending from the other end of the frame also up to one half of the length thereof, this transverse rail comprising moreover two longitudinal ribs located at the underside of the web, the upper rail of the frame being of a similar construction but in symmetrical arrangement to the lower rail with respect to the horizontal middle plane of the frame, the window comprising, moreover, at least two sashes which in the closed position, are lying substantially in one and the same plane designated as closing plane, means permitting each sash to be moved from the said closing plane to sliding planes, the sliding plane of one of the sashes being at one side and the sliding plane of the other sash being at the other side of said closing plane, and guiding means for the sashes in their respective sliding planes.

8. Horizontally sliding windows comprising a frame, at least two sashes slidable in the frame, means permitting each sash to be moved in the closed position, so as to be substantially in one and the same plane, said sashes being supported each by the bottom rail of the frame by means of a guiding element provided also for guiding the sashes in their sliding and closing motion, said bottom rail of the frame comprising a horizontal web extending over the whole length of the frame, two vertical flanges parallel to each other but arranged on different planes, one flange extending from one end of the frame up to

about one half of the length thereof and the other flange extending from the other end of the frame also up to about one-half of the length thereof, this transverse rail comprising moreover two adjacent longitudinal ribs, the upper face of the horizontal web of the rail being provided with two longitudinal guide-ways formed by two grooves which are each limited by an outer and an inner partition, the guiding elements of the lower horizontal members of the sashes having studs at right angles to the plane of the guiding elements for guiding the sashes in the closing motion.

9. Horizontally sliding windows comprising a frame formed with section irons having at least two abutting faces, at least two sashes slidable in the frame, the sashes being formed with section irons having at least two abutting faces, means permitting each sash to be moved into a closed position so as to be substantially in one and the same plane, called closing plane, means permitting each sash to be moved from the closing plane to sliding planes, said sliding plane for one sash being at one side and the sliding plane of the other sash being at the other side of the closing plane, and horizontal guiding means for the sashes substantially parallel to said closing plane.

10. Horizontally sliding windows comprising a frame, at least two sashes slidable in the frame, the frame and the sashes being formed with section irons having all the same width, means permitting each sash to be moved into a closed position so as to be substantially in one and the same plane, called closing plane, means permitting each sash to be moved from the closing plane to sliding planes, said sliding plane for one sash being at one side and the sliding plane of the other sash being at the other side of the closing plane, and horizontal guiding means for the sashes substantially parallel to said closing plane.

JOSEPH FRANCOTTE.