B. C. ROBERTS.

POST HOLE MACHINE.

APPLICATION FILED SEPT. 9, 1912.

1,073,821.

Patented Sept. 23, 1913.

2 SHEETS—SHEET 1.

Fig. 1.

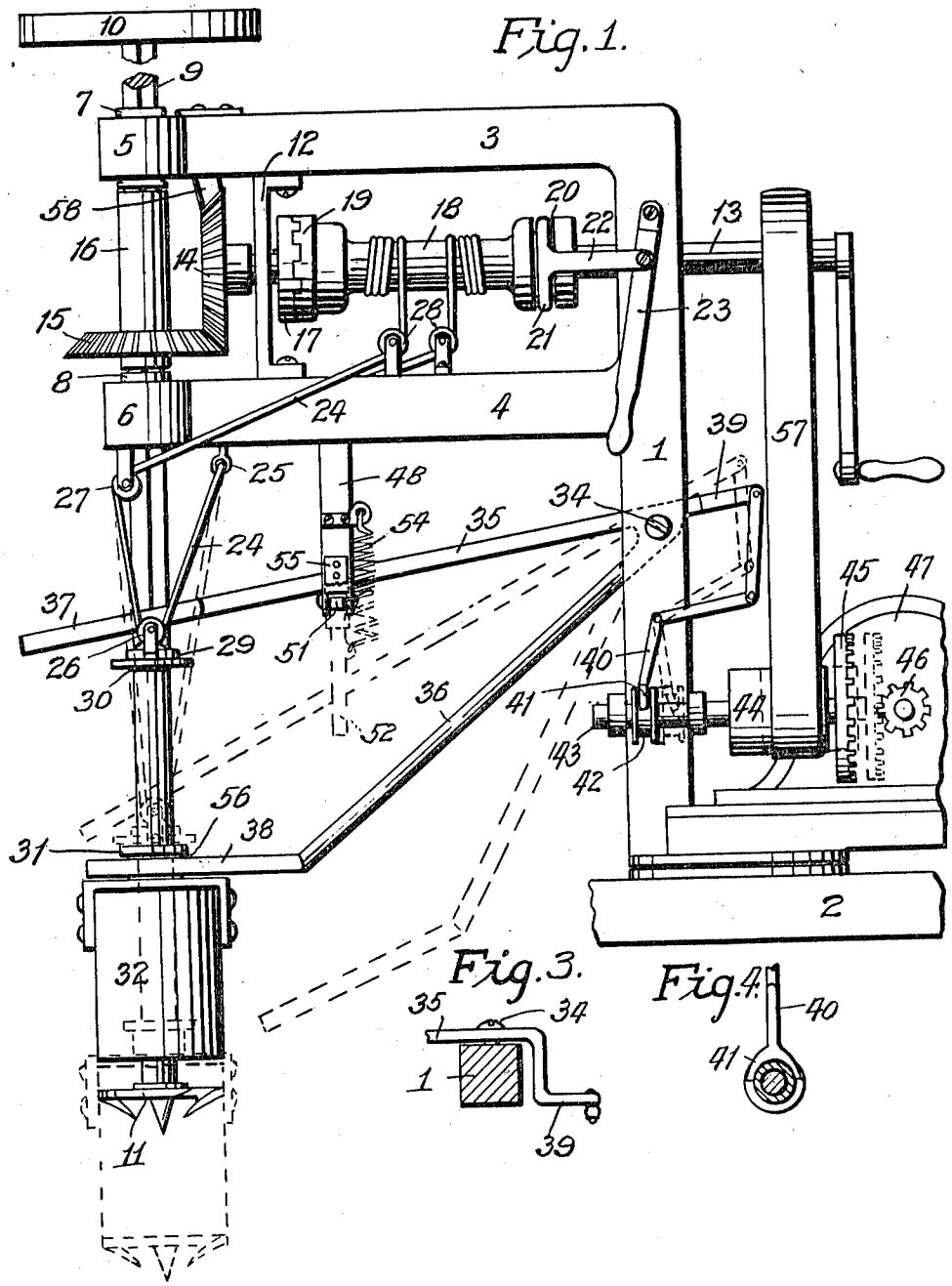

Fig. 3.

Fig. 4.

Witnesses
L. C. Paley.
Gustav Drews.

Inventor
Bert C. Roberts.
by Clarence J. Softon
Atty.

B. C. ROBERTS.

POST HOLE MACHINE.

APPLICATION FILED SEPT. 9, 1912.

1,073,821.

Patented Sept. 23, 1913.

2 SHEETS—SHEET 2.

Fig. 2.

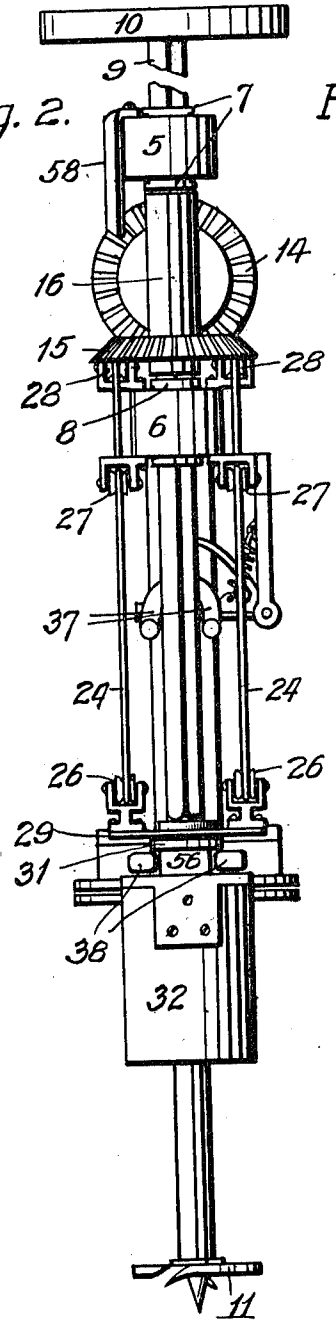

Fig. 6.

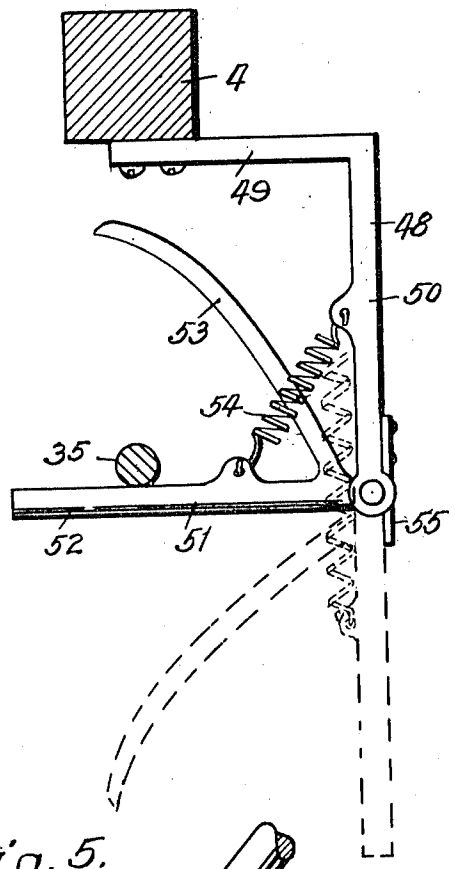

Fig. 5.

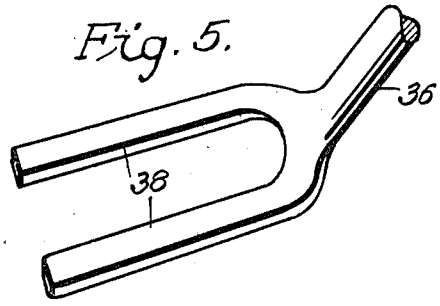

Witnesses
L. A. Paley
Gustav Drews

Inventor
Bert C. Roberts
by Clarence J. Lofting
Atty.

UNITED STATES PATENT OFFICE.

BERT CECIL ROBERTS, OF BECKWITH, IOWA, ASSIGNOR OF ONE-HALF TO LLOYD LESSY, OF BECKWITH, IOWA.

POST-HOLE MACHINE.

1,073,821. Specification of Letters Patent. Patented Sept. 23, 1913.

Application filed September 9, 1912. Serial No. 719,494.

To all whom it may concern:

Be it known that I, BERT CECIL ROBERTS, a citizen of the United States, residing at Beckwith, Iowa, have invented new and useful Improvements in Post-Hole Machines, of which the following is a specification.

The invention relates to the general class of drilling machines and is intended for digging holes for posts.

A particular object of the invention is to provide an apparatus with which holes for posts can be rapidly and efficiently dug.

To this end an auger is provided to drill the hole and at the same time force the material to be excavated into a bucket which is situated above it. The auger is vertically slidable with relation to the bucket, and when the bucket is filled with earth, can set up against the bottom of the bucket and thus hold the earth in the bucket. The bucket with its temporary bottom can then be raised and swung to a place where it is desired to dump its contents. At such place, the vertically slidable auger is lowered from the bucket and thus the contents of the bucket permitted to drop therefrom.

Another object of the invention is to provide means for operating said devices either by hand or motor power.

It is also an object of the invention to provide means for automatically throwing said device out of operative connection with said motor.

A further object is to provide means for automatically engaging and holding the bucket while the auger is allowed to drop.

One feature of the invention is that a hole of a comparatively narrow diameter can be dug to a very great depth.

Another feature of the invention is that the material excavated can be conveniently dumped away from the hole. And furthermore, the ground in its immediate vicinity, can be kept entirely free from the excavated material.

Still another feature of the invention arises, when the hole sought to be dug passes through pavement or other firm surface. With this device, only a small portion of the pavement need be removed, practically no more than the area of a transverse section of the post to be inserted.

The above and other features, advantages and capabilities will become apparent from a detail description of the accompanying drawings in which—

Figure 1 is a side view in elevation of the apparatus embodying my invention, showing the bucket and auger held together in their raised position and in their lower position, the dotted diagram illustrating the lowered position. Fig. 2 is an end view of the device which shows the bucket held in its raised position and the auger released, illustrating the relative positions of the auger and bucket when the contents of the bucket are intended to be removed. Fig. 3 shows the angle that is made about the frame by the two-arm piece for holding the bucket in its raised position. Fig. 4 shows in detail the bifurcated end of the bent lever of the clutch mechanism for connecting with the motor. Fig. 5 shows the bifurcated end of the lower arm of the two-arm piece for holding the bucket in its raised position. Fig. 6 shows the catch mechanism for maintaining in its raised position the two-arm piece after it has been raised into such position.

With reference to the drawings, I will designate the upright member of the frame as 1, which frame may be pivotally mounted on any suitable support 2. At the upper end of this upright member, two arms 3 and 4 project out horizontally, and parallel with each other. The ends 5 and 6 of each of these arms are slightly enlarged in which enlargements, circular openings are provided concentric with one another to receive circular sleeves 7 and 8 which are slidably mounted on auger rod 9. These sleeves are provided with shoulders at their upper and lower ends to retain them in position in the ends of the arms. The upper part of the auger rod is angular in cross-section for purposes which will hereinafter be seen, and the lower part circular in cross-section. At its upper end, the auger rod is provided with a fly-wheel 10 and at its lower end with an auger 11. The fly-wheel function is mainly to add weight, in order to assist the auger in biting into the ground.

The arms 3 and 4 are connected by a suitable cross-piece 12. A shaft 13 parallel with and between these arms 3 and 4, is rotatably mounted at one end in the upright member 1 and at its other end in this cross-piece 12. This shaft is provided at its outer

end with a beveled gear 14 continuously in mesh with a beveled gear 15 fast on sleeve 16 which is slidable on and rotatably mounted with auger rod 9. This shaft 13 may be driven by hand for which reason a crank lever is provided.

The shaft 13 is provided with a fixed toothed clutch member 17. A drum 18 loosely mounted on said shaft 13 has a clutch member 19 at one end adapted to engage clutch member 17. At its other end this drum 18 has any suitable clutch controlling member as for instance, an annular groove 20 and a bifurcated member 21 playing in said groove, which bifurcated member has an extension 22 which is fulcrumed to a lever arm 23 pivoted to upright 1. A flexible member or rope 24 is adapted to be wound on drum 18. This flexible member passes through eyelet 25, from there, one end on one side of the auger rod passes down under sheave 26, up and over sheave 27, across and under sheave 28 and then is connected to the drum. The other end of the flexible member engages similar sheaves 26, 27 and 28 on the other side of the auger rod. Sheave 26 is suitably journaled on collar 29 which is free to rotate in a groove 30 on the auger rod 9 but fixed to move up and down with the auger rod. Sheaves 27 and 28 are suitably journaled on arm 4.

On the lower circular part of auger rod 9, slidably mounted is a collar 31 rigidly fixed to an inverted bucket 32. This collar 31 with its bucket 32 is free to slide on auger rod 9 upward to abut against collar 29 and the lower end of bucket 32 abutting against auger 11 is of sufficient diameter to serve as a temporary bottom for the bucket 32.

Arms 35 and 36 are integral with one another and pivoted at their intersecting point at 34. The arm 35 is provided with a bifurcated end 37 clearly shown in Fig. 2. Arm 36 has a bifurcated end 38 which, in the present instance, makes an angle of about forty-five degrees with the body portion of the arm 36. This bifurcated end is clearly shown in Fig. 5. The two-arm device has a rear extension 39 with a bent intermediate portion to allow the extension to pass in a line parallel with the two-arm device on the opposite side of the upright 1. This rear extension 39 is connected to clutch arm 40 by a link. The clutch arm 40 has the usual bifurcated portion 41 clearly shown in Fig. 4, to engage the annular groove 42 on the clutch shaft 43 which has a pulley 44 mounted to rotate with the shaft and a toothed member 45 which, when the clutch member is shifted to position of operation, engages a suitable pinion 46 driven by some source of power as a motor 47.

A catch mechanism is provided consisting of a right-angled member 48 having its horizontal piece 49 secured to the lower side of arm 4. The lower end of the vertical piece 50 has hinged thereto a second angular member 51. This angular member 51 has a straight member 52 and a curved member 53 curving toward the straight member. Substantially at the middle of the vertical piece of the angular member 48 one end of a coil spring 54 is secured which, at its other end is secured at substantially the middle of the straight member 52. At the lower end of the vertical piece 50 is provided a straight flexible member 55 projecting beyond the end of the vertical piece 50, and in the well known manner acts as a spring to hold the angular member 51 so that the straight member 52, when in its vertical position will have its side held flat against it and when in horizontal position will have its base held flat against it. The coil spring 54 serves to pull up the angular member 51.

The operation of the device is substantially as follows: When the machine is in the position of rest, as shown in Fig. 1, the clutch lever 23 is swung to the right to disengage the clutch mechanism. The weight of the auger and its component parts will *per se* pull downward thereby rotating the drum 18 to play out the flexible member and thus the auger will drop until collar 29 reaches the position immediately above the bifurcated end 38. The bifurcated end 37 of the upper arm 35 in the position of rest passes around the auger rod 9 and at its middle portion is held by the catch arm 52. The bifurcated end 38 engages the annular groove 56 of the collar 31 to hold the bucket in its raised position. Now, when the catch member is pressed downward to release arm 35, the weight of the bucket will be sufficient to allow it to drop until it reaches the auger 11. The bucket will, of course, pull the bars with it and thus the weight of the bars assisting also, the clutch arm 40 will shift the clutch mechanism over so that the toothed clutch member 45 enters into engagement with the sprocket wheel 46. The sprocket wheel 46 drives the toothed clutch member 45 which drives the pulley 44 which pulley 44 by means of a belt 57 drives the shaft 13. The shaft 13 drives the beveled gear 14 which meshes with the beveled gear 15 fast on auger rod 9 and thus rotates the auger 11. The auger 11 is adapted to force the material to be excavated above it into the bucket 32.

When the bucket 32 is filled, it is merely necessary to shift the clutch lever 23 to the left to shift drum 18 into engagement. The drum will then rotate with the shaft and wind up the flexible member and thereby raise the auger 11 with the bucket 32. The collar 29 in its upward movement engages the bifurcated end 37 and thus raises the arms 35 and 36 with it. Arm 36 moves over

and engages the annular groove 56 in the collar 31. Arm 35 in its upward movement strikes the curved member 53 and pulls up the angular piece 51. As soon as this angular piece 51 has passed dead center with reference to the straight flexible member 55, the coil spring 54 will snap up this member 51 and with it securely hold up arm 35. The arm 35 by means of the link and the thereto connected bifurcated portion 41, shifts the clutch member out of engagement with the motor. So that drum 18 when it is released to unwind itself and lower auger 11, will not operate the shaft 13 and set auger 11 into rotation, a dog 58 is suitably secured to arm 3 to engage beveled gear 14 and thus prevent rotation of the auger. Also when the auger has been raised by the winding up of the drum, by means of the dog reverse rotation is prohibited and therefore, so long as the clutch is in engagement, the auger will remain raised.

When the device is to be operated by hand, it is obvious that the clutch mechanism for the motor and the belting will be unnecessary.

While I have herein shown and described only one embodiment of my invention, it is to be understood that various changes and modifications may be made by those skilled in the art without departing from the scope of my invention as defined in the appending claims.

Having thus described my invention, what I claim and desire to secure by Letters Patent is:

1. In an excavator having a pivotally mounted frame consisting of an upright member having a horizontal extension at its upper end, a driving shaft mounted in said frame, an auger rod mounted in the outer end of said horizontal extension and adapted to be rotated by said driving shaft, an auger fixed on the end of said auger rod to rotate therewith, a bucket slidably mounted on said auger rod to set over said auger, and means operatively connected with said driving shaft for raising said bucket.

2. A post hole excavator having a pivotally mounted frame consisting of an upright member having two horizontal members at its upper end, an auger rod rotatably mounted in the outer ends of said two horizontal members and movable up and down, a driving shaft mounted in said frame and adapted to rotate said auger rod, an auger fixed on the end of said auger rod to rotate therewith, and means operatively connected with said driving shaft for raising said auger rod.

3. A post hole excavator having a pivotally mounted frame consisting of an upright member having two horizontal members at its upper end, a shaft mounted between said horizontal members, a drum on said shaft, an auger rod rotatably mounted in the outer ends of said horizontal members and movable up and down, an auger fixed to the end of said auger rod, a flexible member connected to said auger rod and to said drum, said flexible member adapted to be wound up on said drum and thus control the raising and lowering of said auger, and a bucket slidably mounted on said auger rod and adapted to set over said auger.

4. A post hole excavator having a pivotally mounted frame consisting of an upright member and two parallel members at its upper end, a shaft mounted between and parallel to said parallel members, a beveled gear fixed on the end of said shaft, an auger rod rotatably mounted in the ends of said parallel members and permitted to move up and down, a second beveled gear non-rotatably mounted on said auger rod, said second beveled gear meshing with the beveled gear on said shaft to transmit rotation from said shaft to said auger rod, and a bucket slidably mounted on said auger rod and mounted to set over said auger.

5. A post hole excavator having a frame, a shaft rotatably mounted in said frame, an auger rod rotatably mounted in said frame to rotate with said shaft, an auger fixed on the lower end of said auger rod, a drum loosely mounted on said shaft, a flexible member connected to said auger rod and adapted to be wound up on said drum, a toothed clutch member fixed on said shaft to rotate therewith, a toothed clutch member mounted on said drum to rotate therewith adapted to be set into engagement with the clutch member on said shaft and thereby wind up the flexible member on said drum and with it raise the auger rod.

6. A post hole excavator having a frame, a shaft rotatably mounted in said frame, an auger rod rotatably mounted in said frame to rotate with said shaft, an auger fixed on the lower end of said auger rod, a drum loosely mounted on said shaft, a flexible member connected to said auger rod and adapted to be wound up on said drum, a toothed clutch member fixed on said shaft to rotate therewith, a toothed clutch member mounted on said drum to rotate therewith adapted to be set into engagement with the clutch member on said shaft and thereby wind up the flexible member on said drum and with it raise the auger rod, and a bucket slidably mounted on said auger rod and set over said auger.

7. A post hole excavator having a frame, a shaft rotatably mounted in said frame, an auger rod rotatably mounted in said frame to rotate with said shaft, an auger fixed at the lower end of said auger rod, a fly-wheel fixed at the upper end of said auger rod to rotate therewith, a drum loosely mounted on said shaft, a flexible member connected to

said auger rod and adapted to be wound up on said drum, a toothed clutch member fixed on said shaft to rotate therewith, and a toothed clutch member mounted on said drum to rotate therewith adapted to be set into engagement with the clutch member on said shaft and thereby wind up the flexible member on said drum and with it raise the auger rod.

8. A post hole excavator having a frame, an auger rod rotatably mounted on said frame, an auger fixed at the lower end of said auger rod to rotate therewith, a bucket slidably mounted on said auger rod and permitted to set over said auger, and a rigid member pivotally mounted on said frame and adapted to move up and down with said bucket, said member engaging and holding said bucket when in its raised position.

9. A post hole excavator having a frame, an auger rod rotatably mounted on said frame, an auger fixed at the lower end of said auger rod to rotate therewith, a bucket slidably mounted on said auger rod and permitted to set over said auger, and a two-arm member pivotally mounted on said frame, said member adapted to move up and down with said bucket, said member consisting of an upper and lower arm, said upper arm in continuous engagement with said auger rod and adapted to move upward therewith, and said lower arm engaging and holding said bucket when in its raised position.

10. In an excavator having a frame, an auger rod rotatably mounted in said frame, an auger fixed at the lower end of said auger rod to rotate therewith, a bucket slidably mounted on said auger rod and permitted to set over said auger, a rigid member pivotally connected to said frame and in continuous engagement with said auger rod so that it will be raised with the same, and means for rotating said auger rod, said rigid member being operatively connected to throw said rotating means out of engagement with said auger rod when said auger rod is in its raised position.

11. A post hole excavator having a frame, an auger rod rotatably mounted in said frame, an auger fixed at the lower end of said auger rod to rotate therewith, an inverted bucket slidably mounted on said auger rod and permitted to set over said auger, said bucket having a collar fixed to its upper end, said collar having an annular groove passing around said auger rod, and a rigid member pivotally connected to said frame, said member having a bifurcated end adapted to be engaged in the annular groove of said collar, thereby to hold said bucket when in its raised position.

12. A post hole excavator having a frame, an auger rod rotatably mounted in said frame, an auger fixed at the lower end of said auger rod to rotate therewith, an inverted bucket slidably mounted on said auger rod and permitted to set over said auger so that the excavated material from the auger may be forced into it, and a rigid member pivotally connected to said frame and permitted to move up and down with said bucket, a collar on said auger rod fixed to move up and down therewith, said rigid member having a bifurcated end engaged by said collar and adapted thereby to be raised with the auger rod and to hold said bucket when in its raised position.

13. A post hole excavator having a pivotally mounted frame consisting of an upright member and two parallel members at its upper end one above the other, an auger rod rotatably mounted in the ends of said parallel members, an auger fixed at the lower end of said auger rod to rotate therewith, an inverted bucket slidably mounted on said auger rod, a rigid member pivotally connected to said frame and permitted to move up and down with said bucket, a collar on said auger rod fixed to move up and down therewith, said rigid member having a bifurcated end engaged by said collar and adapted thereby to be raised with the auger rod, and a catch mechanism fixed to the lower side of the lower one of said parallel members, said catch mechanism adapted to engage said rigid member when in its raised position and hold it in such position.

14. A post hole excavator having a pivotally mounted frame consisting of an upright member and two parallel members at its upper end one above the other, an auger rod rotatably mounted in the outer ends of said parallel members, an auger fixed at the lower end of said auger rod to rotate therewith, an inverted bucket mounted on said auger rod, said bucket having a collar fixed to its upper end, said collar having an annular groove passing around said auger rod, a rigid member pivotally connected to said frame and permitted to move up and down with said bucket, said rigid member having a bifurcated end, said bifurcated end being adapted to engage in the groove of said collar and thereby retain said bucket in its raised position, and a catch mechanism fixed to the lower side of the lower one of said parallel members, said catch mechanism adapted to engage said rigid member when in its raised position and hold it in such position and with it the bucket, thereby permitting the auger rod to drop without said bucket.

15. A post hole excavator having a pivotally mounted frame consisting of an upright member and two parallel members at its upper end one above the other, an auger rod rotatably mounted in the outer ends of said parallel members, an auger fixed at the lower end of said auger rod to rotate therewith, an inverted bucket mounted on

said auger rod, a rigid member having an upper arm and a lower arm pivotally connected to said frame and permitted to move up and down with said bucket, a collar on said auger rod fixed to move up and down therewith, the upper arm of said rigid member having a bifurcated end, said bifurcated end adapted to be engaged by said collar and thereby to be raised with said auger rod, said bucket having a collar fixed to its upper end, said collar having an annular groove passing around said auger rod, the lower arm of said rigid member having a bifurcated end, the bifurcated end of said lower arm adapted to engage in the groove of said collar and thereby retain the bucket in its raised position, and a catch member fixed to the lower side of the lower one of said parallel members, said catch member adapted to engage said rigid member when in its raised position and hold it in such position and with it the bucket, thereby permitting the auger rod to drop without said bucket.

16. A post hole excavator having a pivotally mounted frame consisting of an upright member and two horizontal members at its upper end one above the other, an auger rod rotatably mounted in the outer ends of said horizontal members, an auger fixed at the lower end of said auger rod to rotate therewith, a rigid member pivotally connected to said upright member, said rigid member being in continuous engagement with said auger rod and adapted to be raised by it, a motor, operating means for said auger rod, a clutch mechanism journaled in said upright member adapted to connect said motor with said operating means for said auger rod, a lever having a bifurcated end pivotally connected to said upright member, said bifurcated end engaging said clutch mechanism, and a link connecting said lever with said rigid member, said clutch mechanism being out of engagement when said rigid member is in its raised position and in engagement when said rigid member is in its lower position.

17. A post hole excavator having a pivotally mounted frame consisting of an upright member and two horizontal members at its upper end, an auger rod rotatably mounted in the outer ends of said horizontal members, an auger fixed at the lower end of said auger rod to rotate therewith, an inverted bucket slidably mounted on said auger rod, a rigid member pivotally connected to said upright member, said rigid member having a bifurcated end adapted to engage and hold said bucket when in its raised position and permit said auger rod to drop, a motor, operating means for said auger rod, a clutch mechanism journaled in said upright member adapted to connect said motor with said operating means for said auger rod, a lever having a bifurcated end pivotally connected to said upright member, the bifurcated end of said lever engaging said clutch mechanism, and a link connecting said lever with said rigid member, said clutch mechanism being out of engagement when said rigid member is in its raised position and in engagement when said rigid member is in its lower position thus stopping the operation of the auger while the contents of the bucket are being removed.

18. A post hole excavator having a pivotally mounted frame consisting of an upright member having two horizontal members at its upper end one above the other, a shaft rotatably mounted between and parallel to said parallel members, a drum loosely mounted on said shaft, a toothed clutch member mounted on said shaft to rotate therewith, a toothed clutch member fixed on said drum to rotate therewith and adapted to engage with said clutch member on the shaft to set said drum to rotate with said shaft, a beveled gear fixed to the end of said shaft, an auger rod rotatably mounted in the outer ends of said horizontal members and adapted to move up and down, said auger rod having a beveled gear slidably mounted thereon and fixed to rotate therewith, said beveled gear on the auger rod continuously in mesh with said beveled gear on said shaft, a flexible member attached to said auger rod and adapted to be wound up on said drum when said clutch member connects said drum to rotate with said shaft, and a dog secured to the upper arm of said horizontal members, said dog engaging the beveled gear on said shaft and adapted to prevent such beveled gear from turning back when disengaged and thereby allow the connected drum to turn back.

19. In an excavator, a frame, an auger rod rotatably mounted in said frame, a bucket slidably mounted on said rod, means adapted to automatically engage said bucket for holding said bucket in its raised position and means for rotating said auger.

20. In an excavator, a frame, an auger rod rotatably mounted in said frame, a bucket adapted to move up and down on said rod, a collar having an annular groove fixed to the upper end of said bucket, means adapted to engage in the groove of said collar for holding said bucket in its raised position and means for rotating said auger.

21. In an excavator, a frame, an auger rod rotatably mounted in said frame, a bucket adapted to move up and down on said rod, a collar provided with a groove fixed to the upper end of said bucket, a rigid member pivotally mounted on said frame said member having an arm provided with a bifurcated end adapted to engage in the groove

of said collar for holding said bucket in its raised position and means for operating said auger rod.

22. In an excavator, a frame, an auger rod rotatably mounted on said frame, a driving mechanism for said auger rod, a bucket slidably mounted on said rod, means adapted to automatically engage said bucket for holding it in its raised position, and means for automatically disconnecting said driving mechanism when said bucket has reached its raised position.

23. In an excavator, a frame, an auger rod rotatably and slidably mounted on said frame, a collar connected to said auger rod, a driving mechanism for said auger rod, means for raising said auger rod, and means engaging said collar and adapted to throw said driving mechanism out of operative connection with said auger rod when said collar has reached its raised position.

24. In an excavator, a frame, a driving shaft rotatably mounted in said frame, a drum rotatably mounted on said shaft, an anger rod adapted to be rotated by said shaft, means connecting said drum with said anger rod for raising said auger rod, means for throwing said drum into and out of operative connection with said shaft, a driving mechanism for operating said shaft, a collar or extension on said auger rod, and means adapted to engage said collar or extension for throwing said driving mechanism out of operative connection with said shaft when said auger rod has reached its raised position.

25. In an excavator, a frame, an auger rod rotatably and slidably mounted in said frame, a collar or extension on said auger rod, a driving mechanism for said auger rod, a rigid member pivotally mounted on said frame and adapted to be engaged by said collar on said auger rod for throwing said driving mechanism out of operative connection, and yielding means for holding said driving mechanism out of operative connection until said auger rod is lowered.

26. In an excavator, a frame, an auger rod rotatably and slidably mounted in said frame, a rigid member pivotally connected to said frame and adapted to be engaged and raised by said auger rod, a driving mechanism for said auger rod, said rigid member being operatively connected to throw said driving mechanism out of engagement with said auger rod when said auger rod has reached its raised position.

27. In an excavator, a frame, an auger rod rotatably and slidably mounted in said frame, a driving mechanism for said auger rod and means for automatically throwing said driving mechanism out of operative connection with said auger rod when said auger rod has reached its raised position.

28. In an excavator, a frame, an auger rod rotatably and slidably mounted in said frame, a driving mechanism for said auger rod, and means pivotally mounted on said frame and adapted to be engaged and raised by said auger rod for throwing said driving mechanism out of operative engagement with said auger rod.

In witness whereof, I hereunto subscribe my name to this specification in the presence of two witnesses.

BERT CECIL ROBERTS.

Witnesses:
W. W. ISRAEL,
L. S. BRADEBARN.