Dec. 8, 1964 F. A. SCHWERTZ 3,160,091

HIGH SPEED XEROPRINTER AND METHOD THEREFOR

Filed May 14, 1959 2 Sheets-Sheet 1

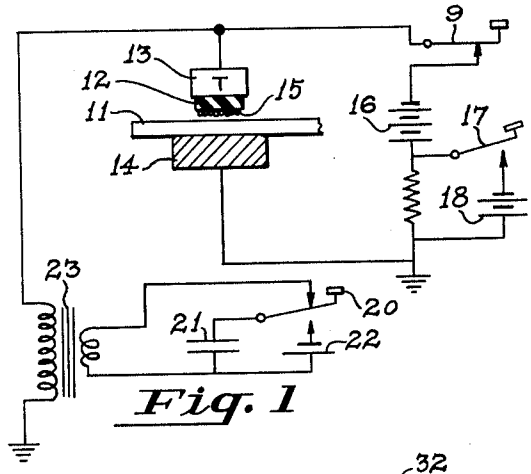

Fig. 1

Fig. 2

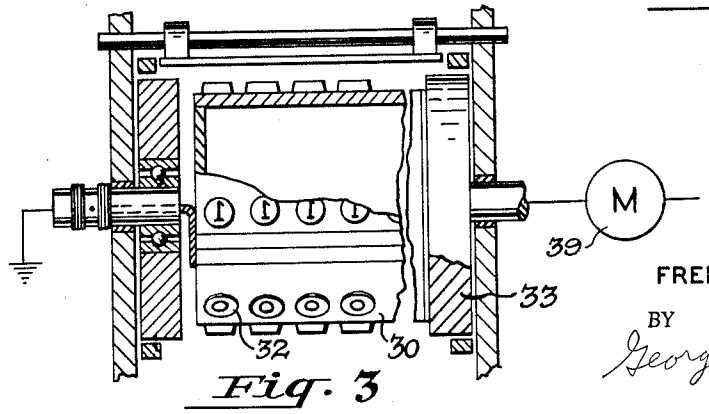

Fig. 3

INVENTOR.
FREDERICK A. SCHWERTZ

BY George W. F. Simmons

ATTORNEY

Dec. 8, 1964 F. A. SCHWERTZ 3,160,091

HIGH SPEED XEROPRINTER AND METHOD THEREFOR

Filed May 14, 1959 2 Sheets-Sheet 2

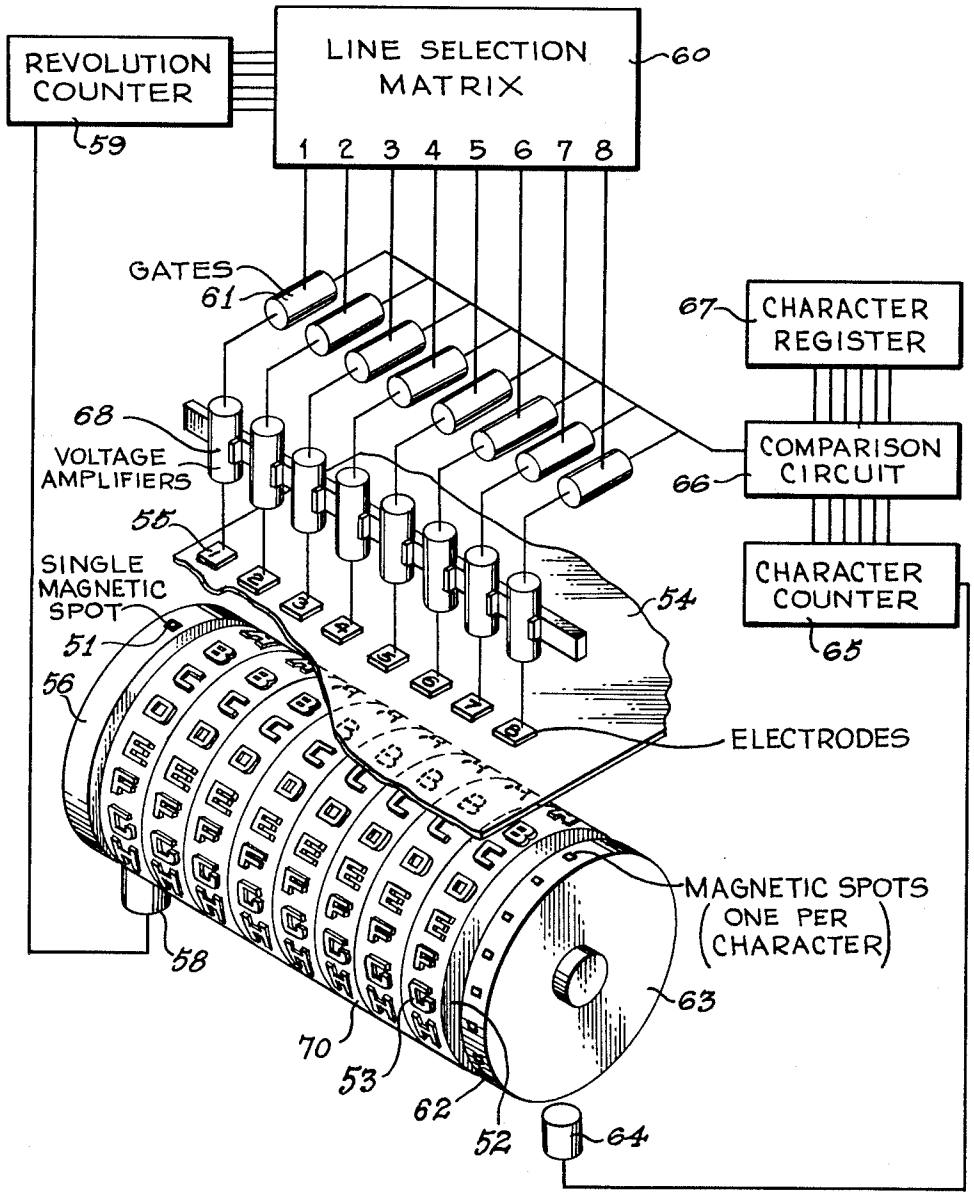

Fig. 4

INVENTOR.
FREDERICK A. SCHWERTZ

BY George W. F. Simmons

ATTORNEY

United States Patent Office

3,160,091

Patented Dec. 8, 1964

3,160,091

HIGH SPEED XEROPRINTER AND METHOD THEREFOR

Frederick A. Schwertz, Pittsford, N.Y., assignor to Xerox Corporation, a corporation of New York

Filed May 14, 1959, Ser. No. 813,196
3 Claims. (Cl. 101—92)

This invention relates to the electric recording of characters and to the application of such recording to electrostatic image processes.

In the more familiar aspects of electrostatic recording as described, for example, in U.S. 2,297,691 by C. F. Carlson, it is usual to first form an electrostatic image, for example, by the combined action of an electric field and exposure to light. Such an image is then developed or made visible by the deposition of electrostatically attractable powder or other finely-divided material as is now conventional.

More recently it has been found that certain images like alphanumeric or character images may advantageously be formed in the absence of exposure to an existing original. Thus, it has been found that an electrostatic image can be formed on a suitable insulator by applying an electric field from an adjacent member and that this means of image formation is virtually instantaneous in its response and is well adapted for the recording of conventional coded electric signals including high speed computer output. One such form of recording is disclosed in co-pending application S.N. 532,534, filed September 6, 1955 by C. F. Carlson. The process as described forms an electrostatic image on an insulating medium which is then made visible by using conventional electrostatic developing processes. More recently, it was found that by placing an insulating layer coated with a releasable electroscopic material in face-to-face relationship with an image receiving surface and applying thereto an intense electric field in image configuration, the electroscopic material is then transferred to the image-receiving surface in corresponding image configuration. Thus, the process offers a means of obtaining an immediately visible recording corresponding to the electric pulse applied. This process is disclosed in co-pending application S.N. 687,698, filed October 2, 1957 by C. F. Carlson, now abandoned.

Now in accordance with the present invention an immediately visible record is formed by placing an insulating layer, formed in image configuration and coated with a releasable electroscopic material, in face-to-face relationship with an image receiving surface and applying an intense electric field so as to transfer to the image-receiving surface the body of electroscopic material while retaining its image configuration. Thus, the instant invention enables the immediate visualization of the record while eliminating the separately coated insulating layer thus simplifying the machine design. Illustratively, a suitable powder carrying insulating layer in image configuration, as of plastic, on an electrically conductive backing is dusted with an electrically charged, black or colored, finely-divided powder and is placed in face-to-face relationship with an image receiving layer such as, for example, a web or sheet of paper. An electrode is placed behind the image receiving layer and a pulse of electric field or potential imparted between the electrode and the conductive backing of the insulating image character, the polarity and voltage being such as to move the powder toward or transfer its affinity to the image receiving surface.

It is to be realized that an electric pulse of the proper polarity may be applied either to the conductive backing behind the insulating image character or to the backing

electrode behind the image receiving layer. In the presently preferred embodiment of the invention it is found to be advantageous to apply the electric pulse to the backing electrode so that in a dynamic system the rapidly rotating character wheel is kept at ground potential and the electric pulse is applied only to the stationary backing electrode. The invention will, therefore, be described with particular reference to this embodiment with the understanding that this basis of description is for purposes of simplicity of illustration rather than a limitation of the scope of the invention.

The general nature of the invention having been set forth, the invention is now more fully described in illustrative detail in the following specification and the accompanying drawings, in which:

FIG. 1 is a diagrammatic view of a simple apparatus employing the present invention;

FIG. 2 is a diagrammatic view of a simple high-speed out-put recording apparatus for recording alphanumeric or similar information on a moving web;

FIG. 3 is a cross-section of image electrode mechanism according to FIG. 2;

FIG. 4 is a diagrammatic representation of electrode and circuitry arrangement useful in the invention.

Referring now to the figures, FIG. 1 illustrates a simple apparatus embodying the invention and useful for applying code data, emblems, reference numerals, letters and symbols, of other alphanumeric and like data to a suitable sheet material including paper, cloth, metal, plastic and the like. The data and information may, if desired, be original data applied to a previously blank image receiving surface or may be selectively overprinted or interlineated data applied to a surface already containing appropriate information or design. Thus, for example, the apparatus is useful for producing original information and data on a sheet or web of paper or business forms, for applying designs, or for imparting information in the margins of already imprinted or image bearing material or photographic film for identification or the like.

In FIG. 1 there is illustrated a copy sheet **11** such as a sheet of paper or the like which is positioned and adapted to receive the image. This sheet is positioned on a conductive base **14** and an alphanumeric character image of insulating material **12**, coated uniformly with electrostatically adhering resinous powder **15**, is laid powdered surface down closely spaced from the copy sheet. A backing electrode **13** preferably of metal or like electrically conductive material is placed behind the back of the character layer. For simplicity of operation it is frequently desirable to place the alphanumeric character image **12** in virtual contact with the copy sheet **11** and when this is done it is critically necessary to assure that the two surfaces are in extremely light contact. "Virtual contact" for the purpose of this description is defined as the condition of close proximity existing when one of the surfaces rests lightly and loosely against the other in loose contact, generally producing a spacing of about 2 microns at all except remotely distributed points of contact. This condition is to be distinguished from a condition of firm contact between the two surfaces in which case the spacing is in the order of about 1 micron, and also should be distinguished from a condition of pressure contact between the two surfaces at which the spacing is in the order of a fraction of 1 micron. For effective operation of this invention it has been found necessary to maintain spacing between the two surfaces at about 2 microns or higher, and preferably the two surfaces are spaced apart at a distance in the order of about 10 to 75 microns.

For electrical impulsing of the backing electrode 13

alternative operating circuits are shown, either or both of which can be used for recording. The first operating circuit is connected to electrode 13 through switch 9. Battery 16 thereby applies a bias to the electrode 13 making it negative with respect to conductive base 14, this bias field being insufficient to transfer the developer material from layer 12 to sheet 11. A second battery 18 is connected through switch 17 in parallel with a resistor 19 and in series with battery 16. When switch key 17 is closed the potential of battery 18 is added to the potential of battery 16 to apply a pulse in addition to the potential applied between conductive members 13 and 14. The potentials produced by batteries 16 and 18 are so selected that should the potential of battery 16 be insufficient to transfer the potential from one surface to the other when the copy sheet and developer sheet are placed lightly together then the total potential of batteries 16 and 18 is sufficient to produce such developer transfer. Potentials of about 500 volts for battery 16 and 500 volts for battery 18 have been found satisfactory.

A second key-operated circuit is illustrated in FIGURE 1 to apply a pulse to the electrode 13. This circuit is connected to electrode 13 by opening switch 9. The second circuit comprises a transformer or spark coil 23 with a high voltage secondary connected between electrode 13 and ground, and hence to base 14 which is also grounded. The primary circuit of the transformer includes a switch 20 having a key-operated common contact arm and front and back contacts for cooperation therewith, a condenser 21 and a battery 22. The contact arm of the switch is connected to one terminal of the condenser, the other condenser terminal being connected to one end of the transformer primary winding and to one terminal of battery 22.

When the switch is operated to engage the arm and front contact a circuit is completed to charge condenser 21 from battery 22. When the switch arm is released it opens the charging circuit and then engages the back contact which is connected to the remaining end of the primary winding, thereby closing a discharge circuit for condenser 21 through the primary. Discharge of the condenser through the primary induces a high voltage pulse in the secondary winding and this pulse is applied to the electrode 13. The polarity of battery 22 is arranged to produce a negative pulse on electrode 13, if the powder 15 has a negative charge, and hence a powder image is transferred to sheet 11 by the pulse. Due to the damping of oscillations only the first pulse from the transformer reaches a sufficiently high peak of potential to be effective in transferring powder. Succeeding oscillations of alternating polarity are ineffective since the peak potentials falls off rapidly with each half cycle. Thus, the second pulse, which is of opposite polarity to the transfer pulse is lower in peak voltage and does not transfer back any powder. It has been found, moreover, that even a complete reversal of field to the maximum voltage will not transfer all the powder back. Image transfer operating from a pulse as short as a few microseconds has produced good quality character images across a 3–4 mil gap with voltages in the range of approximately 1000 to 1500 volts.

Desirably, powder may be coated on the insulating character image by brushing it on or by cascading across the surface the powder itself or a powder carrier mixture such as is disclosed in Walkup and Wise patent, U.S. 2,638,416. Powder of a positive or negative polarity may be deposited on the image layer 12, but it has been found generally that xerographic developers which are most readily available and useful in this invention generally acquire a negative electric charge in contact with most surfaces. Thus, layer 12 may be a plastic material such as polystyrene, polyethylene terephthalate, phenol-formaldehyde, cellulose acetate or other insulating material, and the developer powder may be a powder of the type disclosed in the hereinabove Walkup and Wise patent, or may be such other powder as is conventionally used in the art of xerography. The application of a negative polarity pulse to the electrode produces image transfer.

In FIG. 2 is illustrated an output recorder adapted to produce a high speed instantaneously developed image in response to a timed input and a coded electric signal or may be operated from a memory storage device such as, for example, a magnetic tape or the like. It will be appreciated, however, that the circuit illustrated is by way of example only, and that other circuit arrangements can be used with the mechanical system disclosed.

Corresponding to the device illustrated in FIGURE 1, the recording means or the image forming member is a rotatable conductive cylindrical printing drum 30 having raised insulating alphanumeric character faces 32 on its periphery.

The printing cylinder 30 includes a plurality of rings or columns of insulating alphanumeric type faces 32 arranged around the periphery of the drum. These columns generally have a sequence such as numbers from 0 to 9 or a sequence such as the letters of the alphabet or the like. Desirably, the character rings may be in a series along the length of the cylinder corresponding to the length of a line of printing to be produced in image form along the image receiving surface. Thus, for example, each of the rings may consist of a separate character wheel mechanically joined to the adjacent ring or if desired at single conductive cylinder may be employed with a plurality of conductively joined character rings as shown in FIGURE 3. The character faces all lie in a cylindrical imaginary surface slightly above the drum surface and are spaced at an identical radius from an axle on which the cylinder may be rotated. When the electrode assembly 36 is separately pulsed and the cylinder is suitably grounded or electrically biased, the character wheels may be electrically joined as well as mechanically joined. However, greater flexibility of operation may sometimes be achieved by electrical separation between the character wheels, whereby the separate wheels may be successively biased or activated for printing in successive columns.

Positioned adjacent to the surface of character faces 32 and adapted to feed an image web or copy sheet 11 of dried paper or other sheet insulating material against the surface of electrode assembly 36 are suitable paper or web feed means. Such feed means may include, for example, a supply roll 42, feeding a web of image receiving material 11 either to a suitable take-up roll or around a web drive roll 48 from whence it passes to a copy storage or distribution location (not shown). Guide rolls 26 are suitably positioned to guide the moving paper into contact with the electrode assembly and to direct it in a path through the computer out-put recorder. A roll 46 holds the web against drive roll 48 to prevent slippage. An electrically heated hot plate 43 bears against the back of the web between the printing cylinder and drive roll 48 to fuse the powder images to the web and thereby produce a permanent record.

An electrode 36 is positioned opposite each ring or column of characters on the face of cylinder 30 and directly behind the web 11 as it passes in contact with the electrode. The faces of the electrodes are desirably curved to conform the web to the shape of the insulating characters at this point.

The electrode energizing system for only one of the columns or rings of characters is shown in FIGURE 2, the electrodes and circuits for the other columns being similar. For the circuit illustrated electrode 36 is biased by a battery 16 through adjustable potentiometer 116 to raise it to a potential slightly below that required for recording. The polarity of the electrode is opposite to the polarity of charge which is on the powder coating of character faces 32. In the present illustration the powder carries a negative charge and electrode 36 is given a positive potential in relation to ground by battery 16, the

negative terminal of which is grounded through resistance **118**. A capacitor **117** is connected across potentiometer **116**.

A triode **119** has its cathode connected to resistance **118** and to electrode **36** through capacitor **117**. The anode is connected through battery **120** to ground so that when triode **119** is made momentarily conducting the potential of battery **120** is applied across resistance **118** to add this potential to the fixed potential applied to electrode **36** by battery **16**, and thereby to produce an electric field between electrode **36** and cylinder **30** sufficiently high to transfer the powder image of the character face to web **11**.

The grid of tridoe **119** is normally biased to cut-off potential and this bias is reduced for a short interval whenever a timed recording signal is received from the signal source. The bias is reduced for only a short interval so that the motion of cylinder **30** is insufficient to cause blurring during the period of a recording pulse. For rapidly operating equipment the pulse length may be only a few microseconds. Calculation has shown, for example, that a toner image is transferred across a 60 micron gap in about 13.4 microseconds.

The timed input pulse circuit controlling the grid of triode **119** may be similar to that shown in co-pending application Serial No. 532,534, filed September 6, 1955, by C. F. Carlson for Electrostatic Recording of Images, or any of a variety of pulse timing and distributing circuits well known in the art. Thus, as shown in FIGURE 2, a binary signal representing a given letter may be received over input circuit **121** and stored in the appropriate position in the timed input pulse circuit **122**. An iron disc **35** which is mounted on the same shaft as drum **30** has a series of slots or notches **124** around its edge in positions corresponding to the spacing of the character faces and a stationary pick-up magnet **125** is positioned at the edge of the disc to supply a pulse over conductors **123** to the pulsing circuit **122** as each slot passes the magnet. Thus, when a character signal from conductor **121** has been stored in circuit **122** the pulses from circuit **123** are counted by circuit **122** until the appropriate character comes opposite electrode **36** at which time the grid potential of triode **119** is modified by circuit **122** to produce a recording pulse for the character.

A second pick-up magnet **127** is positioned to transmit a pulse over a circuit **128** at the completion of each cycle of rotation of the drum when slot **126** passes the gap of the magnet to initiate storage of another character signal in circuit **122** for recording on the next cycle.

Suitably mounted and positioned adjacent to the surface of character faces **32** is a development material deposition device such as, for example, a rotating brush **40** or the like adapted to deposit powder material on the character face by means of bringing to the character face charged powder particles either supported on the brush fibers or otherwise carried to the surface. For example, a developer powder **27** is placed in a feed bin **28** and is carried slowly to the brush **40** by a slow-moving feed drum **29**. Suitable drive mechanism such as a worm gear **49** operated by a motor **50** may operate the feed drum, optionally working from the same drive shaft as the drive means for brush **40**.

As shown in FIGURE 3, the cylinder **30** is rotatable and may be suitably driven and synchronized by a motor **39** in coordination with suitable synchronizing means. In the preferred method of operation, cylinder **30** will be rotated one time for each movement or advance of one line of printed information on web **11**.

In FIGURE 4 is illustrated certain electrode and circuitry arrangements useful according to the invention and particularly useful in conjunction with the high speed printing device such as illustrated in FIGURE 2. According to these figures the recording device includes a motor driven rotatable drum **70** like the drum of the device in FIGURE 2 having a plurality of rings with raised insulating character faces **53** optionally arranged as numbers 0 to 9 and letters of the alphabet from A to Z. One ring of characters is provided for each column of recording and the cylinder extends generally across the printed page. At the ends of the drum are attached a pair of indexing discs **63** and **56**. Disc **56** at one end carries a singly magnetic spot **51** for the location and counting of revolutions and disc **63** at the other end carries a plurality of magnetic spots **62** for the location of characters within a revolution. One such character location spot **62** is positioned in line with each row of characters. A revolution reading coil or head **58** is mounted adjacent to the path of magnetic spot **51** and a second character reading head **64** is mounted adjacent to the path of the character magnetic spots **62**.

Adjacent to the circumference of the cylinder **70** at an impulse station are a plurality of electrodes **55** corresponding to the electrode assemblage generally designated **36** in FIGURE 2. One of such electrodes **55** is positioned opposite each of the character rings and is operably connected to electronic circuitry to provide an impulse voltage at a timed instant when a character is to be recorded. A web assembly comprising a copy web **54** is adapted to be fed between the cylinder **70** and the electrode assembly.

Means not shown, similar to those illustrated in FIGURE 2, are provided for applying toner to the insulating character faces. Desirably, the insulating material of the character faces is so selected relative to the toner in the triboelectric series as to retain the toner thereon while imparting thereto the desired electrostatic charge. Thus, the toner is removably coated on the character face by electrostatic attraction. If desired to improve the density of toner deposition, an electrostatic charge may be applied to the character face as by spraying with corona discharge of the desired polarity. It may also be desirable to apply the additional electrostatic charge to the toner-coated character face to increase the charge on the individual toner particles.

In operation when a selected character bearing thereon a layer of toner in image configuration passes over a chosen electrode the electrode is subjected to a triggered pulse. The manner of sequentially selecting the proper character ring and the particular character therein involves the use of digital computer techniques. Appropriate sensing means, such as ring counters, delay devices and the like may be employed. To illustrate one form of circuitry, the input from the computer or memory storage device is fed into a character register **67**, thence to a comparison circuit **66** with control operation from a character counter **65**. Simultaneously a revolution counter **59** feeds to a line selection matrix **60** in coordination with a signal from the comparison circuit **66**. With each of the electrodes **55** is associated a voltage amplifier **68** energized by a gating means, such as gate **61** which is selectively triggered by the comparison circuit **66** and the line selection matrix **60**.

In use and operation the electrodes are individually triggered in response to the signal from the revolution counter and character counter combined with a voltage pulse from the computer output or memory device output. Thus, the comparison circuit and revolution counter in conjunction operate the gates **61** whereby a pulse input from the computer output produces a triggering impulse to the corresponding electrode **55**.

The apparatus represented in FIGURE 4 may be employed for sequential character formation. In such an arrangement the revolution counter sequentially opens first one and then the next of the gates, for sequential character formation, and when so employed the rows of characters on the cylinder and, if necessary, the electrode assembly, desirably are skewed with respect to horizontal direction on the web assembly so as to correct for continuous vertical motion of the web assembly through the device. One such skewed arrangement is shown and described in U.S. Patent 2,776,618 to Hartley. If desired, however, the electrode assembly may be employed with a

suitable line storage memory device to produce line-by-line printing in which case skewing is unnecessary and a much higher printing speed can be achieved at the expense of more complex computer circuitry.

It will be noted that in FIGURE 1 the image-receiving copy sheet 11 is backed by grounded electrode 14 and the pulse is applied to the electrode 13. It is only necessary that the powder carrying image layer 12 be of insulating material to transmit the electric field of the electrode to the powder layer. Sheet 11 can be either insulating or conductive in this embodiment. In FIGURES 2 and 4, however, since the pulse is applied to the backing electrode, such as 36 or 55, which is separated from the electrode by web 11 or 54, respectively, the web must be insulating. If paper is used for web 11 or 54 it can be pre-conditioned prior to use by passing the web through an oven at 150 to 200 degrees C. for a few seconds. This can be done immediately ahead of the recording station in the recording apparatus itself, or the web can be pre-dried, wound up and kept in a tight container until used. Papers which are impregnated with a plastic such as cellulose acetate or nitrate do not usually require such precautions.

The apparatus and methods of the present invention are, as is readily apparent, admirably suited for computer output and for other uses and applications where high-speed printing is desired and particularly where an immediately visible record is useful. The printed record produced by the apparatus of the invention is immediately visible and available within a fraction of a second after image formation and can be produced at extremely high rates of character formation including rates at least as high as 20,000 characters per second for a 100-column page. All of these advantages are achieved with electronic circuitry that is relatively simple in the computer art.

It is apparent that numerous variations and modifications may be made in the methods and apparatus of the invention in accordance with the needs of the particular use or application. Thus, one variation would be to use liquid immersion development to apply toner to the insulating characters. In this embodiment, the characters should be recessed flush with the face of the cylinder to prevent spraying the liquid-toner dispersion out of the container. The container for the liquid would be so positioned that the cylinder such as 70 or 30 dipped into the liquid therein. The liquid, which is electrically insulating, has dispersed therein finely divided pigment particles or dyed or pigmented emulsion droplets which become electically charged due to the zeta potential. This process is described in more detail, for example, in U.S. patent application S.N. 531,280 filed August 29, 1955 by E. Ricker, now U.S. Patent 3,010,842. Desirably agitating means, as a propeller, are positioned in the bottom of the container to maintain a uniform dispersion.

The invention is therefore illustrated by but not limited to the scope of the specific disclosure.

This application is a continuation-in-part of my earlier filed copending application Ser. No. 623,327, filed November 20, 1956, now abandoned.

I claim:

1. Apparatus for converting an information bearing input electric signal into a visible recorded image comprising a rotary character drum having a bank of like character rings thereon, each ring containing a series of electrically insulating character-shaped elements in a circumferential arrangement, the respective characters in the series being representative of different values of incoming information, means for depositing a layer of electrostatically charged marking particles on said character-shaped elements by electrostatic attraction, means to rotate said drum at a constant angular velocity, a web of insulating material having an image-receiving surface in close proximity to said drum, means to advance said web tangentially relative to said drum by a distance equivalent to the dimension of said characters while said drum makes at least one complete rotation, an array of fixed electrodes, one of each disposed adjacent said web at positions corresponding to one of said rings, means sensing the relative position of said image-receiving surface and the position of said character-shaped elements, comparison means for comparing the input electrical signal with the relative position of said image-receiving surface and the character-shaped elements, means responsive to said comparison means to produce a high voltage pulse at a time coincident with the angular alignment of a preselected one of said character elements and its corresponding electrode, and means to feed said high voltage pulse to the one of said fixed electrodes corresponding to said preselected character to momentarily overcome said electrostatic attraction and thereby transfer marking particles from said selected characters to said web forming thereon a visible image in accordance with said input information.

2. Apparatus for converting an information bearing input electric signal into a visible recorded image comprising a rotary character drum having a bank of like character rings thereon, each ring containing a series of electrically insulating character-shaped elements in a circumferential arrangement, the respective characters in the series being representative of different values of incoming information, means for depositing a layer of electrostatically charged marking particles on said character-shaped elements by electrostatic attraction, means to rotate said drum at a constant angular velocity, a web of insulating material having an image-receiving surface in close proximity to said drum, means to advance said web tangentially relative to said drum by a distance equivalent to the dimension of said characters while said drum makes at least one complete rotation, an array of fixed electrodes, one of each disposed adjacent said web at positions corresponding to one of said rings, means sensing the relative position of said image-receiving surface, a revolution counter for determining the position of said character-shaped elements, comparison means for comparing the input electrical signal with the relative position of said image-receiving surface and the character-shaped elements, gating means responsive to said comparison means and revolution counter to produce a high voltage pulse at a time coincident with the angular alignment of a preselected one of said character elements and its corresponding electrode, and means to feed said high voltage pulse to the one of said fixed electrodes corresponding to said preselected character to momentarily overcome said electrostatic attraction and thereby transfer marking particles from said selected characters to said web forming thereon a visible image in accordance with said input information.

3. Apparatus for converting an information bearing input electric signal into a visible recorded image comprising a rotary character drum having a bank of like character rings thereon, each ring containing a series of electrically insulating character-shaped elements in a circumferential arrangement, the respective characters in the series being representative of different values of incoming information, means for depositing a layer of electrostatically charged marking particles on said character-shaped elements by electrostatic attraction, means to rotate said drum at a constant angular velocity, a web of insulating material having an image-receiving surface in close proximity to said drum, an indexing mechanism to advance said web tangentially relative to said drum by a distance equivalent to the dimension of said characters while said drum makes at least one complete rotation, an array of fixed electrodes, one of each disposed adjacent said web at positions corresponding to one of said rings, means sensing the position of said image-receiving surface, a revolution counter for determining the position of said character-shaped elements, comparison means for comparing the input electrical signal with the relative position of said image-receiving surface and the character-shaped elements, gating means

responsive to said comparison means and said revolution counter to produce a high voltage pulse at a time coincident with the angular alignment of a preselected one of said character elements and its corresponding electrode, means to feed said high voltage pulse to the one of said fixed electrodes corresponding to said preselected character to momentarily overcome said electrostatic attraction and thereby transfer marking particles from said selected characters to said web, and means coupled to said indexing mechanism to shift said pulse feed means sequentially to the next electrode in said array after each character recording operation thereby forming on said web a visible image of said input information.

References Cited in the file of this patent

UNITED STATES PATENTS

1,820,194	Huebner	Aug. 25, 1931
2,224,391	Huebner	Dec. 10, 1940
2,520,504	Hooper	Aug. 29, 1950
2,573,881	Walkup et al.	Nov. 6, 1951
2,576,047	Schaffert	Nov. 20, 1951
2,787,952	Roche	Apr. 9, 1957
2,805,620	Rosen et al.	Sept. 10, 1957
2,919,967	Schwertz	Jan. 5, 1960

FOREIGN PATENTS

734,909	Great Britain	Aug. 10, 1955