E. C. AULD.

COKE OVEN DOOR.

APPLICATION FILED APR. 3, 1914.

1,151,331.

Patented Aug. 24, 1915.

FIG. 2

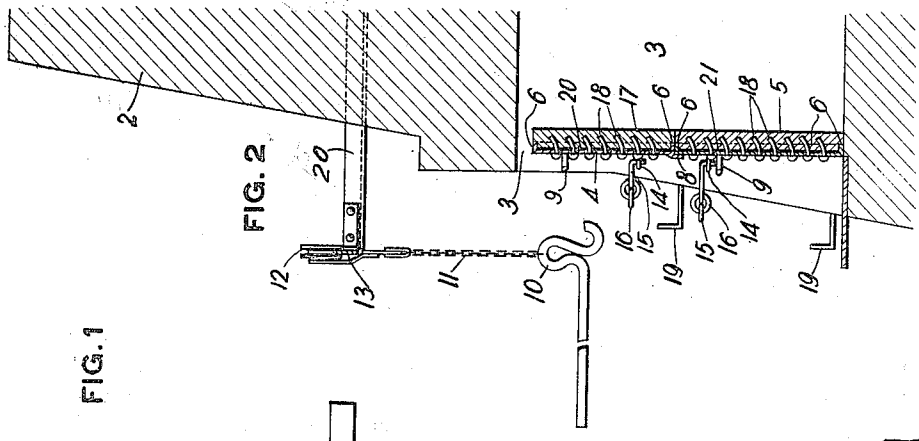

FIG. 1

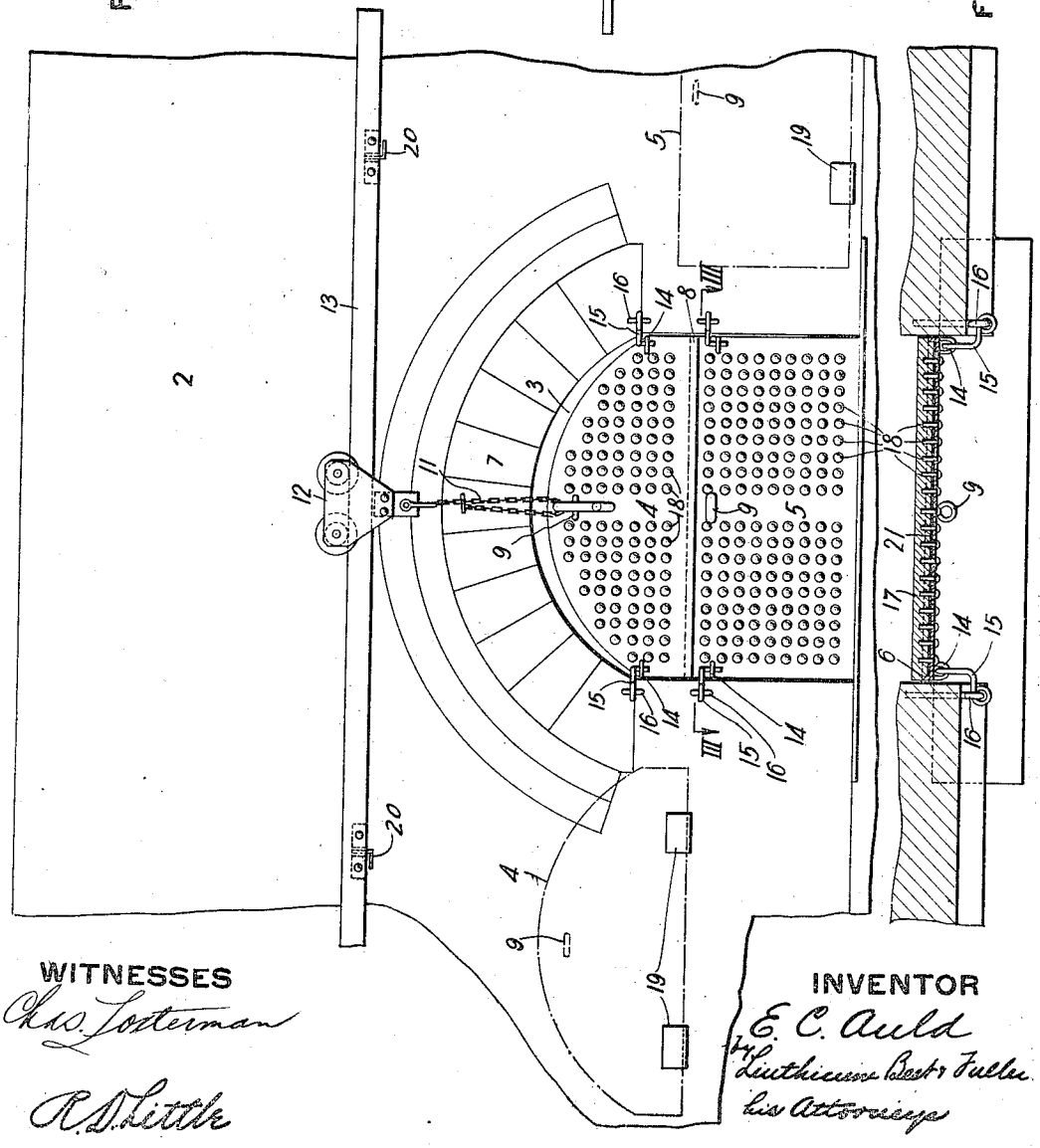

FIG. 3

WITNESSES

Chas. L. Patterman

R. D. Little

INVENTOR

E. C. Auld

by Lothrop Best & Fuller

his Attorneys

UNITED STATES PATENT OFFICE.

ELGIE C. AULD, OF SCOTTDALE, PENNSYLVANIA.

COKE-OVEN DOOR.

1,151,331. Specification of Letters Patent. Patented Aug. 24, 1915.

Application filed April 3, 1914. Serial No. 829,323.

To all whom it may concern:

Be it known that I, ELGIE C. AULD, a citizen of the United States, residing at Scottdale, in the county of Westmoreland and State of Pennsylvania, have invented a new and useful Coke-Oven Door, of which the following is a specification.

My invention has relation to the construction of doors for coke ovens and like apparatus such as metallurgical furnaces, in which high temperatures must be resisted by the doors, and the invention more particularly relates to the construction of such doors in which a refractory lining is employed and forms part of the door.

One object of my invention is to provide a door having novel means whereby the refractory lining is secured and maintained in place on the door.

Another object of my invention is to provide a door having a refractory lining and having improved means for maintaining the lining in position, which are renewable and replaceable.

Referring to the accompanying drawings forming part of this specification, Figure 1 is a front or side elevation showing a coke oven door as constructed and applied for use on a coke oven in accordance with my invention. Fig. 2 is a sectional elevation showing a sectional coke oven door as constructed and arranged and as positioned in the door opening of a coke oven in accordance with this invention, and showing the hook and trolley by which the door sections are removed from and placed in position. Fig. 3 is a sectional plan the section being taken on the line III—III of Fig. 1.

In the accompanying drawings, the numeral 2 designates a beehive coke oven having a door opening 3, the oven and door-opening or doorway being constructed in the usual known manner. Positioned within the doorway 3 is a removable door, made in sections 4 and 5 for convenience in handling when positioning within and removing the door sections from the doorway, as is done from time to time in the operation of coke ovens.

The door as shown is divided horizontally to form the top section 4 and bottom section 5, each section being provided with inwardly extending flanges 6 on its marginal edges, and the upper edge of the top section 4 of the door is curved to approximately the same curvature as the arch 7 forming the top of the doorway 2. The lower marginal edge of the top section 5 is provided with a downwardly extending flange 8 which is arranged to overlap the upper marginal edge of the bottom section 5 of the door.

An eye 9 provided in the outer face of the top section 4 forms a convenient means by which the door sections are attached to the hook or lever 10 which is suspended by a chain or other flexible connection 11 from the trolley 12 on the trolley track 13, and which is employed to place the door sections within the door opening 3 and to remove the door section therefrom. The bottom door section 5 is likewise provided with a similar eye 9 for convenience in handling.

The top section 4 and bottom section 5 of the door are also provided with eyes 14, 14, on the outer surface, near the marginal side edges thereof, which are engaged by the hooks 15, 15, which are pivoted to staples 16 fixed in the wall of the coke oven 2 and which serve to hold the door sections in position in the door opening or doorway 3 while in use in closing the doorway.

The door sections are each provided with a refractory lining 17 on the inner surface thereof, this lining being positioned within the recess formed by the inwardly extending marginal flanges on each of the door sections. The thickness of the refractory lining is such that the face of the lining extends somewhat beyond the plane of the outer edges of the marginal flanges 6 on the door sections. Preferably the lining 17 is formed of refractory material which is put in place while plastic and is then dried so as to form a monolithic door lining. A sheet of asbestos board 21 is preferably placed between the face of the door sections and adjoining inner face of the lining to form insulation between the lining and casting forming the door sections 4 and 5.

Extending horizontally in front of the oven above the plane of the top of the doorway, is the trolley track 13 for the trolley 12. Horizontal supports 20, are provided at intervals in its length for supporting the track, one end of the supports being built into or fixed in the wall of the oven 2 so as to extend outwardly therefrom for a short distance, and the track 13 being secured to the overhanging or outer ends of the supports.

The surfaces of the door sections 4 and 5 are provided with a series of openings or holes extending therethrough, and inserted in these openings is a series of pins 18 each having a head on one end, with the other ends of the pins projecting into the recess for the lining 17 in the opposite face of the door sections. In order to prevent the ready removal of the pins, and, more particularly, to more securely hold the refractory lining in place, the pins 18 are curved lengthwise and preferably are positioned in the openings to curve upwardly when in place.

A pair of horizontally extending lugs or hooks 19, 19, are built into the wall of the oven 2 on one side of the doorway 3 so as to project outwardly from the face of the wall to receive and support the upper section 4 of the door when it is removed from its position within the door opening. Similarly formed hooks or lugs 19 are provided on the opposite side of the door opening to conveniently support the bottom section 5 of the door when it is not positioned within the doorway, as is the case during the removal of coke from the oven.

The advantages of my invention will be apparent to those skilled in the art. By providing the removable pins which are readily renewed when required, the lining is securely held in place on the door sections, and the pins when burned off are removed and replaced by new pins, so that the necessity of discarding the door frame when the pins are burned off after extended use is avoided and overcome and the life of the door is thereby greatly lengthened.

Modifications in the construction and arrangements of the parts may be made without departing from my invention as defined in the appended claims.

The use of the removable pins forming a novel feature of my invention may be employed with existing door constructions, by supplying the necessary holes at separated intervals in the surface of the doors.

The novel features of my invention are applicable to furnace doors generally, and are not restricted to coke oven doors of the construction shown.

I claim;

1. A door frame for coke ovens and the like, comprising in combination, a metal frame having recessed inner face, a series of holes extending from the outer to the inner face of said frame, a refractory lining in said recess, and detachable pins having heads on the outer ends thereof and projecting through said holes into frictional holding engagement with said refractory lining.

2. A door frame for coke ovens and the like, comprising in combination a metal frame having a recess in the inner face thereof, a series of holes extending through the metal frame from the outer to the inner face thereof, a refractory lining in said recess, and lengthwise curved detachable pins having heads on one end and projecting through said holes into holding engagement with the lining, said pins being secured in said holes by frictional engagement with said lining.

In testimony whereof, I have hereunto set my hand.

ELGIE C. AULD.

Witnesses:
W. S. WILEY,
J. W. WILEY.

Copies of this patent may be obtained for five cents each, by addressing the "Commissioner of Patents, Washington, D. C."