United States Patent

[11] **3,529,580**

[72] Inventor **William D. Stevens**
North Caldwell, New Jersey

[21] Appl. No. **769,782**
[22] Filed **Oct. 23, 1968**
[45] Patented **Sept. 22, 1970**
[73] Assignee **Foster Wheeler Corporation**
Livingston, New Jersey
a corporation of New York

[54] **START-UP SYSTEM**
9 Claims, 1 Drawing Fig.

[52] **U.S. Cl.** **122/406**
[51] **Int. Cl.** **F22b 29/06**
[50] **Field of Search** 122/406, 406S, 406SU

[56] **References Cited**

UNITED STATES PATENTS

3,338,055 8/1967 Gorzegno et al. 122/406X
3,361,117 1/1968 Batyko 122/406
3,362,164 1/1968 Rudd 122/406X

Primary Examiner—Kenneth W. Sprague
Attorneys—Constantine A. Michalos, John Maier III and Marvin A. Naigur

ABSTRACT: A once-through vapor generator which comprises a main flow path including inlet and outlet ends and heating surfaces between said ends. Heat recovery surfaces are positioned upstream of the main flow path inlet end, the generator further comprising a start-up bypass system which leads from the main flow path to the heat recovery surfaces. The bypass system includes first and second conduit means in parallel, the first of said conduit means including a flash tank, the second of said conduit means leading directly to said heat recovery surfaces and being valved so that the bypass flow from said main flow path is apportioned during start-up between said flash tank and said second conduit means.

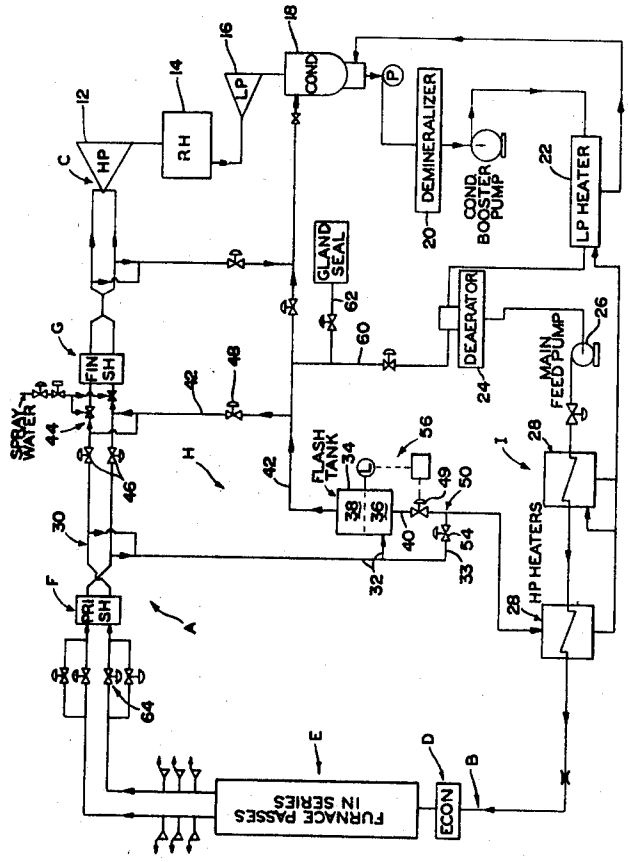

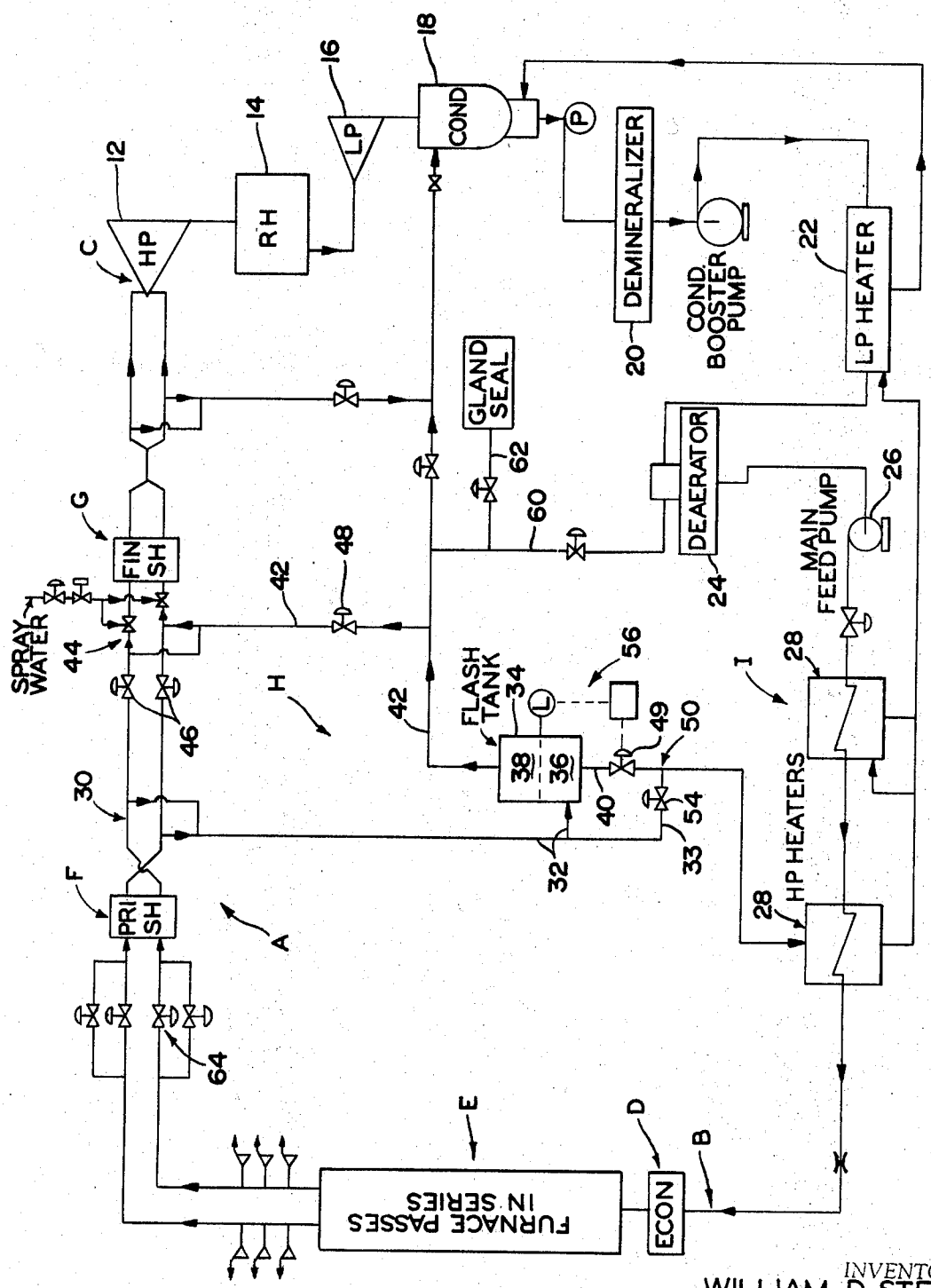

INVENTOR.
WILLIAM D. STEVENS

BY
Meyer, Tilberry & Body
ATTORNEYS.

START-UP SYSTEM

The present invention relates to a once-through vapor generator, and in particular to a novel start-up bypass system for a once-through vapor generator.

A typical once-through vapor generator, of the type to which the present invention pertains, will include an inlet end and an outlet end, with a plurality of heat transfer surfaces between the ends. As a general rule, these will include an economizer pass, furnace passes defining the high temperature radiant heat transfer portion of the generator, and primary and finishing superheating passes, the outlet end of the generator being connected to a suitable point of use such as a high pressure turbine. The exhaust flow from the turbine or turbines is transmitted to condensing means, a deaerator, and from there through heat recovery surfaces to the inlet end of the generator.

During start-up of the vapor generator, the low enthalpy fluid cannot be handled by the high pressure turbine, and for this reason, the generator usually is provided with a bypass system to handle the flow until the flow is at the enthalpy level required by the turbine. It is known to transmit this flow to heat recovery surfaces where it is passed in heat exchange with the feed flow to the vapor generator inlet end. It is also known to position a flash tank or separator in the bypass system designed to separate the flow entering the bypass system into vapor and liquid streams and to transmit the vapor stream back to the main flow path for warming and rolling the high pressure turbine. Other uses are known for the bypass flow, including turbine gland sealing, and pegging the deaerator.

Depending upon the design of the vapor generator, there may be no flow during at least the initial stages of start-up through certain surfaces, for instance the reheater surfaces of the generator, and perhaps even through primary and finishing superheating surfaces. These surfaces usually are positioned in lower temperature or convection heating zones, so that during the initial stages of start-up, cooling of the surfaces is not necessary. Accordingly, the bypass system usually is connected to the main flow path upstream of at least the finishing superheater surface. This has the advantage that the vapor flow returned to the main flow path from the bypass system flash tank or separator can be subjected to further heating and superheating for earlier warming and rolling of the high pressure turbine, reducing the start-up period.

During start-up of a once-through vapor generator, it is important to control the manner in which the surfaces exposed to radiant heat transfer are cooled. As a rule of thumb, it generally is considered necessary that at least 30 percent of the full-load flow be passed through the radiantly heated surfaces to adequately cool them.

One problem experienced with conventional bypass systems is that as the vapor generators become larger in size, and of much larger capacity, the bypass systems of necessity must be designed to handle ever greater quantities of flow; that is, the 30 percent minimum flow becomes increasingly greater. The flash tanks or separators positioned in the bypass systems also must be capable of handling the increased flows as capacities of the generators increase, and since these flash tanks or separators are heavy walled vessels designed to withstand high pressures, and temperatures, it is apparent that the separators or flash tanks become major items in the capital costs of the generator, particularly in the cost of the bypass system. It is known, to use a plurality of smaller sized flash tanks or separator vessels in place of one large very heavy walled vessel. However, whether one or several vessels are used, the expense of this part of the generator is high and can be out of proportion.

A further disadvantage experienced with conventional bypass systems concerns switch-over of flow from the bypass system to the main flow path at the point in the start-up period when the bypass system is isolated from the flow. Although the bypass systems and flash tanks or separators can be designed to handle flows up to full operating pressures and temperatures in a once-through vapor generator, which may be in the order of 3,600 lbs. per square inch and about 1,100°F., respectively, economics (as discussed above) dictate that the bypass system be designed for and utilized up to only about 1,000 lbs. per square inch, at which time or point in the start-up period the flow is switched over to the main flow path. Since the bypass system is positioned upstream of one or more of the superheating sections, for shorter start-up time, there usually is insufficient surface upstream of the bypass system to produce a fully vaporized flow at the normal switch-over pressure of about 1,000 lbs. per square inch, at this point in the start-up period. The result is that the surfaces downstream of the bypass system, which prior to switch-over, will have received a vapor flow from the flash tank or separator, will now receive a vapor-liquid mixture flow from the upstream surfaces, resulting in a temperature drop in the surfaces downstream of the bypass system and a temperature shock to these surfaces.

Elaborate control schemes have been devised to avoid this temperature shock.

It is an object of the present invention to overcome the above problems, and in particular to provide a simplified bypass system of reduced capital cost, capable of avoiding the temperature shock experienced in conventional systems during switch-over from bypass to main path flow.

In accordance with the present invention, there is provided a once-through vapor generator comprising a main flow path including an inlet end, an outlet end leading to a point of use, and heating surfaces between said inlet and outlet ends. Heat recovery surfaces are positioned upstream of the inlet end, and a bypass system leads from said main flow path to said heat recovery surfaces for heat exchange therein. The bypass system includes first and second conduit means connected to said main flow path, the first of said conduit means including flash tank means (or separator), a vapor return line leading from said flash tank means to said main flow path; and a liquid drain line leading from said flash tank means to said heat recovery surfaces; said second conduit means leading directly to said heat recovery surfaces and including valve means therein so as to apportion the flow from said main flow path between said first and second conduit means.

In a preferred form of the invention, the flash tank means is exposed to main flow path pressure at all times, the first conduit means being provided with a continuously open connection between said main flow path and flash tank means.

In a further preferred embodiment in accordance with the invention, the first and second conduit means are both connected to the main flow path at the same point upstream of at least the finishing superheating surface thereof.

As a further preferred embodiment, the flash tank means is sized to have a minimum capacity sufficient to produce the amount of vapor flow to the turbine required for warming and rolling the turbine at that point in the start-up period when the enthalpy of the flow has increased to the extent that the flash tank or separator goes dry.

Preferably, the main flow path is provided with a shutoff valve between the points of connection of the first conduit means and the vapor return line to the main flow path. A level control in the flash tank shuts the liquid drain line from the flash tank and simultaneously opens the shutoff valve in the main flow path when the flash tank approaches or reaches dryness.

It will be apparent that the present invention offers considerable economics in capital costs of the generator, and particularly of bypass systems for large capacity generators, and further avoids the temperature shocks experienced with conventional bypass systems. In addition, the present invention offers substantial savings by reducing the complexity and number of controls required for start-up and bypass of flow during the start-up period.

The invention and other advantages thereof will become more apparent upon consideration of the following specification, with reference to the accompanying drawings, in which:

The figure is a schematic drawing of a vapor generator flow circuit and bypass system in accordance with the present invention.

Referring to the drawing, wherein the showings are for the purpose of illustrating the preferred embodiment of the invention only and not for the purpose of limiting the same, the figure shows a once-through vapor generator flow circuit which comprises a main flow path A including an inlet end B and an outlet end C, between which are disposed heating surfaces including an economizer surface D, furnace passes E, primary superheating surface F and a finishing superheating surface G. A bypass system, designated by the letter H, extends between the main flow path, from a point intermediate the primary and finishing superheating surfaces to heat recovery surfaces or a heat recovery area I, the latter being disposed upstream of the inlet end B of the generator main flow path.

The furnace passes E preferably will include a plurality of parallel vertically oriented tubes defining a rectangular furnace chamber. Headers at the bottom of the chamber will distribute the flow from the economizer surface D to at least certain ones of the parallel tubes, and the headers may be arranged with a plurality of downcomers so that the flow in the furnace section will make several passes in series before exiting to downstream surfaces for further heating. For the purpose of illustration, it will be assumed that the connections from outlet headers for the final furnace pass will direct the flow to the primary superheating surface F, which may have sections in either or both the radiant and convection portions of the generator. From the outlet of the primary superheating surface F, the flow is directed to the finishing superheater G and from there to a high pressure turbine (item **12**) via outlet end C of the generator.

The arrangement of surfaces forms no part of this invention, and various arrangements are well known and within the scope of the present invention. However, for the purpose of illustrating the present invention, the primary superheater and surface upstream thereof are so located in the generator as to require cooling during start-up, whereas the finishing superheater and surface downstream thereof can remain dry at least during the initial stages of start-up.

From the high pressure turbine **12**, the exhaust flow is transmitted to a reheater **14**, which will usually comprise a bank or banks of tubes in the convection area of the generator, and following reheating, the flow is transmitted to a low pressure turbine **16** and from there to a condenser **18**. From the condenser, the flow may go to a suitable demineralizer **20**, a plurality of low pressure heaters **22**, a deaerator **24**, and from there to a feed water pump **26**; where it is pressurized for passage through a plurality of high pressure heaters **28** and flow into the inlet end B of the generator. The specific arrangement of components between the condenser and furnace section inlet end also is subject to design criteria, and may be varied based on these criteria. However, the above description is a representative layout of components, the high and low pressure heaters constituting the heat recovery area I of the generator. For the purpose of describing the present invention, the high pressure heaters **28** will be considered the primary heat recovery surface.

During start-up of the generator, in order to insure a minimum safe velocity of the working fluid through the furnace passes E and primary superheater F, or other upstream surface exposed to radiant heat transfer, it is necessary to have in these surfaces a through-flow quantity of at least about 30 percent of maximum flow, towards safeguarding the surfaces against burn-out.

By the same token, this initial flow of working fluid cannot be handled by the high pressure turbine **12**, and perhaps certain downstream surfaces exposed to convection heat transfer, particularly if they are in pendant form, so that a bypass must be provided connected to the main flow path downstream of the surfaces which are to be protected. In the embodiment shown the bypass system, item H, is connected to the main flow path at a point **30** downstream of the furnace passes and primary superheater and upstream of the finishing superheater; and leads to the high pressure heaters **28**.

In accordance with the invention, the bypass system H comprises a first conduit **32** leading to a flash tank or separator **34**, the latter being of known design, and a second conduit **33** which bypasses the flash tank or separator. Turning first to the conduit **32**, the flash tank or separator preferably is provided with a liquid space **36** and a vapor space **38**, the flow of fluid into the flash tank flashing into separate vapor and liquid phases. From the liquid area of the flash tank, a suitable liquid drain line **40** is provided leading to the high pressure heaters **28**, and from the vapor space of the flash tank, a suitable vapor line **42** is provided connected to the main flow path A at a point **44** downstream of the first bypass point of connection **30**, but still upstream of the finishing superheater.

Preferably shut-off valves **46** are provided in the main flow path A between the first and second points of connection, **30** and **44**, so that the fluid flow in the main flow path from the furnace and primary superheating surfaces can be directed alternatively through the conduits **32** and **33**, or directly to the finishing superheater G.

The vapor line **42** leading from the flash tank to the main flow path is suitably valved with a shut-off valve **48** to control or terminate the flow in this conduit, as is the liquid drain line **40** with shut-off valve **49**.

As shown, the first conduit **32** leading from the main flow path to the flash tank preferably is unvalved or continuously open, so that the flash tank is exposed throughout operation of the generator to generator pressures. It will be apparent that among other aspects of the invention, this constitutes a substantial savings in the cost of the bypass system, *i.e.*, eliminating the cost of a normally critical valve and controls associated therewith.

The second (bypass or branch) conduit **33** leads from the first conduit **32** around the flash tank **34** to the drain line **40**, connected to the latter at a point of connection **50** which is on the heat recovery surface side of drain line valve **49**. Flow into the second conduit **33** is directly into the high pressure heaters or heat recovery surface I. In the second (bypass) conduit **33**, flow control valve **54** is positioned for shut-off and control of the flow therein.

As alternatives, the second conduit **33** can be connected directly to the main flow path at or adjacent to the point of connection **30** of the first conduit, and can be connected directly to the high pressure heaters.

Further aspects of the start-up system of the present invention require brief mention. Leading from the flash tank vapor space in accordance with conventional practice are branch valved vapor conduits **60** to the deaerator and **62** to the turbine gland seals. In addition, main pressure reducing valves **64** are employed, in this example located in the main flow path between the furnace circuits E and the primary superheater F, designed to reduce the pressure of the flow during the start-up period downstream of the furnace circuitry, and maintain the radiantly heated furnace circuitry at high pressure. This optimizes the distribution of flow in the furnace circuitry for optimum cooling of the same, and at the same time permits a transfer of heat in the primary superheater at a lower pressure. It also permits flashing of the flow into the flash tank.

In operation, the generator feed water pump **26** is first started (in the start-up period) directing a flow at full furnace pressure into the furnace passes E, and the generator is fired at a predetermined firing rate. The flow from the furnace passes is reduced in pressure by pressure reducing valves **64** to a predetermined pressure, perhaps 1,200 psi, and then is further heated in the primary superheater F at the lower pressure. Shut-off valves **46** in the main flow path are closed and the flow is diverted to the bypass first and second conduits **32**, **33** apportioned between the conduits as desired (by means of valves **54**, **48**, **49**) and depending upon design factors.

While the flow is in a liquid state at the outlet end of the primary superheater, apportioning the flow is accomplished by suitably adjusting the valve **54** in the second conduit **33** relative to the position of the drain line valve **49** from the flash tank, the latter being controlled via control means **56** by the level of the liquid in the flash tank. Vapor line valve **48** is closed.

As heating is continued, the enthalpy of the fluid at the exit end of the primary superheater increases and vapor is generated in the flash tank. Initially, this vapor passes to the deaerator and turbine gland seals via conduits **60** and **62**, but as more vapor is flashed, the valve **48** in vapor line **42** from the flash tank is opened for flow of vapor to the finishing superheater and turbine inlet end. The flow is still apportioned between the first and second conduits **32** and **33**.

Ultimately enough vapor is generated in the flash tank **34** to roll the turbine, and at this point, the pressure reducing valves **64** can be opened increasing the pressure downstream of furnace passes to full load pressure; also increasing the pressure in the flash tank to full load pressure.

This ramps the turbine inlet pressure up to full operating pressure, during which the turbine is loaded.

Ramping of the pressure may be up to about 5 to 15 percent loading or some other value, so that only about 5 to 15 percent of the flow, or some other fraction of the full load flow, need be during this start-up period through the flash tank to the turbine inlet end, the remainder of the 30 percent flow being through the second conduit to the heat recovery area I.

Initially during opening of the pressure reducing valve **64** and ramping of the pressure at the turbine inlet end, the flow from the primary superheater is in a vapor and liquid state, separation of the flow into vapor and liquid phases occurring in both the flash tank and high pressure heaters. The latter may have a design as set forth in U.S. Pat. No. 3,183,896, Lytle et al., assigned to assignees of the present application for accomplishing this separation.

As the enthalpy of the flow increases, the flash tank **34** goes to dryness. At this point the shut-off valve **46** in the main flow path is manually or automatically gradually opened and at the same time the first and second conduit valves **48**, **49**, and **54** respectively are closed so that the total start-up flow is directly to the finishing superheater and turbine inlet. Not only does this remove the bypass system from operation, but it also increases the loading on the turbine.

Advantages of the invention should now be apparent.

Conventionally, the flash tank must be sized to handle the full bypass flow from the main flow path, which could amount to 30 percent of maximum flow. As generator capacities increase, immense flash tanks may be required; or alternatively, banks of smaller sized flash tanks. In any event, substantial capital outlays for equipment become necessary. Valves and connections to the flash tank must be sized to handle the large flows, further contributing to the capital outlay.

In contrast thereto, the present invention provides a start-up system wherein the flash tank need be sized only to accommodate a relatively small through-flow quantity, for instance 5 to 15 percent of through-flow, or that amount required for warming and rolling the turbine, the remainder of the bypass flow being distributed through the second conduit **33** to the high pressure heaters or heat recovery surfaces.

It is also apparent that the present invention avoids the shock to the finishing superheater conventionally experienced with start-up systems, in that switch-over to the main flow path is delayed until a vapor state exists at the outlet end of the primary superheater. This can be at full load pressure and therefor any point in the start-up period since the flash tank being sized at about one-third or less of normal capacity, can economically be designed to operate at full load pressure. Accordingly a safe switch-over to main path flow is accomplished, at any desired point in the start-up period, without delaying the loading of the turbine.

In addition, the first conduit to the flash tank can be unvalved, so that the flash tank is exposed throughout operation to full generator pressure. This constitutes an obvious savings in the cost of the generator by eliminating an expensive valve and controls associated therewith.

With respect to controls, it should also be apparent that the invention offers a substantially simplified start-up system requiring fewer and less complicated controls.

Although the invention has been described with respect to a specific embodiment, variations and other advantages within the scope of the following claims will be apparent to those skilled in the art.

I claim:

1. A once-through vapor generator comprising:

a main flow path including, in series flow relationship, vapor generating surface and vapor superheating surface, the latter being connected to a point of use;

heat recovery surface upstream of said vapor generating surface;

a bypass system bypassing at least said point of use connected between said main flow path and said heat recovery surface operatively connected with said main flow path at a point of connection upstream of at least a portion of said vapor superheating surface;

said system including flow receiving and vapor separation means;

the improvement comprising bypass conduit means in flow communication with said main flow path point of connection leading to said heat recovery surface around said flow receiving and vapor separation means; and

flow control valve means in said bypass conduit means whereby the flow in said main flow path can be apportioned between said flow receiving and vapor separation means and said bypass conduit means.

2. A vapor generator according to claim **1** including stop valve means in said main flow path between said point of connection and the vapor superheating surface downstream thereof.

3. A vapor generator according to claim **2** further including a first bypass line which operatively connects said flow receiving and vapor separation means with said main flow path, said point of connection being a first point of connection; and vapor conduit means between said flow receiving and vapor separation means and said main flow path, at a second point of connection downstream of said stop valve means.

4. A vapor generator according to claim **1** wherein said flow receiving and vapor separation means is a flash tank and is exposed to main flow path operating pressure during full operation of said vapor generator.

5. A generator according to claim **4** wherein said main flow path includes pressure reducing means, and superheating surface between said pressure reducing means and said first point of connection.

6. A once-through vapor generator-turbine combination comprising:

a main flow path including, in series flow relationship, vapor generating surface and at least primary and secondary vapor superheating surfaces;

an outlet end, the turbine being connected with said outlet end;

heat recovery surface between said turbine and said vapor generator inlet end;

a first bypass conduit connected to said main flow path at a first point of connection upstream of at least said finishing superheater surface including flash tank means therein;

stop valve means in said main flow path downstream of said point of connection;

vapor conduit means between said flash tank means and said main flow path connected to the latter at a second point of connection downstream of said stop valve means;

liquid conduit means connected to said flash tank means leading to said heat recovery surface; and

the improvement comprising second bypass conduit means operatively connected between said first point of connection and said heat recovery surface, said second bypass conduit means comprising valve means therein whereby the bypass flow from said main flow path can be apportioned between said flash tank means and said second bypass conduit means.

7. The generator of claim **6** wherein said flash tank means is sized to have a capacity sufficient to produce the amount of

vapor flow to the turbine, required for warming and rolling the turbine, at that point in the start-up period when the enthalpy of the flow has increased to the extent that the flash tank means goes dry.

8. The generator of claim 6 wherein said vapor generator surface includes a plurality of furnace passes in series flow relationship.

9. A method for start-up and low load operation of a once-through vapor generator of the forced flow type which includes a main flow path having generator furnace circuitry in series flow relationship with superheating circuitry thereof, the latter being connected to a turbine; heat recovery surface upstream of said generator furnace circuitry; comprising the steps of:

establishing a minimum flow rate required for cooling the generator furnace circuitry at the operating pressure for the generator;

firing the generator at a reduced firing rate;

reducing the pressure of the flow at a point in the circuitry intermediate heating surfaces thereof;

separating the vapor content from the reduced pressure fluid, and transmitting the separated vapor to the turbine and the separated liquid at least in part to the heat recovery surface, the amount of reduced pressure fluid subjected to said separating step being a function of the warming and rolling requirements of the turbine, less than the minimum flow required for cooling the generator furnace circuitry; and

the remainder of said minimum flow being diverted directly to the heat recovery surface without separation.