United States Patent [19]

Duchin

[11] **Patent Number: 4,683,635**

[45] **Date of Patent: Aug. 4, 1987**

[54] **TAG DISPENSING AND ATTACHING METHOD AND APPARATUS**

[75] Inventor: **Daniel Duchin,** Long Island City, N.Y.

[73] Assignee: **Monarch Marking Systems, Inc.,** Dayton, Ohio

[21] Appl. No.: **829,579**

[22] Filed: **Feb. 14, 1986**

Related U.S. Application Data

[60] Division of Ser. No. 654,062, Sep. 25, 1984, Pat. No. 4,610,384, which is a continuation-in-part of Ser. No. 553,080, Nov. 18, 1983, Pat. No. 4,610,385.

[51] **Int. Cl.**[4] **B23P 11/00**

[52] **U.S. Cl.** **29/432;** 221/248; 227/67

[58] **Field of Search** 221/248; 227/67, 68, 227/19, 79, 80, 95, 120, 156; 29/432

[56] **References Cited**

U.S. PATENT DOCUMENTS

3,734,375	5/1973	Bone et al.	227/67
3,880,339	4/1975	Bone	227/8
3,896,713	7/1975	Mayo	227/67 X
4,049,179	9/1977	Jenkins	227/67
4,237,779	12/1980	Kunreuther	227/67 X
4,315,587	2/1982	Ritter et al.	227/67
4,323,183	4/1982	Duchin	227/67 X

FOREIGN PATENT DOCUMENTS

91410	12/1983	European Pat. Off. .
53-38998	10/1978	Japan .
55-16544	9/1980	Japan .
57-16824	4/1982	Japan .

Primary Examiner—Paul A. Bell
Attorney, Agent, or Firm—Joseph J. Grass

[57] **ABSTRACT**

First and second separately actuatable triggers are mounted to a housing which carries a hollow needle through which a fastener is dispensed. The needle is mounted to the housing for movement between original and extended positions. The article to be tagged is situated adjacent the front of the housing. When the first trigger is depressed, a tag is moved from a stack on the housing into alignment with the needle as the needle is moved forward to pierce the tag and article. Also, a fastener is fed into the needle. When the second trigger is depressed, the fastener is moved through the needle such that the T-bar end is situated behind the article and the needle retracts to its original position. The apparatus is pulled away from the article, leaving the tag affixed by the fastener. The apparatus is light-weight, easily manipulatable, and can be operated by a single hand.

9 Claims, 30 Drawing Figures

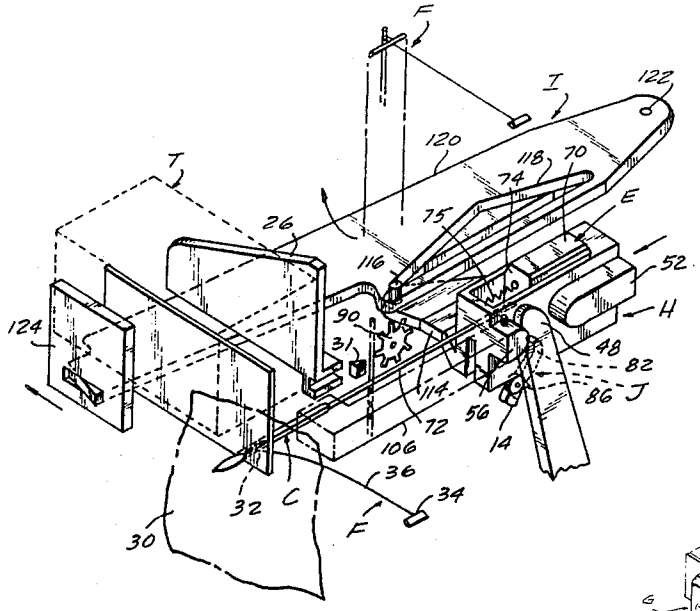

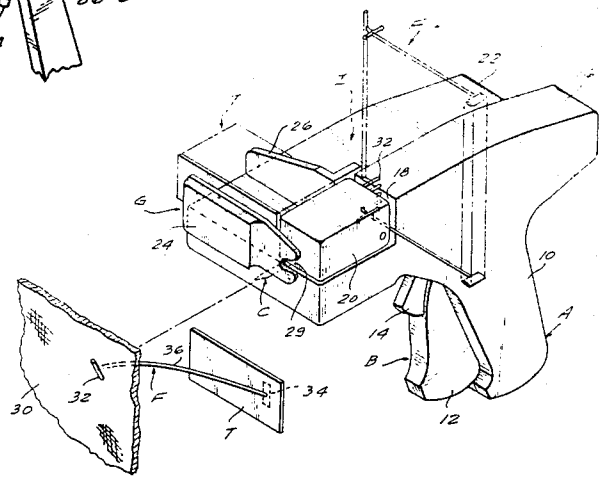

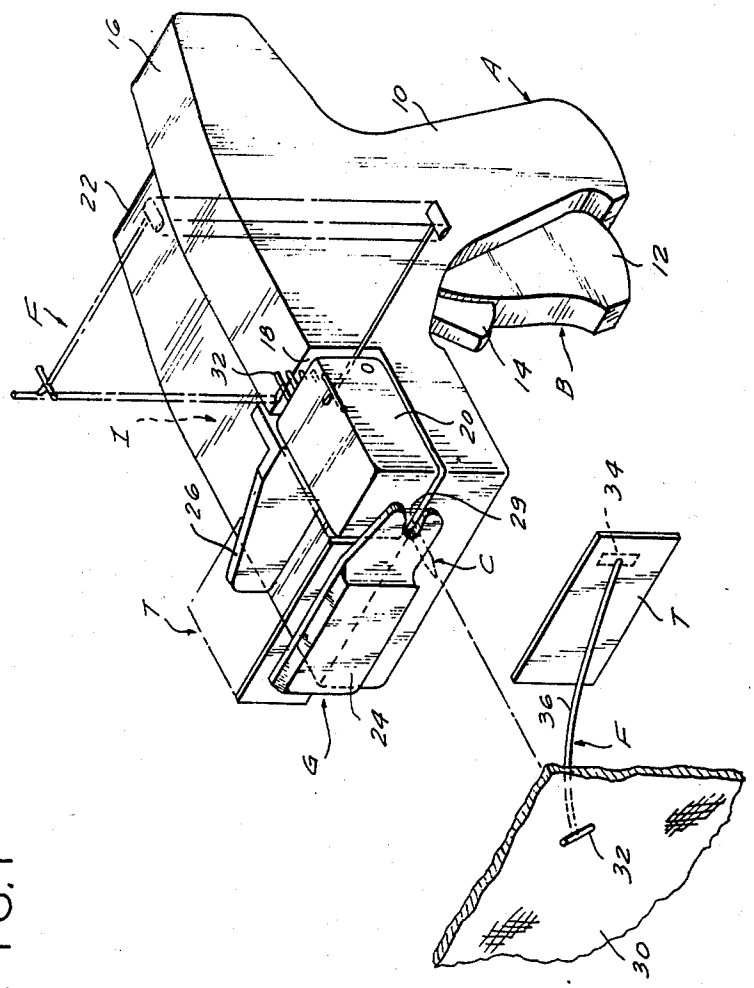

FIG. 1

FIG. 2

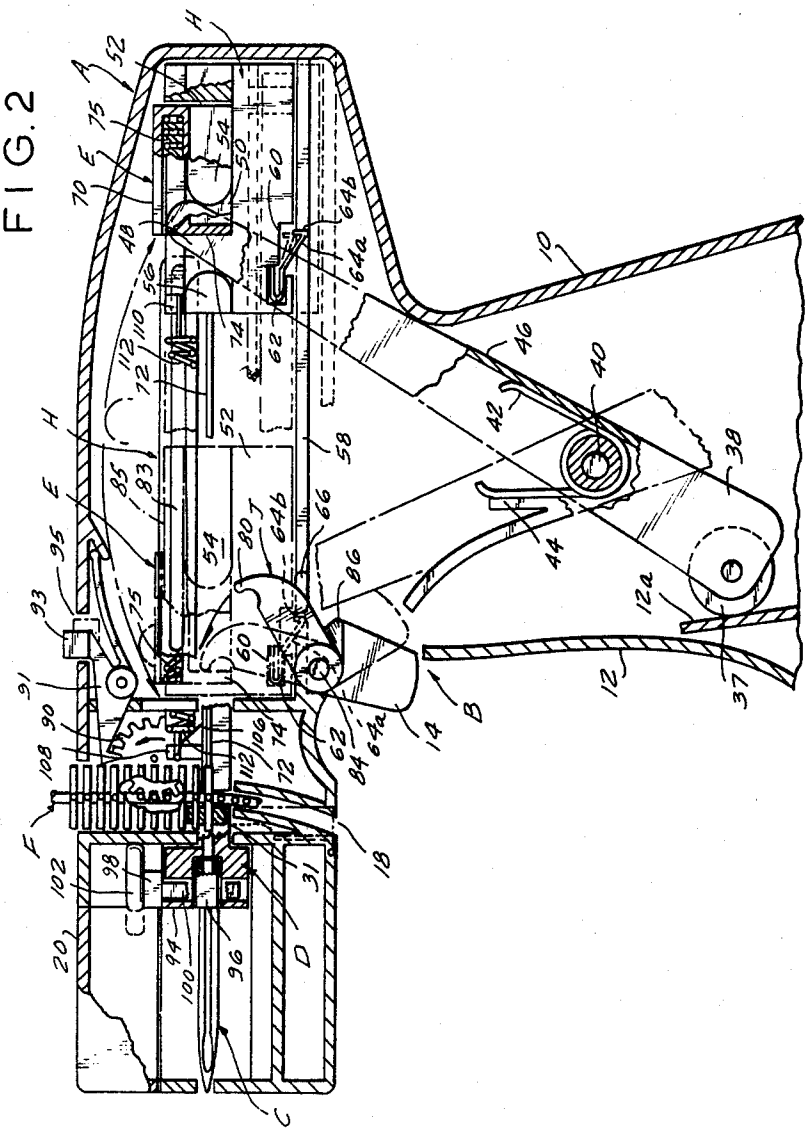
A
H
52
75
E
70
48
50
54
60
64b
64a
10
56
110
112
72
74
62
46
40
42
38
H
85
83
52
58
E
95
54
80
T
64b
66
44
93
75
86
12a
91
60
12
37
90
106
74
62
14
B
108
112
72
84
64a
F
18
102
98
31
20
94
96
D
100
C

FIG. 3

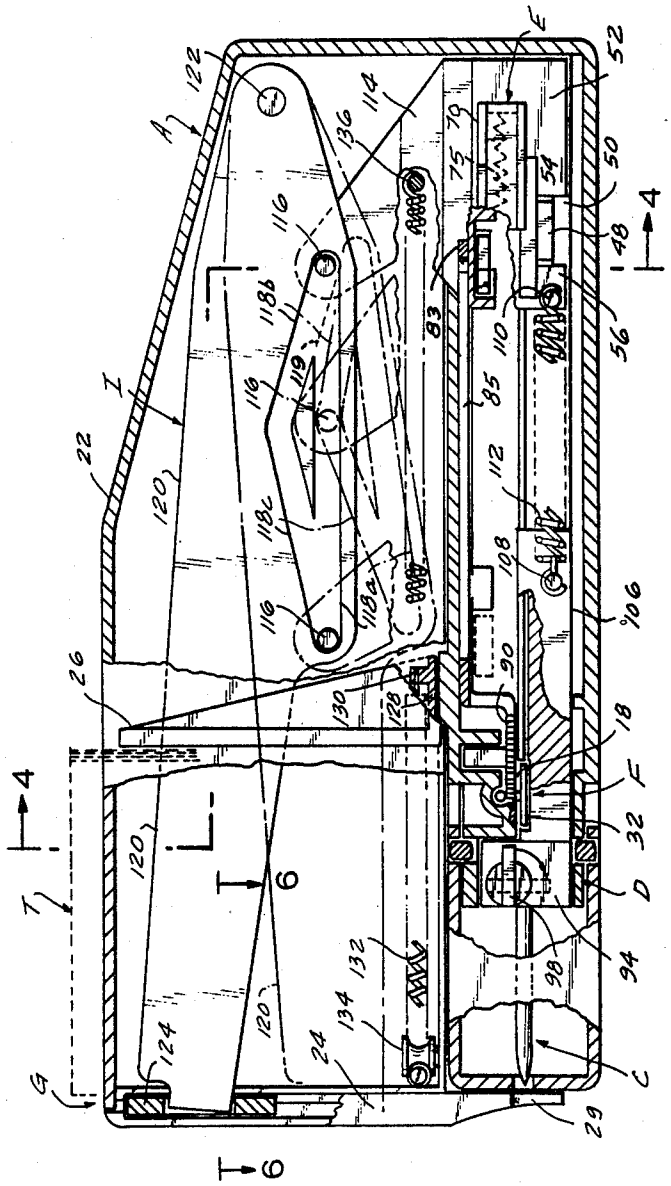
A
I
22
120
26
T
G
124
4
6
122
116
118b
118a
119
136
114
130
128
132
134
24
83
85
79
75
54
52
50
48
56
110
112
108
106
90
18
F
32
D
94
98
C
29
E

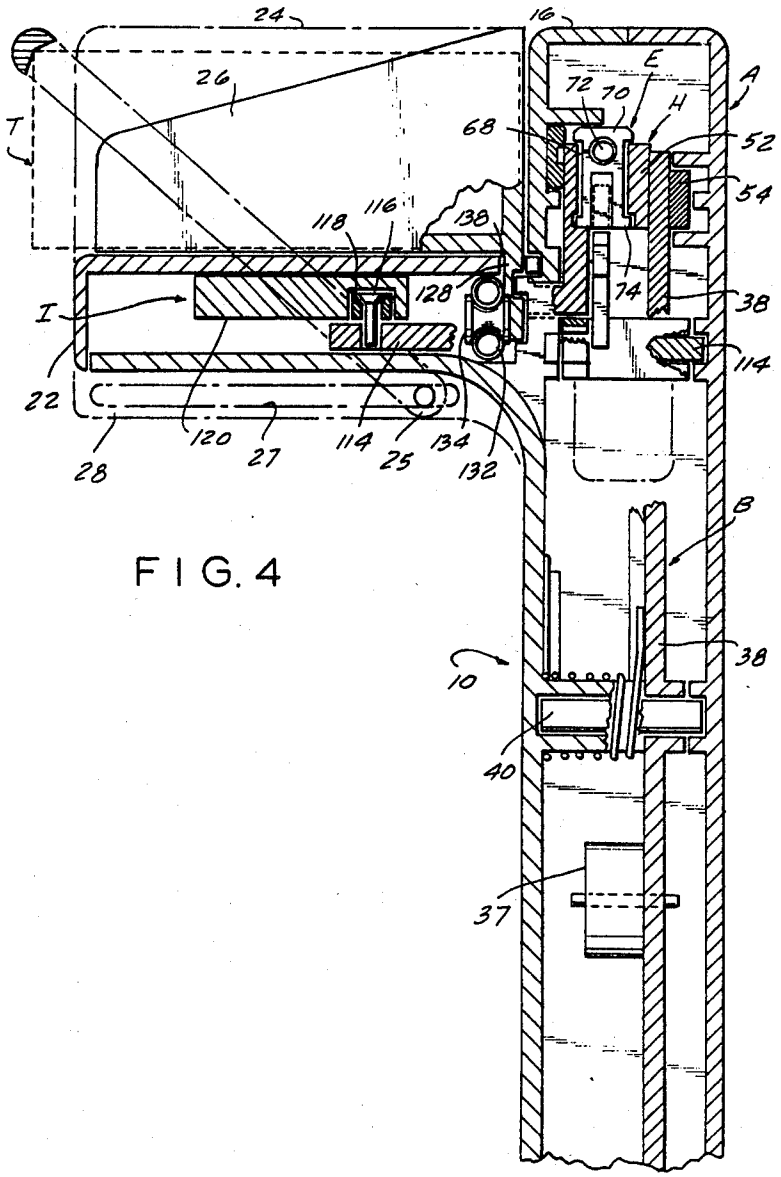
24
16
26
E
72
70
H
A
T
68
52
54
118
116
138
128
74
38
I
114
22
120
27
114
25
134
132
28
B
38
10
40
37

FIG. 4

FIG. 5

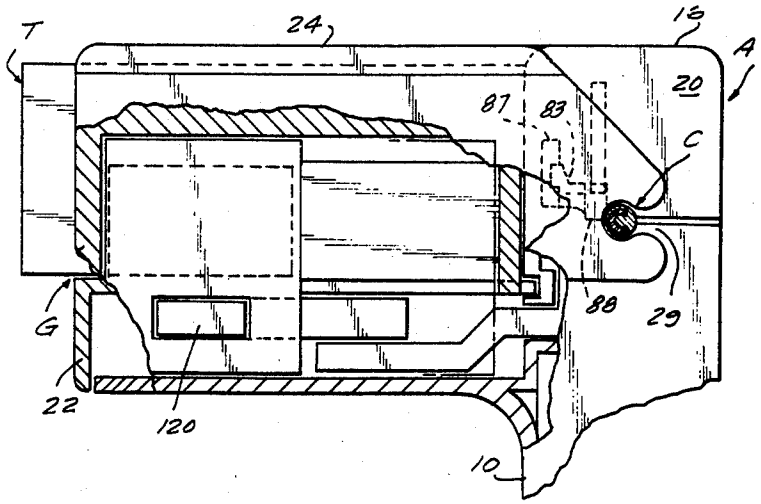
T
24
16
A
20
87
83
C
G
88
29
22
120
10

FIG. 6

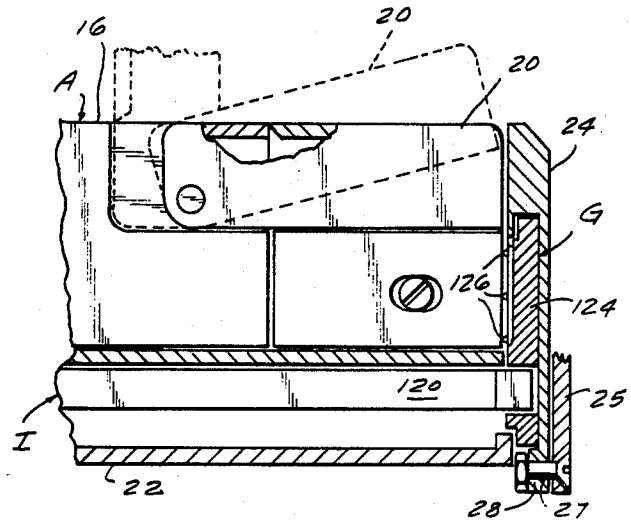
16
20
20
A
24
G
126
124
120
25
I
22
28
27

FIG. 7

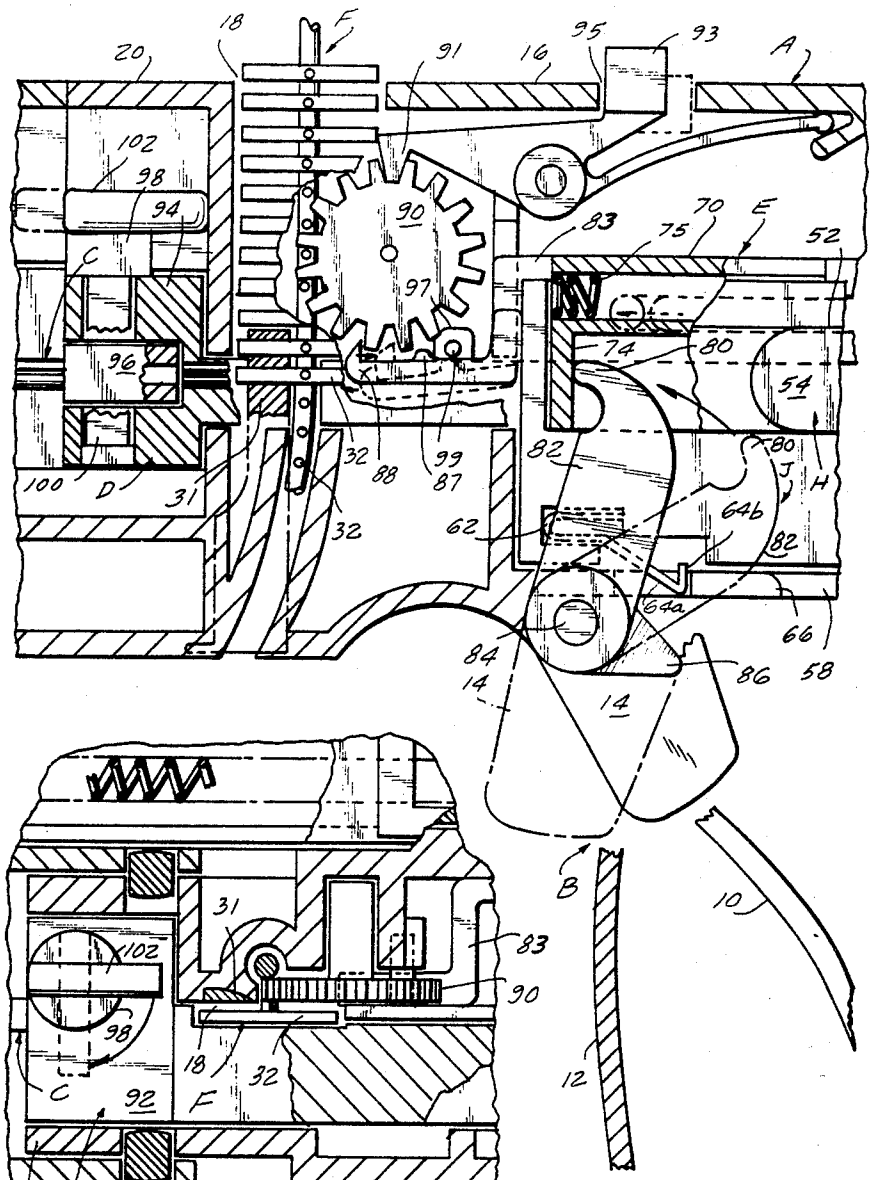
18
F
20
91
16
95
93
A
102
98
94
90
83
75
70
E
52
C
97
74
80
54
96
32
88
99
87
82
80
J
H
100
D
31
32
62
64b
82
64a
66
84
86
58
14
14
B
10
12

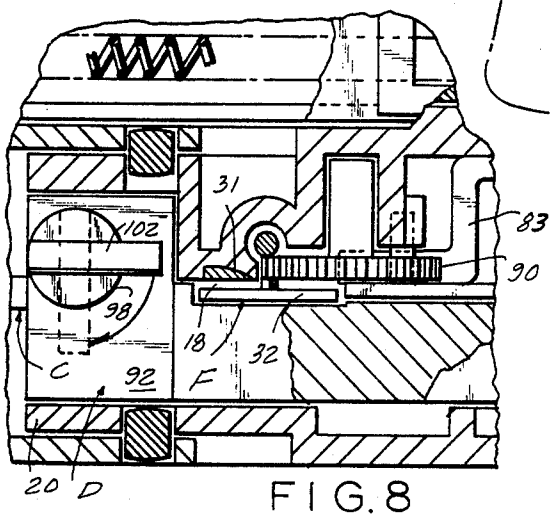
31
102
83
90
98
18
32
C
92
F
20
D

FIG. 8

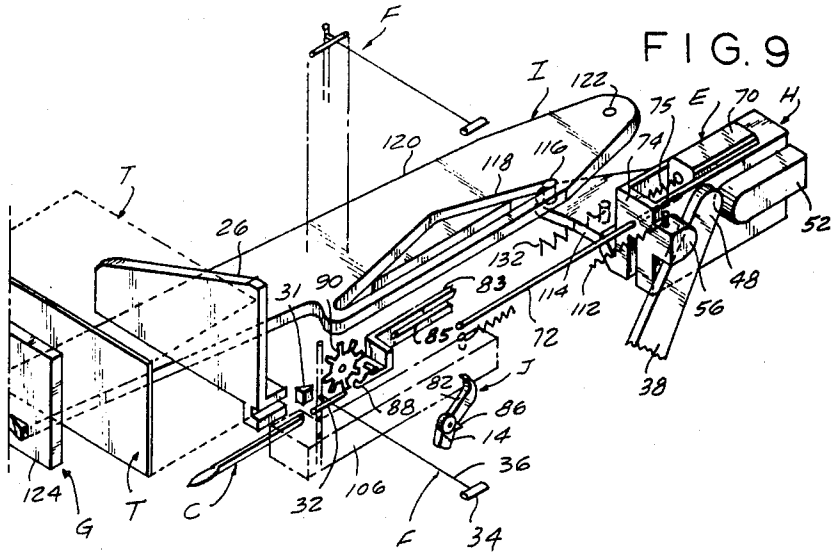
F
I
122
75
E
70
H
120
118
116
74
T
26
52
132
48
31
90
83
114
112
56
85
72
J
82
38
88
86
14
36
124
G
T
C
32
106
F
34

FIG. 9

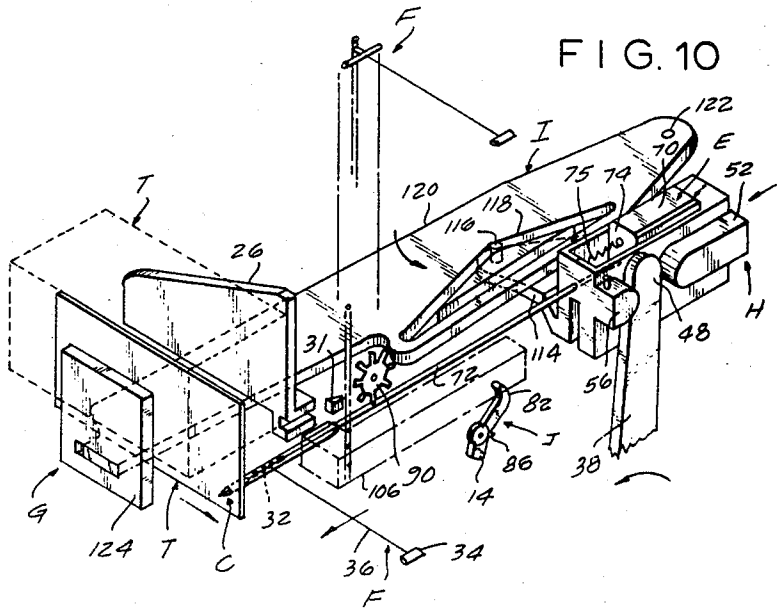
F
122
I
70
E
52
75
74
120
118
116
T
26
H
48
31
114
72
56
82
J
86
38
90
14
106
G
32
124
T
C
36
34
F

FIG. 10

FIG. 11

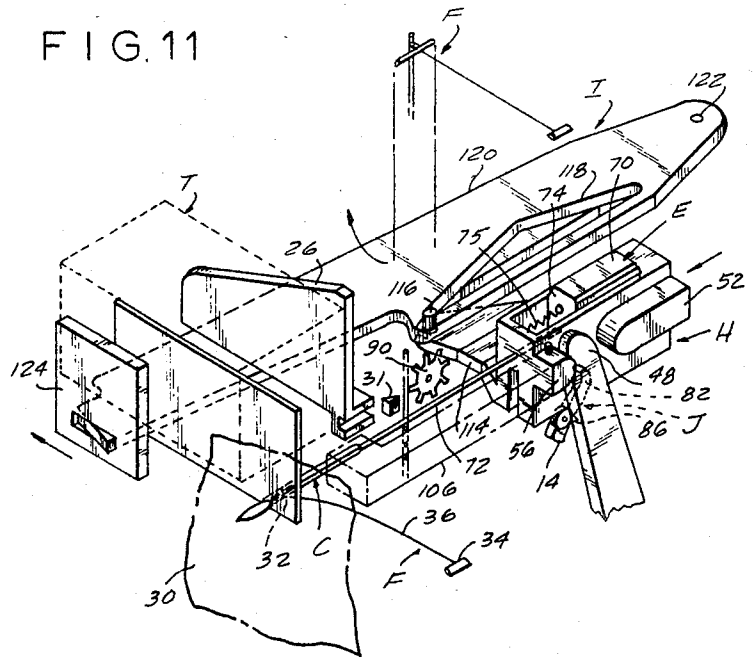
F
I
122
120
118
70
74
T
E
26
75
52
116
H
90
124
31
48
82
114
86
J
56
72
14
106
36
34
32
C
F
30

FIG. 12

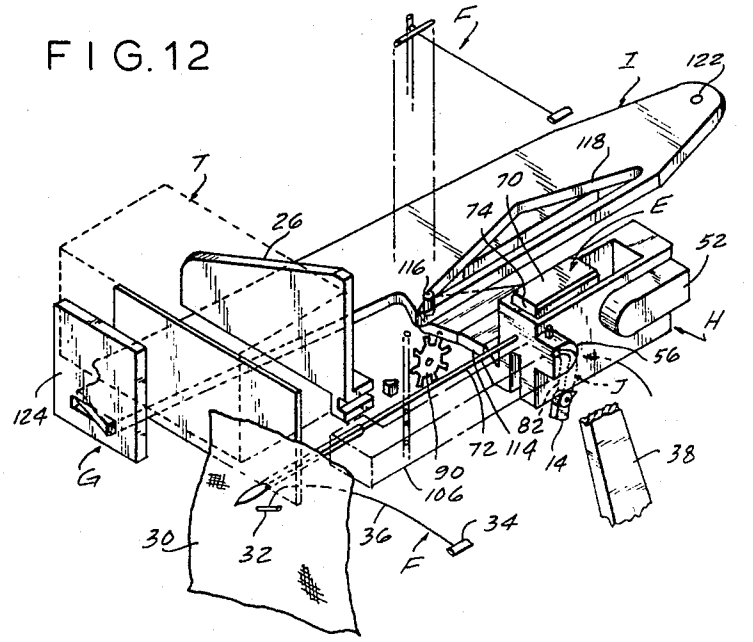
F
I
122
118
T
70
74
E
26
52
116
H
56
124
J
82
72
114
14
38
G
90
106
34
30
32
36
F

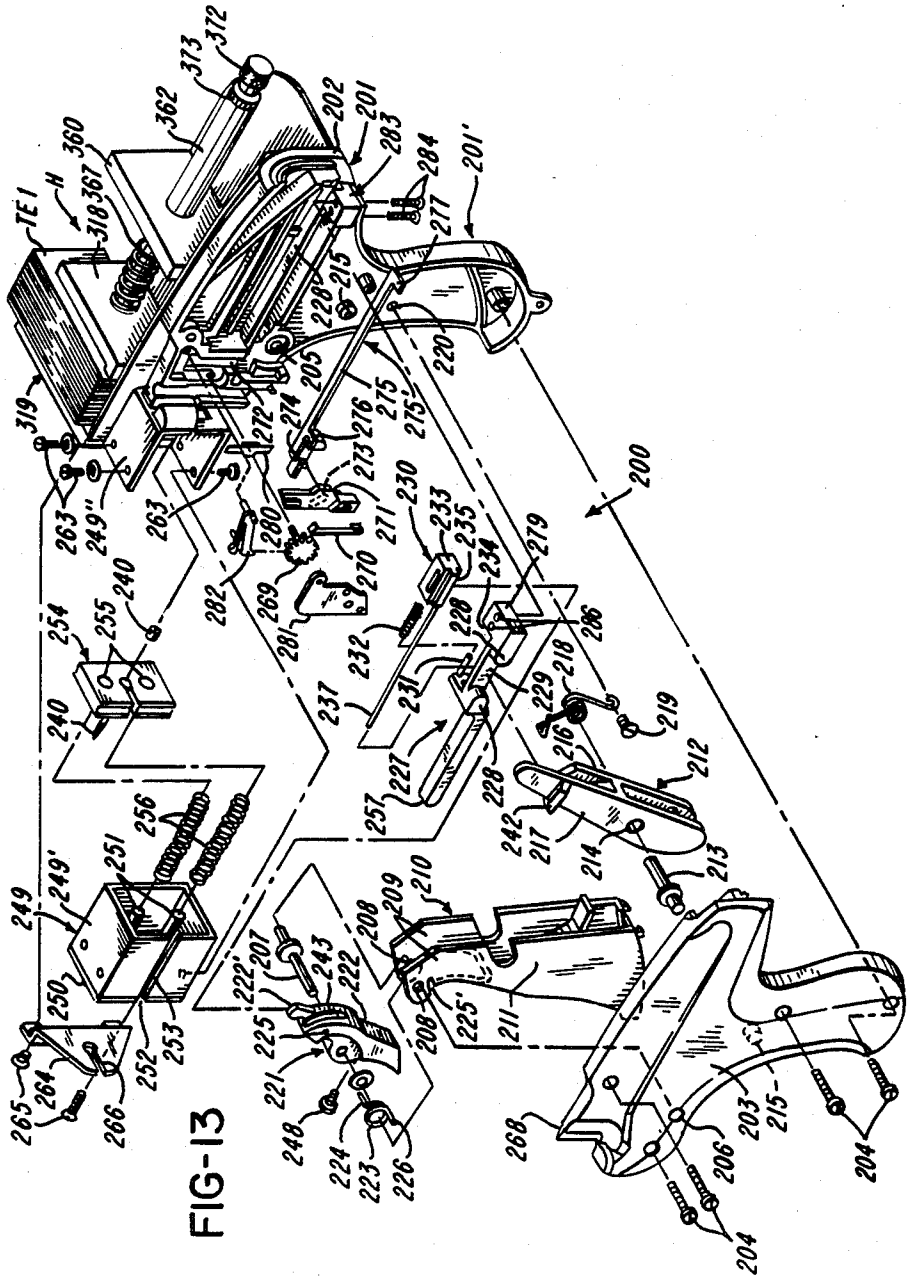

FIG-13

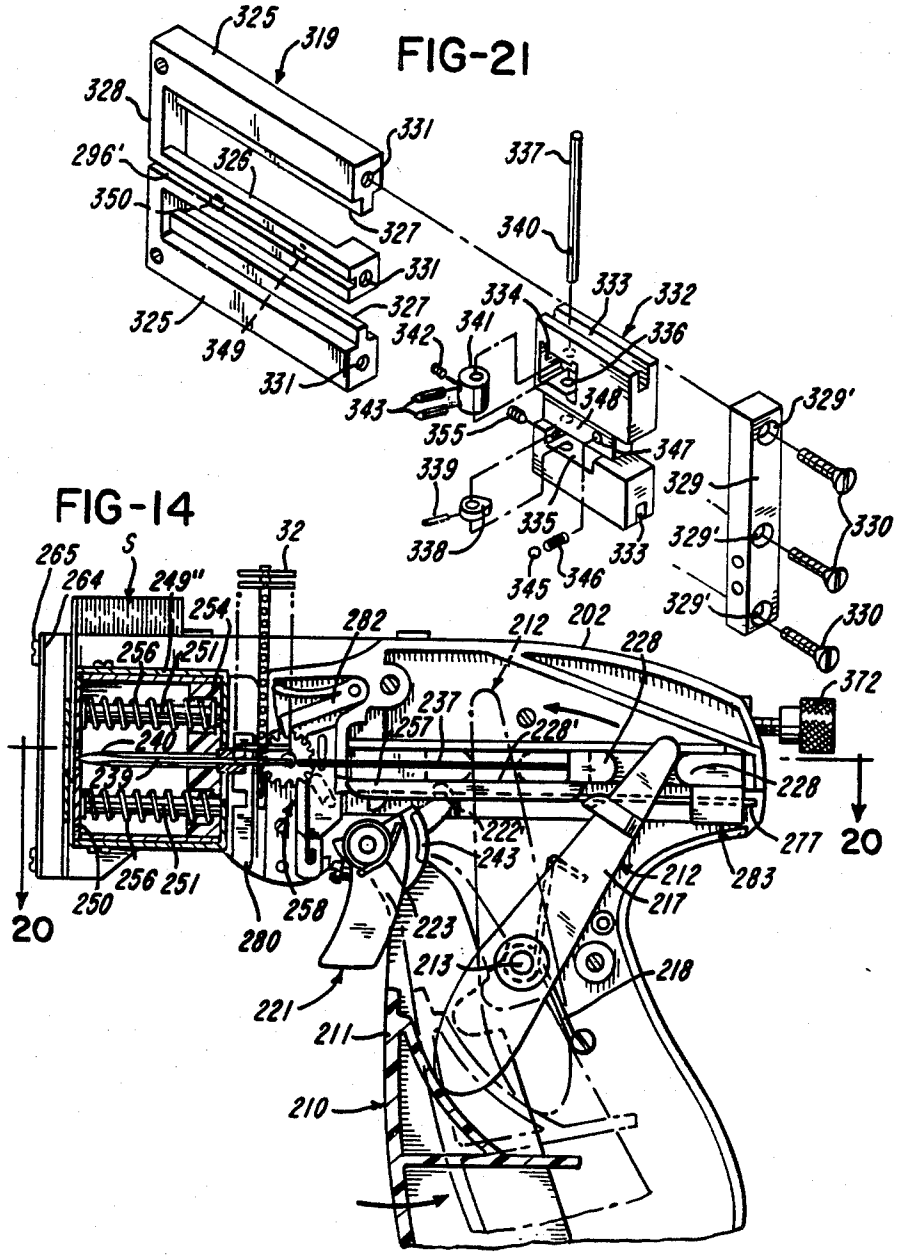
FIG-21
FIG-14
325
319
328
331
296'
326
350
327
337
340
333
332
334
336
341
342
349
343
348
355
347
339
329
329'
330
338
335
345
346
265
264
249"
S
32
254
282
212
202
228
256
251
237
257
228'
372
240
239
222
243
277
20
283
217
218
223
213
221
211
210
280
258
250

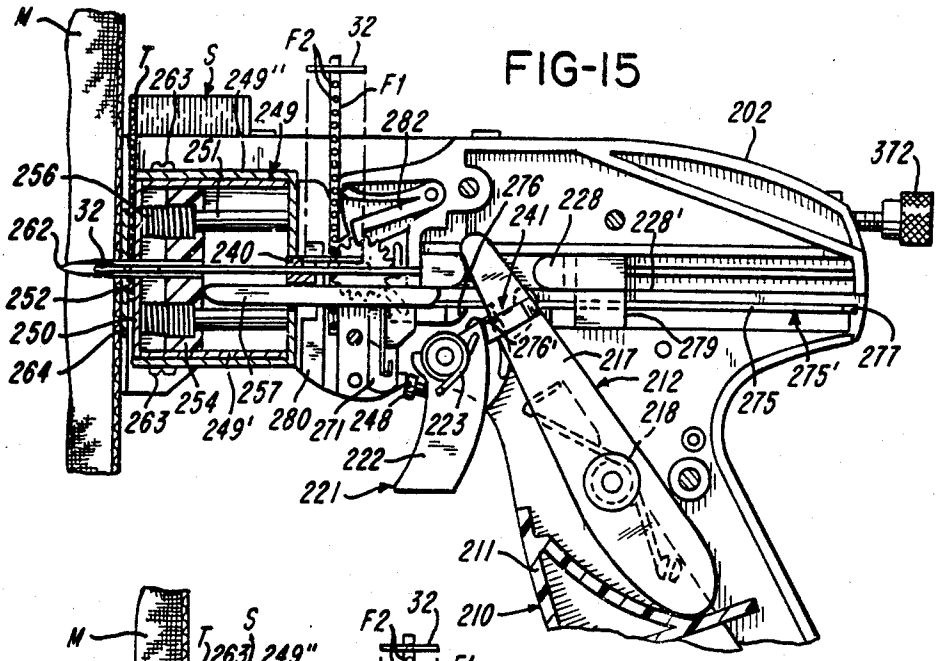

FIG-15

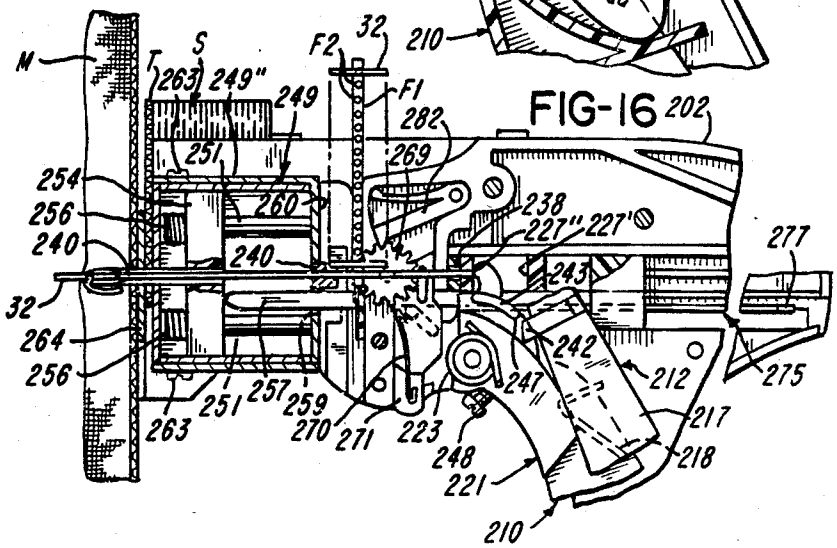

FIG-16

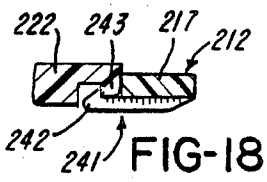

FIG-18

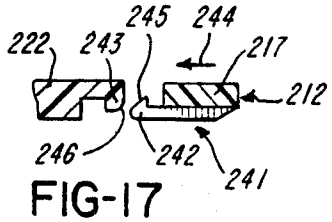

FIG-17

FIG-19

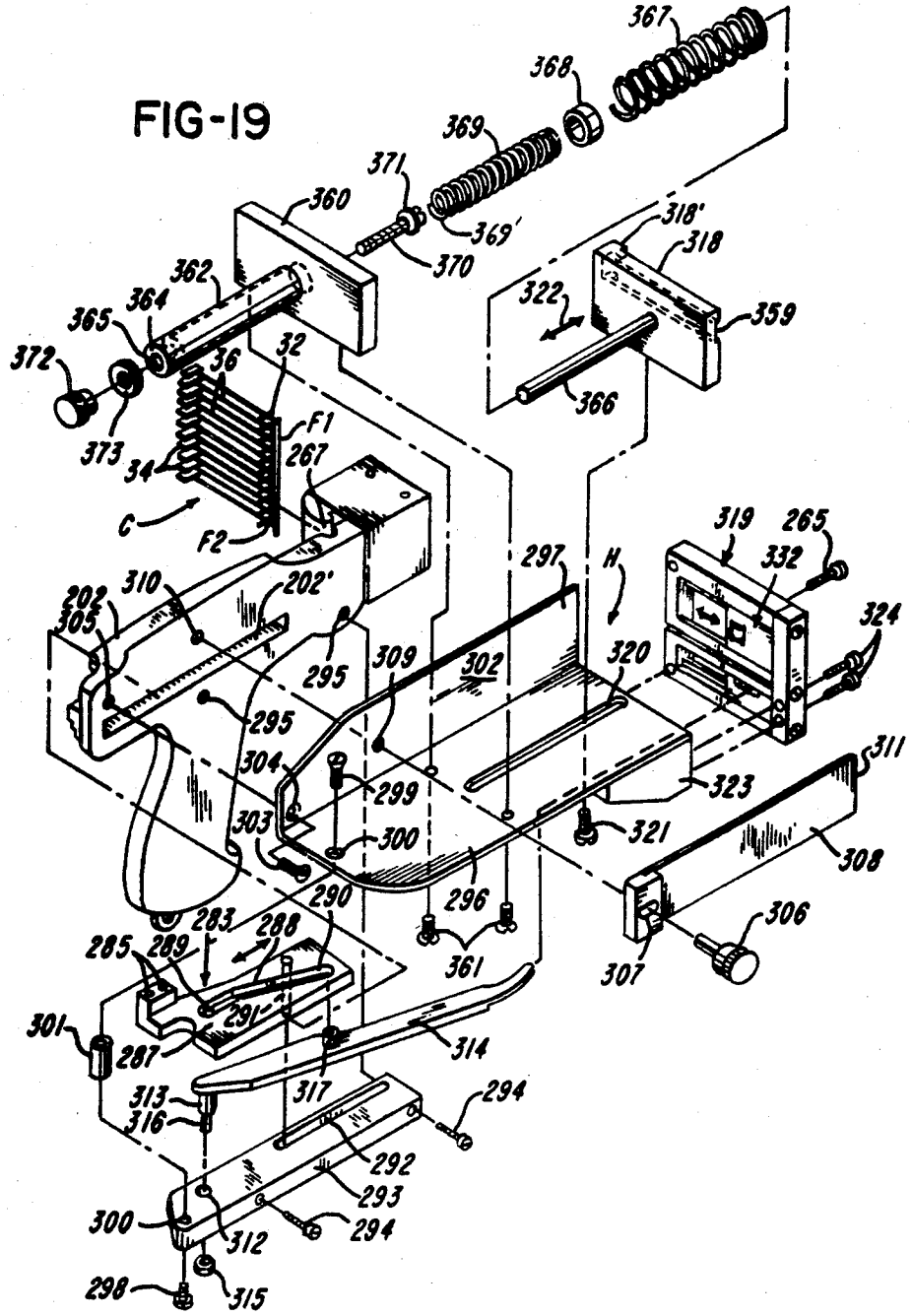
367
368
369
371
369'
370
360
318'
318
322
359
366
362
364
365
372
373
36
32
F1
267
34
C
F2
319
265
332
324
297
H
202
310
202'
305
295
309
302
320
295
304
299
323
311
303
300
321
308
290
296
283
288
285
289
361
306
307
301
287
291
314
313
316
317
294
292
293
300
312
294
298
315

FIG-20

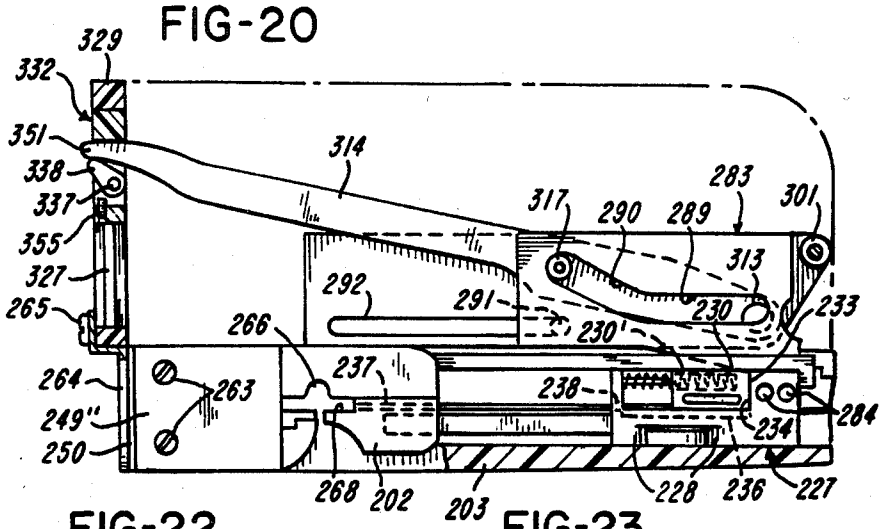

FIG-22

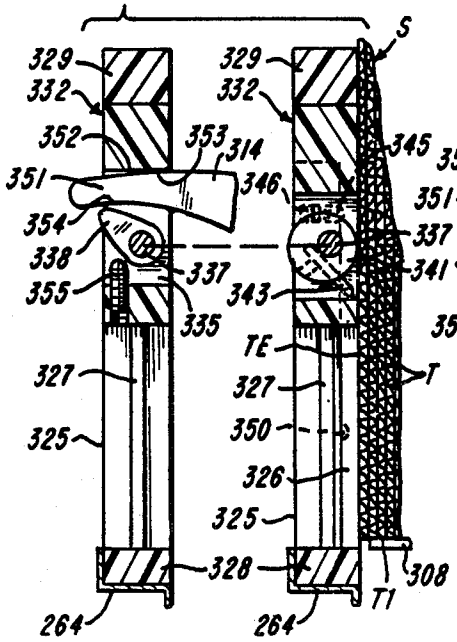

FIG-23

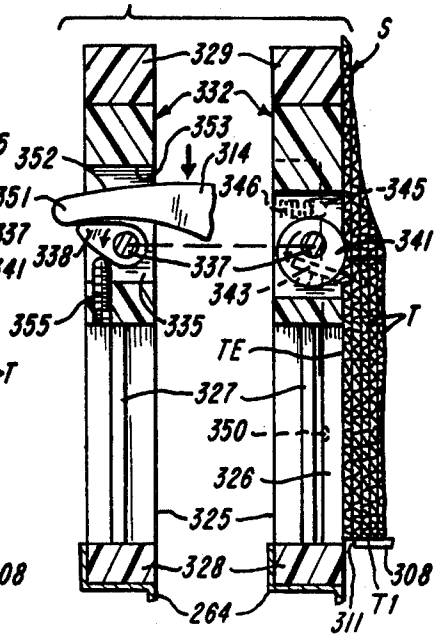

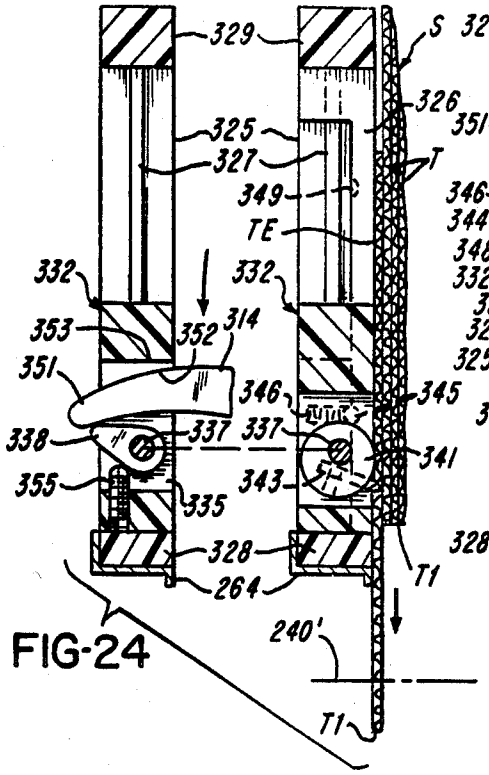

FIG-24

FIG-25

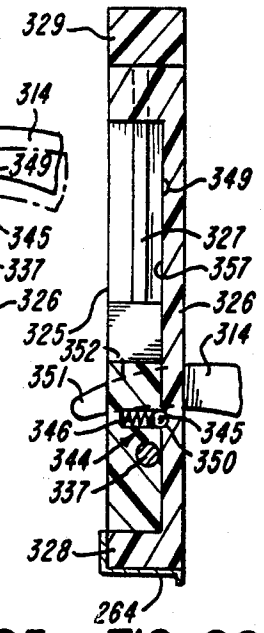

FIG-26

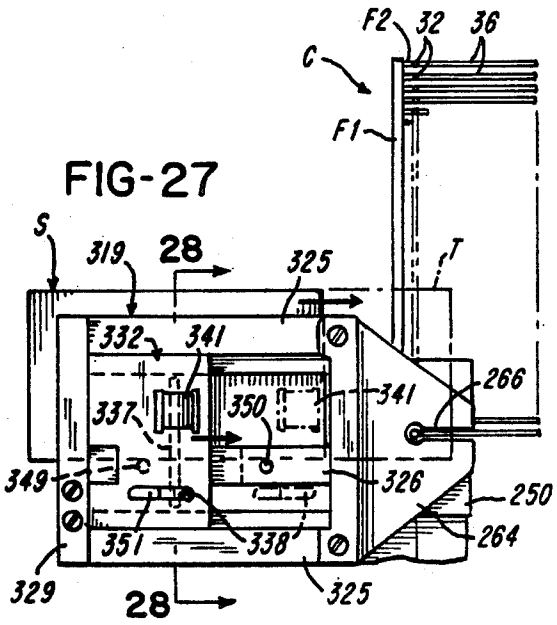

FIG-27

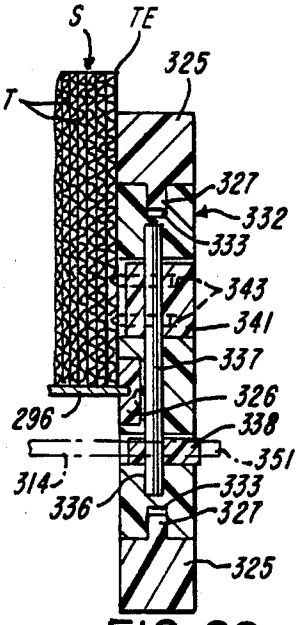

FIG-28

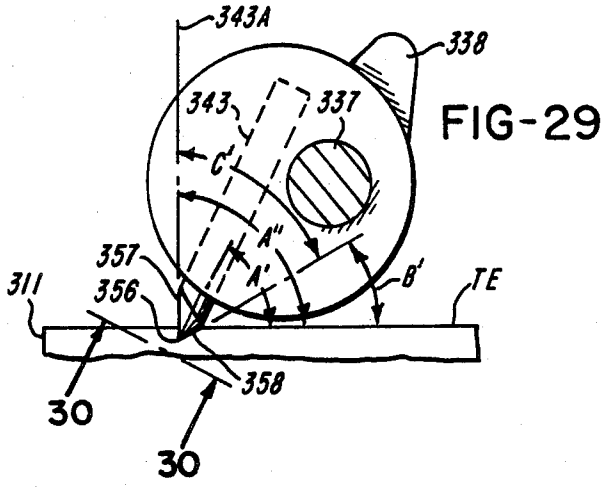

FIG-29

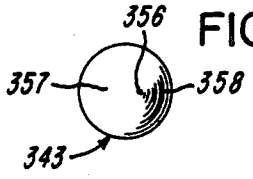

FIG-30

TAG DISPENSING AND ATTACHING METHOD AND APPARATUS

Cross-Reference to Related Application

This application is a division of Ser. No. 654,062, filed Sept. 25, 1984, now U.S. Pat. No. 4,610,384, which is a continuation-in-part of patent application Ser. No. 553,080, filed Nov. 18, 1983, now U.S. Pat. No. 4,610,385.

BACKGROUND OF THE INVENTION

1. Field of the Invention

The present invention relates to tag attaching method and apparatus and, more particularly, to method and apparatus which automatically dispenses a tag and mounts the tag to an article by means of a plastic fastener.

2 Brief Description of the Prior Art

The following patents are made of record: U.S. Pat. Nos. 2,331,252; 3,012,484; 3,022,508; 3,385,498; 3,595,460; 3,598,025; 3,734,375; 3,880,339; 3,896,713; 3,898,725; 3,948,128; 4,040,555; 4,049,179; 3,237,779; 4,315,587; 4,323,183; European patent application No. 83850056.9, Publication No. 0 0901 410 published Oct. 12, 1983; Japanese patent application No. 54-20935, patent laid-open No. 55-116544, laid open Sept. 8, 1980; Japanese patent application No. 50-120766, publication No. 57-16824 published Apr. 8, 1982; and Japanese patent publication No. 53-38998, published Oct. 18, 1978 based on application No. 49-53507 filed May 14, 1974, now patent No. 958,794 registered June 14, 1979.

Plastic fasteners, such as the type sold by Monarch Marking Systems, Inc. of Dayton, Oh. under the registered trademark TAGGER TAIL and also by other manufacturers, are widely used in the retail industry for attaching labels, tags, and other identifying or information containing objects to a wide variety of soft goods articles for inventory control and pricing purposes. Literally millions of these fasteners are applied to articles during the course of a year, most of which are applied by operators using manually-actuated, hand-held plastic fastener attachers or guns which are sold by a variety of companies for this purpose. Marking systems of this type have been highly commercially successful because of the low price of the fasteners, the ease and relatively low skill required for the attaching operation, and because of the security which is provided due to the structure of the fastener and the material from which it is made, which substantially reduce problems associated with tag switching.

The tag mounting procedure is quite simple. A magazine or clip of plastic fasteners is loaded into the attacher, which is held in one hand of the operator. The operator holds the tag against the article to be tagged in the other hand. The attacher is moved towards the article until the needle fixed to and extending from the front of the attacher penetrates the tag and the article. The operator then actuates the attacher by depressing a trigger-like member such that a single plastic fastener is severed from the clip and dispensed through the needle. This causes the T-bar end of the fastener to be situated behind the article, with the filament penetrating the tag and the article. The attacher is then moved away from the article, withdrawing the needle therefrom, and leaving the fastener in place with the filament of the fastener through a hole in the article and the tag, the T-bar end of the fastener lodged behind the article, and the paddle end of the fastener situated in front of the tag. As the operator releases the trigger, the next plastic fastener is moved into position such that the operation can be rapidly repeated.

Notwithstanding the fact that the plastic fasteners are quite inexpensive and, thus, the per unit tagging costs are low, the aggregate costs involved in the tagging operation are high. This is because virtually every article of soft goods which is sold must be tagged in this manner, requiring a great deal of time and labor. . Users and manufacturers of this type of system are continually seeking methods of reducing the overall cost of the marking operation. An analysis of the tagging operation indicates that a significant portion of the time and motion required is a result of the necessity for the operator to remove a single tag from a stack of tags and place it on the needle by inserting the needle through a prepunched hole in the tag prior to the use of the attacher. Thus, a reduction in time and labor would result if the tag positioning operation could be facilitated.

In my United States Patent No. 4,323,183, issued Apr. 6, 1982 and entitled "Tag Dispenser For Hand-Held Attacher," I describe an apparatus designed to facilitate the tag positioning operation and, thereby, reduce the overall cost of the tag mounting procedure. The device described in my patent includes a support to which a conventional plastic fastener attacher is movably mounted and upon which is situated a stack of tags. A slide is utilized to move a tag along the plane between the stack and a position in alignment with the needle of the attacher.

The attacher is mounted to the support by a plate which is movable relative to the support between a position wherein the needle is remote from the plane of slide movement and a position where the needle intersects the plane. As the needle intersects the plane of the slide, it pierces the tag which is held in position by an anvil with a needle receiving opening. The attacher is then actuated in the conventional manner. Slide movement may be accomplished manually or automatically in conjunction with the movement of the attacher by using a mechanical linkage, an electrically driven motor, a solenoid, or a pneumatic cylinder.

The device described in the aforementioned patent functions acceptably, but requires that the article and the support be held stationary as the attacher is moved forward relative to the support, to enable the needle to pierce the tag and the article. The attacher must be held in the forward position, against the action of a spring, as it is actuated by depressing a trigger to dispense the plastic fastener. Thus, two separate motions were required—one to move the fastener forward against the action of the spring, and a second to squeeze the trigger while the attacher was held in the forward position. It has been found that after repeated operations of this device, the operator often became fatigued and, thus, some of the time saving advantage of this device was lost. In addition, an operator using this device often pricked her/his finger as the needle burst through the tag and into the article, as the attacher was pushed forward.

It is, therefore, a prime object of the present invention to provide a tag dispensing and attaching apparatus which will facilitate the tagging operation without fatiguing the operator.

It is another object of the present invention to provide a tag dispensing and attaching apparatus which is operated entirely by the squeezing of triggers.

It is another object of the present invention to provide a tag dispensing and attaching apparatus wherein the fastener attaching portion need not be moved relative to the tag dispensing portion.

It is another object of the present invention to provide a tag dispensing and attaching apparatus which is light in weight, easily manipulatable, and can be operated by a single hand of the operator.

It is another object of the present invention to provide a tag dispensing and attaching apparatus which is mechanically simple and operates reliably.

It is another object of the present invention to provide a tag dispensing and attaching apparatus which can be constructed of relatively inexpensive parts which cooperate together for a long, useful life with a minimum of maintenance.

It is another object of the present invention to provide a tag dispensing and attaching apparatus which greatly reduces the possibility of injury to the operator from an advancing needle.

It is another object of the present invention to provide a tag dispensing and attaching apparatus which utilizes conventional plastic fasteners.

It is another object of the present invention to provide a tag dispensing and attaching apparatus which can be used with large numbers of tags of a variety of different dimensions.

It is another object of the present invention to provide a tag dispensing and attaching apparatus which is primarily designed for hand-held use, but which can easily be adapted to be powered by external means.

It is another object of the present invention to provide a hand-held tag attacher which is completely manually powered using only one hand, wherein manual actuating means are provided to move a tag feeder to advance a tag to an attaching position, to move the bar section of a fastener through the tag and merchandise, and to advance the next fastener to the dispensing position.

It is another object of the present invention to provide a tag feed mechanism adapted for use in a manually operated hand-held tag attacher which includes tag engaging means actuated by the driving force which positions a tag in alignment with the attacher needle.

It is another object of the present invention to provide a tag feed mechanism adapted for use in a manually operated hand-held tag attacher which includes tag engaging means which are deactuated as the tag positioning slide moves to its retracted position.

It is another object of the present invention to provide apparatus for feeding an attaching tag which includes a hand-held attacher with a manually operated actuator and a movably mounted needle wherein initial actuation of the actuator causes feeding of a tag into alignment with the needle and further actuation of the actuator causes the needle to move to an extended position to penetrate the tag.

It is another object of the present invention to provide a hand-held tag attacher which is completely manually powered by the operation through repetitive cycles using only one hand, wherein manual actuating means are used to move a tag feeder to advance a tag from a hopper to an attaching position, to move a push rod to push a bar section of a fastener through a tag and merchandise, and to advance fasteners using a fastener advancing mechanism to a dispensing position using mechanically connected elements controlled by the actuating means.

It is another object of the invention to provide a simple and reliable arrangement for separating and feeding one tag at a time from a stack in a hopper to an attaching position in a hand-held tag attacher.

It is another object of the invention to provide simple and reliable method and apparatus for separating and feeding one-tag-at-a-time from a stack in a hopper to an attaching position in a hand-held tag attacher in which the endmost tag in the hopper is engaged by one or more feed pins, and thereafter the feed pin or pins are moved toward a forward position while the pin or pins remain engaged with the endmost tag.

It is another object of the invention to provide a hand-held tag attacher powered solely by the operator in which manually operable actuating means moves a slide which moves a tag feeder, a mechanism for advancing fasteners and a push rod for ejecting fasteners.

It is an object of the invention to provide a hand-held tag attacher with a hopper for holding a stack of tags, which meets some or all of the above-described objects, wherein the operator can sense the development of a jam condition so that the operator can cease applying force to the actuating means.

In accordance with the present invention, tag attaching apparatus is provided comprising a housing, actuating means, and a hollow needle through which a fastener is dispensed. Means are provided for mounting the needle to the housing for movement between an original position and an extended position. Means are provided for moving a fastener through the needle. Means are provided for moving the needle mounting means from an original position to the extended position, in response to actuation of the actuating means. Means are also provided for causing the fastener moving means to move the fastener through the needle, in response to further actuation of the actuating means.

The means for engaging the needle mounting means includes first slide means mounted within the housing for movement between a first position, remote from the needle mounting means, and a second position, wherein the needle mounting means is operably engaged. The fastener moving means includes second slide means movable with and relative L to said first slide means.

The second slide means is mounted for movement relative to the first slide means between a first relative position and a second relative position. The second slide means carries a plunger having a tip. The plunger is movable between an initial position, wherein the tip is remote from the needle, a second position, wherein the tip is within the needle, and a third position wherein the tip pushes the fastener out of the needle. The tip is within the needle when the first slide is in its second position and the second slide is in its first relative position and pushes the fastener out of the needle when the second slide is in the second relative position.

Means are provided for urging the first slide means towards the first position. Means are also provided for latching the first slide means in its second position.

The actuating means includes first and second actuators, preferably in the form of individually actuatable triggers. The first actuator is effective, when actuated, to move the first slide means from its first position to its second position. The second actuator is effective, when actuated, to release the latching means. Thus, when the

second actuator is actuated, the first slide means is returned to its first position by the urging means.

The second actuator is also effective, when actuated, to second relative position with respect to the first slide. Thus, actuation of the second actuator causes the plunger to complete its movement through the needle, thereby causing the fastener to be dispensed.

The apparatus also includes tag dispensing means. The tag dispensing means is operably connected to the actuating means. The tag dispensing means is effective, upon actuation of the actuating means, to move a tag into alignment with the needle.

The tag dispensing means is actuated, by the actuating means, prior to the needle mounting means reaching its extended position. The tag is positioned in alignment with the needle prior to the needle mounting means reaching its extended position. Thus, the tip of the needle can pierce the tag and, thereafter, retain the tag in the aligned position.

The apparatus also includes a tag retaining means. The tag dispensing means includes tag slide means movable between a first position, aligned with the tag retaining means, wherein in a tag is engaged, and a second position wherein the engaged tag is aligned with the needle. Means are provided for operably connecting the actuating means and the tag slide means.

This connecting means includes an arm movable between first and second positions in response to the actuation of the actuating means. A pin is carried by the arm. A lever is mounted on the housing for pivotal movement between first and second positions. The lever carries a cam track into which the pin extends. As the arm is advanced, the lever pivots, causing the tag slide means attached thereto to move a tag into alignment with the needle.

The cam track comprises a continuous loop between first and second points. The path includes first section extending in a substantially straight line between the points and a second section extending between the points and including first and second parts. The first and second parts intersect at an angle. Preferably, the angle is less than 180°.

As the arm is advanced, the pin moves along the second track section. As it moves along the first part, a tag is moved into alignment with the needle. As it moves along the second part, the slide retracts. The pin returns to its original position, without moving the slide, along the first track section.

In accordance with another aspect of the present invention, a tag feed mechanism adapted for use in a hand-held tag attacher is provided. The fastener attacher is of the type having a manually operated actuator. The mechanism includes means for moving a tag into alignment in the attacher. Means are provided for operably connecting the actuator and the tag moving means for applying a driving force to the tag moving means to move same in response to the actuation of the actuator. The moving means includes means, effective when actuated, for engaging a tag. The engaging means is actuated by the application of the driving force by the connecting means to the moving means.

Spring means are provided which are operably active on the connecting means for urging the tag moving means to a position remote from the attacher. The engaging means is automatically released as the tag moving means moves toward the remote position.

The tag moving means moves between the position remote from the attacher and a position wherein an engaged tag is in alignment with the attacher. Means are provided for retaining the tag in alignment with the attacher as the tag moving means moves from the aligned position towards the remote position.

The tag moving means further comprises means for limiting the degree of actuation of the tag engaging means. The tag moving means also comprises means for adjusting the limiting means to alter the degree to which the engaging means is actuated.

Means are provided for applying a force to the tag moving means to resist movement of the tag moving means from the remote position. The application of the driving force causes the tag engaging means to be actuated and, thereafter, causes the movement resisting force to be overcome.

The tag engaging means includes an actuating portion and a tag gripping portion. The actuating portion is operably engaged by the connecting means. The actuating portion is a tag gripping portion. The actuating portion is operably engaged by the connecting means. The actuating portion is movably mounted relative to the tag moving means between a position wherein the gripping portion is inactive with respect to the tag and a position wherein the gripping portion is active on the tag. The application of the driving force by the connecting means causes the actuating portion to move from the inactive position towards the active position.

The actuating portion, in the active position, functions to transfer the driving force from the connecting means to the tag moving means to move same. Preferably, the force receiving portion of the tag moving means comprises the limiting means. The limiting means preferably comprises a position adjustable member rotatably mounted on the tag moving means at a point proximate the gripping portion of the tag engaging means.

Relative movement between the tag moving means and the tag, in a direction away from the actuator, causes the gripping portion to release the tag. This relative movement also causes the actuation portion to move from the active position towards its inactive position.

The application of the driving force causes the tag engaging means to be actuated through the movement of the actuating portion towards the active position and, thereafter, causes the movement resisting force to be overcome. The driving force is transferred from the connecting means to the force receiving portion of the tag moving means through the actuating portion so as to overcome the movement resisting force.

The actuating portion comprises lobe means and the gripping portion comprises disc-like means and tag engaging pin means mounted on the disc-like means. A shaft is provided to which the lobe means and the disc-like means are fixedly mounted. Means are provided for rotatably mounting the shaft on the moving means.

Preferably, the axis of the disc-like means is radially offset from the axis of the shaft. This permits the rotational force applied to the disc-like means to be mechanically enhanced as it is applied to the tag engaging pin mounted thereon.

In accordance with another aspect of the present invention, apparatus is provided for feeding tags and attaching same by means of a fastener. The apparatus includes a hand-held fastener attacher with a manually actuatable actuator. A needle for dispensing fasteners is movably mounted to the attacher. Means are provided which are adapted, when actuated, to move the needle

between retracted and extended positions. Means, adapted when actuated, are provided for feeding a tag into alignment with the needle. Means are provided for operable mechanically connecting the tag feed means, the needle moving means, and the actuator. The connecting means comprises means responsive to the initial actuation of the actuator to actuate the tag feed means to move a tag into alignment with the needle. The connecting means are responsive to further actuation of the actuator to actuate the needle moving means to move the needle from the retracted to the extended position.

The connecting means includes cam means operably connected to the actuator and cam follower means operably connected to the tag feed means. The cam means includes first and second sections. Relative movement between the cam means and the cam follower means along the first cam section results in actuation of the feed means. Relative movement second cam section occurs during actuation of the needle moving means.

Relative movement of the cam means and the cam follower means along the first cam section occurs during initial actuation of the actuator. Relative movement of the cam means and the cam follower means along the second cam section occurs during further actuation of the actuator.

The needle moving means moves the needle in a given direction. The second cam section is substantially parallel to the given direction. The first cam section extends in a different direction from the given direction.

The tag feed means moves, when actuated, in a direction substantially perpendicular to the given direction. The direction of the first cam section is between the given direction and the direction perpendicular thereto.

To these and to such other objects which may hereinafter appear, the present invention relates to tag dispensing and attaching apparatus, as described in detail in the following specification, and recited in the annexed claims, taken together with the accompanying drawings, wherein like numerals refer to like parts, and in which:

FIG. **1** is an isometric view of the tag dispensing and attaching apparatus of the present invention;

FIG. **2** is a side cross-sectional view of the tag dispensing and attaching apparatus of the present invention, illustrating the various positions of the first and second slides;

FIG. **3** is a top cross-sectional view of the tag dispensing and attaching apparatus of the present invention, illustrating operation of the tag dispensing portion;

FIG. **4** is a front cross-sectional view of the tag dispensing and attaching apparatus of the present invention, taken along line **4—4** of FIG. **3**;

FIG. **5** is a partial front cut-away view of the tag dispensing portion of the tag dispensing and attaching apparatus of the present invention;

FIG. **6** is a side view of the tag dispensing portion of the tag dispensing and attaching apparatus of the present invention;

FIG. **7** is an enlarged fragmentary side view of a portion of the tag dispensing and attaching apparatus of the present invention;

FIG. **8** is an enlarged fragmentary top view of the portion of the tag dispensing and attaching apparatus of the present inven illustrated in FIG. **7**;

FIGS. **9** through **12** are schematic views of the tag dispensing and attaching apparatus of the present invention, showing variou stages of the tagging sequence;

FIG. **13** is a partly exploded view of another embodiment of the tag dispensing and attaching apparatus or tag attacher of the present invention;

FIG. **14** is a partly broken away side elevational view of the tag attacher shown in FIG. **13**, with solid lines depicting an initial or home position and phantom lines depicting another position between the initial position and an actuated position;

FIG. **15** is a view similar to FIG. **14**, but showing a first actuator in an actuated position and a lever latched to a second actuator, with a push rod in a partially actuated position;

FIG. **16** is a view similar to FIGS. **14** and **15**, but showing the push rod in its actuated position and showing the latch as having been tripped;

FIG. **17** is a fragmentary partly sectional view showing the lever moving into latching engagement toward the second actuator;

FIG. **18** is a view similar to FIG. **17**, but showing the lever latched to the second actuator;

FIG. **19** is a partly exploded view showing in particular the the tag feeder and a portion of the drive mechanism for the tag feeder;

FIG. **20** is a generally horizontal sectional view taken along line **20—20** of FIG. **14**;

FIG. **21** is an exploded view of the tag feeder and mounting for the tag feeder;

FIG. **22** is a view showing two sections with the tag feeder in its initial or retracted position and with the feed pin in its ineffective position;

FIG. **23** is a view similar to FIG. **22** with the tag feeder in its initial retracted position, but with the feed pin in its effective feeding position;

FIG. **24** is a view similar to FIGS. **22** and **23**, with the tag feeder in its advanced or actuated position and the endmost tag in the stack in its advanced or attaching position;

FIG. **25** is a sectional view similar to one of the sections in FIG. **22** but along a plane showing structure for resisting initial advance of the tag feeder;

FIG. **26** is a view similar to FIG. **25**, but showing the tag feeder in its advanced position;

FIG. **27** is a front elevational view of the tag attacher;

FIG. **28** is a sectional view generally long line **28—28** in FIG. **27**;

FIG. **29** is an enlarged view showing one of the feed pins in engagement with the tag; and

FIG. **30** is a view generally along **30—30** of FIG. **29**.

As shown in FIGS. **1** and **2**, the tag dispensing and attaching apparatus of the present invention comprises a molded plastic pistol-grip type housing, generally designated A. Depressable type actuating means, generally designated B, are situated on the lower portion of housing A. A hollow needle, generally designated C, is mounted on the forward portion of housing A. Needle C is of the conventional type, with an internal bore and a side slot which permits the T-bar end of a plastic fastener F to move through its length with the filament of the fastener extending through the slot. Means, generally designated D, are provided for movably mounting the needle C to housing A for movement between an original position and an extended position. Means, generally designated E, are provided for moving the T-bar end of the fastener F through needle C. Means, generally designated G, are provided for aligning a tag T with needle C.

Means, generally designated H, are provided for moving needle mounting means D. Means I are pro-

vided for connecting actuating means B to tag aligning means G. Means H and I are effective, when actuating means B is actuated, to cause tag aligning means G to align a tag T with needle C and to move needle C from its original position to an extended position to pierce the aligned tag T. Means, generally designated J, are provided for causing fastener moving means E to move a fastener through needle C.

Housing A consists of a grip portion **10** designed to be grasped by the hand of the operator with the fingers of the operator encircling actuating means B. Actuating means B consists of two separately depressable triggers **12** and **14**. Trigger **14** is situated to align with the index finger of the operator, whereas trigger **12** is situated to align with the remaining fingers of the operator. This permits triggers **12** and **14** to be separately actuated, in sequence, by the hand of the operator.

The upper portion of housing A includes a main section **16** having a slot **18** at the top thereof into which a clip or assembly of interconnected plastic fasteners F may be received. Forward of slot **18**, at the top of housing section **16**, is a pivotally connected hood section **20** which provides access to the needle engaging mechanism to permit removal of the needle. Hood section **20** also functions to prevent dirt from entering the mechanism and protects the operator from being injured by the forward advancement of needle C.

Extending outwardly from the right side of housing A, as seen in FIG. **1**, is the tag dispensing portion of the present invention. The mechanism for the tag dispensing portion of the present invention is situated within section **22** of housing A. A stack of tags T is situated on the upper surface of housing section **22**, adjacent hood **20**. The stack of tags T is retained between an anvil **24**, fixedly mounted to the front of housing A, and a spring-loaded pressure plate **26** which is mounted to housing A for movement along the top surface of section **22**, so as to urge the tag stack against the interior surface of anvil **24**.

The outer edge of the tag stack is held in position by an adjustable arm **25** (see FIG. **4**). One end of arm **25** is positioned adjustably mounted within a slot **27** on a downwardly extending part **28** affixed to the front of housing section **22**.

An article **30** to be tagged is held against the front surface of anvil **24**. Trigger **12** is depressed, causing a tag T to be moved into a position behind anvil **24** and in alignment with the path of movement of needle C. The depression of trigger **12** also causes a fastener to be severed from the fastener clip as it moves against knife edge **31**, situated within housing A immediately behind needle C, and the T-bar end **32** thereof to be pushed into the needle. This occurs as the needle is advanced in the forward direction to pierce tag T, which is held in position behind anvil **24**. It should be noted that anvil **24** has a needle receiving opening **29** such that it does not interfere with the forward movement of needle C. The needle is latched in this position so that it can be used as a probe to locate the exact position on the article where the fastener is to be placed.

Trigger **14** is then actuated, causing the T-bar end **32** of the fastener F to be dispensed through needle C such that it is situated on the opposite side of article **30**. Housing A and article **30** are then moved apart such that the tag T carried by the fastener F is removed from housing A.

As illustrated in FIG. **1**, after the tagging operation is complete, the T-bar end **32** of the fastener F is situated on one side of the article **30** and the paddle end **34** of the fastener is situated on the opposite side of tag T. The filament **36** of the fastener passes through openings in the article **30** and the tag T such that tag T is now connected to article **30** and cannot be removed therefrom without cutting the filament **36**.

As illustrated in FIG. **2**, trigger **12** has an internal part **12*a*** which is situated adjacent a roller **37** mounted on the bottom end of a lever **38**. Lever **38** is pivotally mounted within handle portion **10** of housing A at point **40**. When trigger **12** is depressed, lever **38** will pivot about point **40** in an arc against the action of a torsion spring **42**. Spring **42** has outwardly extending arms situated between the interior surface of an upwardly extending part **44** of grip **10** and the interior surface of the rear wall **46** of lever **38**. Spring **42** urges the upper portion of lever **38** toward the rear of housing A, as shown in solid in FIG. **2**.

The upper end **48** of lever **38** has a rounded configuration and is situated within a recess **50** in a slide **52**. Slide **52** comprises the means for moving needle mounting means D. Recess **50** is defined between a pair of outwardly extending rounded parts **54**, **56** of slide **52**. This configuration is designed to permit upper end **48** of lever **38** to be moved relative to slide **52** in a smooth, non-binding manner.

As lever **38** is pivoted, slide **52** will move within housing A from a rear position (shown in solid in FIG. **2**) proximate the rear wall of housing A to a forward position (shown in phantom in FIG. **2**) near the front wall of the interior of the housing. The movement of slide **52** within housing A is guided by a track **58** which protrudes from the interior surface of the housing wall. As slide **52** approaches its forward position, it will engage needle mounting means D and move same forward to cause needle C to intersect the plane of anvil **24**.

At the bottom of slide **52** is a cavity **60** into which a latch spring **62** is received. Latch spring **62** has a downwardly projecting finger **64** having an inclined forward portion **64*a*** and a rear portion **64*b*** which is substantially perpendicular to the path of movement of slide **52**.

Extending into the interior of housing A from track **58** at the forward portion thereof, is a member **66** which cooperates with latch spring **62** to retain slide **52** in its forward position. Member **66** has an inclined or rounded rear surface which cooperates with portion **64*a*** of finger **64** to cam the finger out of alignment with member **66** as slide **52** is moved in the forward direction. When slide **52** reaches the end of its forward motion, the resiliency of finger **64** will cause the finger to lodge in front of the forward surface of member **66**. Finger **64** will remain in this position until it is pushed upwardly by the actuation of trigger **14**. Latch spring **62** cooperates with member **66** to retain slide **52** in its forward position until it is released.

As best seen in FIG. **4**, slide **52** has a recess **68** within which is movably mounted a second slide **70**. Recess **68** is substantially larger (in length) than slide **70** so as to permit limited relative movement between slide **70** and slide **52**. Slide **70** carries a forwardly extending plunger **72** on its forward wall **74**. Plunger **72** moves in a path in alignment with the bore in needle C and functions to push the T-bar end **32** of fastener F through needle C.

Slide **70** is spring loaded toward the rear of recess **68** in slide **52** by a compression spring **75** extending therebetween. As slide **52** moves towards its forward position, spring **75** causes slide **70** to remain at the rear of recess **68**. As slide **52** moves forward plunger **72** will

engage the rear end of the T-bar **32** of a fastener F and move same so as to sever fastener F from the remainder of the clip and then to an intermediate position within needle C.

When slide **52** is in its forward position, a protruding finger **80**, carried on pivotable arm **82**, which forms the means J for moving the fastener moving means E. Arm **82**, which is integral with trigger **14**, will be situated in a position spaced behind wall **74** of slide **70**, and out of alignment with the path of movement of slide **52**. Trigger **14** is pivotally mounted on housing A at point **84**. When trigger **14** is depressed (see FIG. 7), arm **82** will rotate about point **84** such that finger **80** engages the rear surface of wall **74** and causes slide **70** to move forward relative to slide **52**, compressing spring **75**. This will cause the tip of plunger **72** to move all the way through needle C and dispense the T-bar end **32** of fastener F from needle C.

Trigger **14** also has a rear lobe **86** on the interior portion thereof. Lobe **86** is aligned with finger **64** of latch spring **62** such that when trigger **14** is depressed, lobe **86** will engage finger **64** and move same upwardly such that portion **64*b*** clears part **66**. When latch spring **62** clears part **66**, slide **52**, and slide **70** carried thereby, will move rearwardly back to its original position due to the urging of torsion spring **42** against lever **38**. This will also cause needle mounting means D to return to its original position.

Slide **52** has a protrusion **83** extending from the side thereof. Protrusion **83** is situated within an elongated slot **85** on a member **87**, the forward portion of which forms a flexible pawl **88**.

As slide **52** moves rearwardly, protrusion **83** engages the rear wall of slot **85** causing member **87**, including a pawl **88**, to move rearwardly a small distance to index a fastener feed wheel **90** in the counterclock-wise direction. Protrusion **83** and slot **85** function as a "lost motion" connection such that slide **52** can move relative to member **87** without causing movement of member **87** except at the extreme ends of the path of movement of slide **52**. At the rear end of the path of movement of slide **52** member **87**, and thus pawl **88**, move rearwardly, indexing wheel **90** and is then depressed, away from wheel **90** through the interaction between a protrusion **97** on pawl **88** and a pin **99** on the housing wall (see FIG. 7). At the front end of the path of movement of slide **52**, member **87**, and thus pawl **88**, move forwardly, a short distance, camming it past the spoke adjacent to it, such that it is positioned for the next indexing of wheel **90**.

It should be noted that a spring loaded flexible pawl **91**, pivotally mounted near the top surface of housing A, normally serves to prevent wheel **90** from rotating in the clockwise direction. Pawl **91** prevents feed wheel **90** from rotating as member **87** is moved forward to permit pawl **88** to cam past the adjacent spoke, so as to be positioned for the next indexing of wheel **90**.

Pawl **91** also has a second function. A pushbutton **93**, which forms a part of pawl **91**, is accessible from the exterior of housing A through opening **95** and is provided to disengage pawl **91** from feed wheel **90** when depressed. This is possible because of the flexibility of the material from which pawl **91** is made. Once pawl **91** is disengaged, wheel **90** can rotate freely in the clockwise direction (as long as pawl **88** is in the depressed position), permitting the clip of fasteners F to be removed from the apparatus, if necessary.

Feed wheel **90** has a plurality of outwardly extending spaced spokes along its periphery. These spokes are received in the openings between fasteners F (which are spaced along the runner bar of the clip) and engage the individual fasteners F such that the fasteners are moved in step-wise sequence through the gun as wheel **90** is indexed. This causes the T-bar **32** of each fastener F, in sequence, to align with plunger **72** and the bore in needle C. The T-bar end **32** of the next fastener F is fed into the ejection position automatically, in sequence, as slide **52** returns to its original position.

As noted above, slide **52**, as it is moved forward, engages the rear end of needle mounting means D. Means D comprises a movably mounted part **94** into which the base **96** of needle C is held by a needle release mechanism **98**. The base **96** of needle C is manufactured with a side indentation along its mid-section. The shaft **100** of a needle engaging mechanism **98** is situated to be received in the indentation (see FIG. 7). Shaft **100** has a semicircular cross-sectional configuration such that when it is rotated by needle release knob **102** to a first position, the shaft **100** is situated within the indentation in the needle base **96** so as to hold the needle base securely within part **94**. When handle part **102** is rotated 180°, shaft **100** is no longer situated within the indentation in needle base **96** and needle C can be moved forwardly relative to part **94** and removed from housing A.

As is best seen in FIG. 3, part **94** has a rearwardly extending portion **106** (aligned with part **56** on slide **52**) which carries an upwardly extending protrusion **108**. A similar upwardly extending protrusion **110** is situated on part **56** of slide **52**. Extending between protrusions **108** and **110** is a tension spring **112** which operably connects part **94** with slide **52**. As slide **52** moves forward, spring **112** is relaxed, and part **56** on slide **52** engages the rear of portion **106**, pushing portion **106** and, thus, part **94** forward such that needle C moves forward. As slide **52** returns to its original position, proximate the rear of housing A, spring **112** extends, urges part **94** to move backwards, and needle C to retract.

As best seen in FIGS. 3 and 4, an arm **114** extends outwardly from the lower side portion of slide **52**. Arm **114** carries an upwardly extending pin **116** on the outer lobe thereof. Pin **116** is situated within a cam track **118** located on the lower surface of a lever **120**. The rear end of lever **120** is pivotally mounted to housing A at pivot **122** such that lever **120** can move through a limited arc within section **22** of housing A.

The forward end of lever **120** (left, as seen in FIG. 3) is received within a recess in a tag slide **124** which is movable within anvil **24** from an original position (upper position seen in FIG. 3) aligned with the stack of tags T, and a feed position (lower position, as seen in FIG. 3) wherein a tag engaged by slide **124** is in alignment with needle C. As slide **52** is moved forward, lever **120** will move from its original position to the feed position, and then back to its original position. The rearward movement of slide **52** will have no effect on the position of lever **120**.

Cam track **118** is a continuous loop having two different paths between the rearwardmost point and the forwardmost point. One section **118*a*** of the track **118** is a straight line between the rearwardmost point of the track and the forwardmost point of the track, parallel to the axis of the aparatus. When lever **120** is in its original position, this section permits slide **52** to return from its forward position to its rear position without effecting the position of lever **120**. The other section of track **118**

comprises two parts **118***b* and **118***c* which meet at an angle, preferably less than 180°.

As slide **52** moves forward, pin **116** first moves along part **118***b* of track **118** such that lever **120** pivots toward needle C. The configuration of the surface of the cam track includes a step **119** which guides pin **116** into part **118***b*, instead of section **118***a*, during the initial portion of its forward movement. As pin **116** reaches the intersection between parts **118***b* and **118***c*, lever **120** is situated at the point closest to needle C, having engaged a tag from the stack and moved it into alignment with needle C. Further forward movement of slide **52** causes pin **116** to ride along part **118***c* of track **118** such that lever **120** reverses direction and moves away from needle C. As pin **116** reaches the forwardmost point in the track, lever **120** has returned to its original position. The return of slide **52** from its forward to its rearward position causes pin **116** to move along portion **118***a* of the track, without moving lever **120**.

As best seen in FIG. **6**, tag slide **124** has a plurality of tag engaging teeth **126** on its internal surface. Teeth **126** serve to engage the surface of the first tag T on the stack, which is urged forward by pressure plate **26**. Teeth **126** are shaped to engage the tag in one direction and to permit relative movement therebetween in the other direction. As slide **124** moves toward needle C, the tag engaged thereby will move with it, aligning with the path of movement of needle C. As pin **116** reaches the intersection of track parts **118***b* and **118***c*, needle mounting means D and, thus, needle C have moved forward to its extended position, such that the tip of needle C pierces the engaged tag. Anvil **24** holds the engaged tag firmly as needle C penetrates same. Anvil **24** has a needle receiving opening **29** therein so as not to interfere with the forward movement of the needle.

As slide **52** continues to move forward, tag slide **124** moves away from needle C, towards its original position. As this occurs, teeth **126** release the surface of the tag, which is now held in position by the needle, such that the tag slide **124** retracts without the tag. At the end of the forward movement of slide **52**, tag slide **124** is fully retracted and teeth **126** are in a position to engage the surface of the next tag in the stack.

Pressure plate **26**, as best seen in FIGS. **3** and **4**, is spring-loaded towards the front of the apparatus to hold tags T securely. Pressure plate **26** has a downwardly extending portion **128** which carries a horizontally extending protrusion **130**. One end of a spring **132** is anchored to protrusion **130**. Spring **132** extends around a roller **134**, mounted near the front of the housing section **22**, and then rearwardly towards the back of housing A where the other end thereof is affixed to an upwardly extending protrusion **136** mounted to housing A.

Downwardly extending portion **128** of pressure plate **26** rides along a slot **138** between the upper surface of housing section **22** and the main portion of housing A so as to guide the movement of the pressure plate. Spring **132** serves to urge pressure plate **26** towards anvil **24** in a substantially uniform manner, even when a large number of tags are situated between the pressure plate **26** and the anvil **24**. The length of spring **132** and the method of mounting thereof assures a substantially uniform pressure, regardless of the size of the stack. The position of roller **134** can be adjusted such that the amount of pressure applied to the stack by spring **132** is never so great as to interfere with the movement of the first tag in the stack relative to the remainder of the stack. Thus, jamming is effectively eliminated.

FIGS. **9** through **12** schematically illustrate the operation of the apparatus of the present invention. FIG. **9** shows all parts in their initial positions. After loading a clip of fasteners F into the apparatus and situating a stack of tags T between anvil **24** and pressure plate **26**, the front end of the apparatus is held adjacent the article to be tagged. Trigger **12** is depressed. The depressing of trigger **12** causes lever **38** to move slide **52** forward.

The forward movement of slide **52** causes several operations to occur. Slide **52** carries along with it slide **70** (spring-loaded against the rear of recess **66**). Slide **70** has plunger **72** mounted to the front end thereof. The tip of plunger **72** will engage the T-bar end **32** of a fastener F aligned with needle C causing it to be severed from the clip and moved forward into the bore of needle C. The forward movement of slide **52** (through arm **114**, pin **116**, and track **118**) will also cause lever **120** to move tag slide **124** form its original position, adjacent the stack, to a position proxiamte needle C, such that the first tag on the stack will be in alignment with needle C. This position is shown in FIG. **10**.

Further forward movement of slide **52** will first cause part **94**, and thus needle C, to move forward, piercing the aligned tag and then cause lever **120** to move back towards its original position, causing slide **124** to return to a position in alignment with the tag stack. This is illustrated in FIG. **11**.

At this point, the operator depresses trigger **14**. This causes slide **70** to move forward relative to slide **52** (within recess **68**) such that the T-bar end **32** of fastener F is moved through and pushed out of the end of needle C. At the same time, the depression of trigger **14** causes lobe **86** to engage finger **64** of the latch spring **62**, and release the latch, permitting slide **52** to move back toward its rearward position due to the urging of torsion spring **42**. As slide **52** returns to its rearward position, pin **116** rides along track section **118***a* without causing movement of tag slide **124**. However, slide **52** causes part **94** and, thus, needle C to retract to its original position, through the action of spring **112**, which interconnects slide **52** with section **106** of part **94**. In addition, as slide **52** retracts, feed wheel **90** is advanced by the action of pawl **88** such that the T-bar end **32** of the next fastener F is automatically aligned with the needle bore. Upon completion of the rearward movement of slide **52**, the apparatus again appears as illustrated in FIG. **9**. The apparatus and article **30** can then be moved apart such that the tag, now loosely retained behind anvil **24**, can be easily removed from the apparatus. The apparatus is now ready for the next tagging operation.

It will now be appreciated that the present invention relates to a tag dispensing and attaching apparatus which facilitates the tagging operation without fatiguing the operator. This is accomplished by automatically feeding a tag into alignment with an advancing needle, by depressing a first trigger. A second trigger is then depressed to dispense the fastener through the tag and the article to be tagged. Thus, the apparatus is operated entirely by the squeezing of triggers, the pressure of which can be regulated such that operator fatigue is greatly reduced.

Fatigue is further reduced because the apparatus is light in weight, easily manipulatable, and can be operated by a single hand of the operator. It is mechanically simple, operates reliably, and constructed relatively of

inexpensive parts which cooperate together for a long, useful life with a minimum of maintenance.

The apparatus is designed to utilize conventional plastic fasteners which are inexpensive and widely available from a number of different companies. The apparatus is designed for use with tags of a variety of different dimensions and can operate satisfactorily with large numbers of tags without jamming.

It should also be appreciated that although the apparatus of the present invention is primarily designed for hand-held use and has thus been described for this mode of operation, the apparatus could easily be adapted for use for powered operations. In such operations, external means such as pneumatic cylinders, solenoids, or the like, could be utilized to depress trigger **14** on command and automatically cycle to depress trigger **12** a specified time after the depression of trigger **14**. This would virtually completely automate the tagging operation.

FIGS. **13** through **30** illustrate a second preferred embodiment of the present invention. The second preferred embodiment includes a tag engaging mechanism on the tag feed slide which utilizes the driving force to cause a tag engaging pin to grip a tag and thereafter move the tag into alignment with the needle. The mechanism automatically releases the tag as the slide is retracted. This insures positive gripping of the tag as it is moved in the aligned position and, at the same time, prevents the tag from being scratched or ripped as the slide retracts.

Another feature included in the second embodiment is a different mechanism for transferring force from the actuator to the tag slide. In the first embodiment, depression of the actuator caused reciprocation of the slide from its remote position to a position where an engaged tag was aligned with the needle and back to the remote position. Thus, movement of the slide and advancement of the needle occurred simultaneously. In the second embodiment, these functions occur sequentially. Initial depression of the actuator causes the slide to engage a tag and move same into alignment with the needle. Further depression of the actuator causes the needle to penetrate the aligned tag. It is only after the fastener has been dispensed and the actuator is returning to the undepressed position through action of the spring that the slide returns to its original position.

Other alternative structures are also present in the second embodiment. For example, the second embodiment utilizes a standard indexing wheel-type fastener feed, a different latch mechanism, a spring loaded front end portion, and a different slide structure.

With reference to FIG. **13**, there is shown a hand-held tag attacher generally indicated at **200** having a body or frame generally indicated at **201**. The body **201** includes a body section **202** and a body section **203** secured together by screws **204**. The body sections **202** and **203** include a manually engageable handle **201'**. The body sections **202** and **203** have respective holes **205** and **206** for mounting a shaft or pivot **207**. The shaft **207** extends through holes **208** in spaced wall members **209** of an actuator generally indicated at **210**. The actuator **210** comprises a trigger or lever **211** pivotally mounted by the shaft **207**. A lever generally indicated at **212** is pivotally mounted on a shaft **213** which passes through a hole **214** and extends into holes **215** in body sections **202** and **203**. The lever **212** has a pair of generally upwardly extending arms **216** and **217**. A spiral spring **218** received about the shaft **213** between the lever **212** and the body section **202** is secured at one end portion to the arm **216** and at its other end portion to the body **202** by a screw **219** received in a hole **220**. The spring **218** urges the lever **212** clockwise (FIGS. **13** and **14**) and the lever **212** in turn cams the lever **211** clockwise (FIGS. **13** and **14**).

Another actuator generally indigated at **221** is also pivotally mounted on the shaft **207**. The actuator **221** comprises a lever or trigger **222** disposed between the wall members **209**. A spiral spring **223** received about the shaft **207** is secured at one end portion **224** in a hole **225** in the lever **222** and at its other end portion **226** engages the actuator **210** at cutout **225'**.

A slide generally indicated at **227** is guided in a track **228'** for straight line reciprocating movement. The slide **227** includes a pair of spaced projections **228** defining a slot **229** which receives the arm **217** of the lever **212**. The slide **227** is shown to mount or carry another slide generally indicated at **230**. The slide **227** has a rod **231** about which a compression spring **232** is received. The spring **232** bears at its one end portion against the slide **227**. The other end portion of the spring **232** fits into a recess **230'** (FIG. **20**) in the slide **230** and urges terminal end **233** of the slide **230** against face **234** of the slide **227**. The slide **230** has a tongue **235** which fits into a groove **236** (FIG. **20**) in the slide **227**. A push rod **237** secured to the slide **230** passes through a hole **238** in the slide **227**. The push rod **237** is aligned with a needle bore **239** of a needle **240**. A bar section **32** of a fastener F is shown in FIG. **14** to be aligned with the push rod **237** and with the needle bore **239**. Manual operation of the actuator **210** will pivot the actuator **210** counterclockwise (FIG. **14**) which will pivot the lever **212** counterclockwise and will move the slide **227** and the slide **230** which it carries forward (to the left in FIG. **14**). The push rod **237**, however, moves only partially between its initial and its actuated position to a partially actuated position in which the aligned bar section **32** is in a position inside the needle bore **239** (FIG. **15**).

As the lever **212** moves to its actuated position, a latch generally indicated at **241** in FIGS. **15**, **17** and **18** latches the lever **212** to the lever **222**. A tooth **242** is secured to the arm **217** and can engage an arcuate tooth or ridge **243** on the lever **222**. The arm **217** is somewhat flexible and resilient and can deflect as the lever **212** moves in the direction of arrow **244** in FIG. **17** and encounters the ridge **243**. As shown in FIG. **17**, the tooth **242** has a cam surface **245** which cooperates with a cam surface **246** on the tooth **243** to facilitate latching of the lever **212**. When the tooth **242** clears the tooth or ridge **243** during movement of the lever **212** in the direction of arrow **244**, the arm **217** returns resiliently to cause the tooth **242** to snap into the position shown in FIG. **18**. The latch **241** prevents the lever **212** from being returned to its initial position by the spring **218** until the actuator **221** is operated. It should be noted that the convenient disposition at the handle **201'** of actuators **210** and **221** enables the actuator **210** to be operated by the user's middle, ring and small fingers and enables the actuator **221** to be operated by the user's index finger. In order to eject or push the bar section **32** the rest of the way out of the needle bore **239**, the user operates the actuator **221** using the index finger. The lever **222** has an arm **222'**, which in the position of FIGS. **14** and **15**, is clear of the path of movement of the slide **227**, but in the position of FIG. **15** can move into a pocket or recess **227'** in the slide **227**.

As seen in FIG. **15**, lever **212** is latched to the lever **222** by the latch **241**. The lever **212** remains latched

against return under the influence of the spring **218**. As the lever **221** is moved from its initial position to its actuated position shown in FIG. **16** the tooth **243** slides along the tooth **242** until the tooth **243** clears the tooth **242**. FIG. **16** shows the lever **212** returning to its initial position because the latch **241** has been tripped by the action of the tooth **243** clearing the tooth **242**. Thus, the termination or terminal end **247** of the tooth **243** is considered to be a tripping means. A stop screw **248** enables the stop position of the lever **222** to be adjusted. The screw **248** determines when during the cycle of the attacher **200** the latch **241** is tripped. As shown in FIG. **16**, the latch **241** is not tripped until the push rod **237** has pushed the bar section **32** out of confinement in the needle bore **239**.

With reference to FIGS. **13** and **14**, the body **201** is shown to include mounting structure generally indicated at **249**. The structure **249** is suitably secured to the front end portion of the body section **202**. The body section **202** has a front wall **250** to which vertically spaced guide pins **251** are mounted. The front wall **250** has a keyhole-shaped slot **252** and the mounting structure **249** has a side opening or slot **253**. A slide **254** has vertically spaced through-holes **255** in which the guide pins **251** are received. The pins **251** guide the slide **254** for straight line sliding movement. Compression springs **256** received about respective guide pins **251** bear against the front wall **250** and against the slide **254**. In the initial or retracted position of the slide **254** and the needle **240** the springs **251** are under light loading. The springs **251** are relatively weak and only need be strong enough to assure that the slide **254** and the needle **240** which it mounts will move from the extended or actuated position of FIG. **16** to the initial or retracted position of FIG. **14**.

It is seen in FIGS. **13** and **14** through **16** that the slide **227** has an integrally molded actuator or driver **257** which is adapted to move the slide **254** from the retracted position (FIG. **14**) to the extended or actuated position (FIGS. **15** and **16**). As best shown in FIG. **14**, the driver **257** is spaced from the needle slide **254** and this provides a lost-motion connection **258** between the actuator **257** and the slide **254**. When the slide **227** and the actuator **257** which it carries have moved to the extended position (FIGS. **15** and **16**), the actuator **257** has moved through an aperture **259** in rear wall **260** of the mounting structure **249** and has moved the slide **254** to a position in which pointed end **262** of the needle **240** has passed through a tag T at an attaching or advanced position and through merchandise M. The mounting structure **249** includes members **249'** and **249"** secured together by screws **263**. In the position shown in FIG. **15**, the springs **256** are compressed to a greater extent than in the position of FIG. **14**. When the latch **241** is tripped, the retracted positions and the springs **256** return the slide **254** and the needle **240** to the retracted position.

It should be noted that when the actuator **221** is moved to its actuated position following latching of the latch **241**, the arm **222'** enters the recess **227'** in the slide **227** and pushes on surface **227"** to move the push rod **237** from the partially actuated position of FIG. **15** to the actuated position shown in FIG. **16**, thereby ejecting the bar section **32** from the needle **240**. When the arm **222'** pushes on the surface **227'** the slide **230** moves forward relative to the slide **227** and compresses the spring **232**. When the actuator **221** is released, the spring **232** return the slide **230** to its initial position relative to the slide **227** in which rear face **233** of the slide **230** is again in abutting contact with the face **234** of the slide **227**.

With reference to FIG. **20**, the body **201** is shown to have a guideway **266** for receiving a clip C of the fasteners F The clip C has bar sections **32** and button sections **34** joined by respective filament sections **36**. The bar sections **32** are joined to a rod or runner F1 by connectors F2. The guideway **266** is comprised in part by guide portion **267** (FIG. **19**) of the body section **202** and in remainder by surface **268** (FIG. **20**) of body section **203**. The guideway **266** guides the clip C so that a toothed feed wheel **269** or the like engages or meshes with the connectors F2. A flexible resilient spring finger **270** mounted on a slide **271** cooperates with the toothed wheel **269** to advance the clip C by one pitch or bar section-to-bar section distance. The slide **271** is slidably mounted for straight line movement in a guideway **272** (FIG. **13**) formed by the body **201**. The slide **271** has an inclined cam track **273** which receives a pin **274** on a slide **275**. The slide **275** has a pair of speed projections or abutments **276** and **277** which provide a lost-motion connection **275'**. The slide **227** fits between the projections **276** and **277**. Abutment face **279** on the slide **227** is adapted to contact the projection **277**.

It should be noted that the actuator **221** has a front surface **276'** which cooperates with the projection **276** when the actuator **221** is actuated from its position shown in FIG. **15** to its position shown in FIG. **16** to move the slide **275** a short distance in the forward direction, that is, to the left in FIGS. **13** and **14** for example. This movement of the slide **275** causes the pin **274** in cooperation with the cam slot or track **273** to move the slide **271** downwardly as viewed in FIGS. **13** and **14** for example, thereby moving the spring finger **270** over a tooth of the toothed wheel **269** and thus cocking the spring finger **270**. No motion is thereby imparted to the toothed wheel **269**. When the latch **241** is tripped, the lever **212** returns to its initial position and moves the slide **227** rearwardly as viewed in FIGS. **13** and **14** for example. When the abutment face **279** contacts and pushes on the abutment **277** near the end of travel of the slide **227**, the slide **227** moves the slide **275** rearwardly as viewed in FIG. **16** for example. This causes the pin **274** cooperating with the cam slot **273** to move the slide **271** and the spring finger **270** upwardly. The spring finger **270** cooperates with a tooth of the toothed wheel **269** to advance the toothed wheel **269** to bring the next bar section **32** into alignment with the needle bore **239**.

With reference to FIGS. **13** and **14**, there is shown a knife **280** which severs the bar section **32** from the respective connector F2 when the push rod **237** first starts to push on the bar section **32**. A plate **281** is disposed between the toothed wheel **269** and the push rod **237**. A manually releasably anti-backup pawl **282** detents the toothed wheel **269**.

With reference to FIGS. **13** and **19**, a cam generally indicated at **283** extends through a slot **202'** in the body section **202** and is connected to the slide **227** by screws **284**. The screws **284** pass through holes **285** in the cam **283** and are threaded into holes **286** in the slide **227**. Because the slide **227** moves in a straight line, the cam **283** also moves in a straight line. The cam **283** comprises a cam plate **287** with a cam track or slot **288**. The track **288** has a dwell portion and an inclined or ramp portion **290**. A pin **291** secured to the cam plate **287** is received in a straight guide slot **292** in a guide plate **293**. The guide plate **293** is secured to the body section **202** by

screws **294** threadably received in holes **295**. A hopper is generally indicated at H'. The guide plate **293** is also secured to a floor or bottom **296** of an angle-shaped hopper member **297** of the hopper H' by screws **298** and **299** passing through respective holes **300** and received in a tubular spacer **301**. The hopper member **297** also has an upstanding wall **302**. A screw **303** passes through a hole **304** in the wall **302** and is threadably received in a hole **305** in the body section **202**. A thumb screw **306** passes through an elongated slot **307** in a gate **308**, through a hole **309** in the wall **302**, and is threadably received in a hole **310** in the body section **202**. By loosening the thumb screw **306** the position of the gate **308** can be adjusted so that the terminal end **311** of the gate **308** only allows one tag at a time to be fed to the attaching position. This adjustment also enables the gate opening to be varied to accommodate tags of different thicknesses.

The plate **293** also has a hole **312** for receiving a pivot pin **313** secured to a lever **314**. A nut **315** received by a threaded portion **316** of the pin **313** retains the pivot pin **313** in the hole **312**. The lever **314** rotatably mounts a roller **317** received in the cam track **290**. Initially the cam plate **287** is in the position shown in FIG. **19**. The roller **317** is at or near one end of the ramp portion **290** of the cam track **288**. As the slide **227** moves forward, the cam **283** also moves forward and the lever **314** is urged counterclockwise (FIG. **19**) until the roller **317** encounters the dwell portion **289** of the cam track **288**. As the cam **283** continues to move forward, no movement is imparted to the lever **314** because the dwell portion **289** is aligned with the line of movement of the cam **283**.

As illustrated in FIG. **19**, the cam **283** and the lever **314** are disposed beneath the bottom **296**. The stack S of tags T is supported by the bottom **296**. The stack S is also positioned against the gate **308**. A pressure plate **318** bears against endmost tag TE1 at one end of the stack S and urges the stack S toward front wall or wall member generally indicated at **319**. The bottom **296** has an elongated guide slot **320**. A screw **321** extends through the slot **320** and is threadably received in the lower portion of the pressure plate **318**. The screw **321** guides the pressure plate **318** along the groove **320**, but the head of the screw **321** is not tightened against the bottom **296** so that the pressure plate **318** can move freely along a straight line in the directions of arrow **322**. A bracket **323** secured to the underside of the bottom **296** mounts the wall member **319**. Screws **324** pass through the wall member **319** and are threadably received by the bracket **323**.

With reference to FIG. **21**, the wall member **319** is shown to have a pair of spaced guide members **325** and a support **326** spaced between the guide members **325**. The support member **326** has a groove **296'** for receiving the front end of the plate **296**. The guide members **325** have tongues or guides **327**. The guide members **325** and the support **326** are joined to a connecting member **328**. Another connecting member **329** is secured to the guide members **325** and to the support **326** by screws **330** which pass through holes **329'** and are threadably received in holes **331**. The guide members **325** slidably mount a slide generally indicated at **332**. The slide **332** is shown to have grooves **333** into which the tongues or guides **327** extend. The tongues **327** cooperate with the grooves **333** and guide the slide **332** for free sliding movement. The slide **332** has a pair of spaced cutouts **334** and **335**. A hole **336** aligned with the cutouts **334** and **335** rotatably receives a shaft **337**. An arm or lever **338** is disposed at the cutout **335** and is secured to the shaft by a pin **339**. The pin **339** is received by the arm **338** and passes through a hole **340** in the shaft **337**. An annular hub **341** is disposed at the cutout **334** and is adjustably secured to the shaft **337** by a set screw **342**. The hub **341** receives feed pins **343**.

As shown in FIGS. **21**, **25** and **26**, for example, there is provided an arrangement or means generally indicated at **344** for providing resistance to movement of the slide **332** at the initial or retracted position (FIG. **25**) of the slide **332** and at the extended or attaching position (FIG. **26**), but provides virtually no resistance to movement of the slide **332** between its initial position and its extended position. The resistance providing arrangement **344** includes a yieldable member specifically a ball **345** urged by a spring **346**. The spring **346** is received in a hole or recess **347** in a reduced thickness section **348** of the slide **332**. The ball **345** projects out of the recess **347** in the positions shown in FIGS. **25** and **26**. In the FIG. **25** position, the ball **345** is in a recess **349** in the support **326**. The ball **345** cooperates with the recess **349** by detenting action to releasably hold the slide **332** in that position. In the FIG. **26** position, the ball **345** is in the recess **350** in the support **326**. The ball **345** cooperates with the recess **350** by detenting action to releasably hold the slide **332** in that position.

With reference to FIGS. **20** and **22**, the slide **332** is shown in its initial or retracted position. The lever **314** has an end portion **351** which extends through the cutout **335**. One surface **352** of the end portion **351** is shown in contact with wall **353** of the slide **332**. The arm **338** is disposed between a surface **354** and an adjustable stop screw **355** threadably received in the slide **332**. The stop position of the arm **338** against the screw **355** determines the rotational position of the shaft **337** and in turn determines the feeding position of the feed pins **343**. As also shown in FIG. **22**, the feed pins **343** are out of feeding engagement with the endmost tag TE in the stack S.

During the early portion of the cycle of operation, the cam **283** moves forward, that is, toward the left side of FIG. **20**, and this causes the lever **314** to be cammed in a counterclockwise direction. As the surface **354** of the end portion **351** moves into contact with the arm **338**, the arm **338** is moved counterclockwise to the position shown in FIG. **23**, and this causes the feed pins **343** to move into feeding engagement with the endmost tag TE. In so doing, the points **356** (FIGS. **29** and **30**) of the feed pins **343** penetrate the endmost tag TE. The pins move from the position shown in FIG. **22** to the position shown in FIG. **23** without any movement being imparted to the slide **332**. This assures that the points **356** of the pins **343** are embedded into the endmost tag TE before the tag TE is attempted to be moved forward to the attaching position shown in FIG. **24**.

It is preferred that the slide **332** itself offer low resistance to sliding in order to minimize operator fatigue, as the invention pertains to a hand-held tag attacher **200** powered only by the operator (without the assistance of external power sources). The simple yet effective resistance device **344** provides adequate initial resistance to hold the slide **332** releasably in the initial or retracted position shown in FIGS. **20** and **22** until the feed pins **343** have moved into feeding engagement with the endmost tag TE. It should be noted that the lever **314** applies force directly to the feed pins **343** through the arm **338** and the rod **337** and not to the slide **332** when the lever **314** moves counterclockwise (FIGS. **20** and **22**).

As the force applied by the lever **314** increases and overcomes the force of the resistance means **344**, the slide **332** moves from the position shown in FIGS. **20**, **22** and **23** toward the position shown in FIG. **24**, and in so doing the ball **345** moves out of the recess **349** and rides on surface **357** of the support **326** which lies between the receses **349** and **350**. As the slide **332** is composed of molded plastics material, the ball **345** rides easily with low friction on the surface **357**. As the slide **332** is driven by the lever **314**, the feed pins **343** remain embedded in the tag TE because of the driving force applied by the lever **314**. More particularly, the arm **338** is held against the stop screw **355** so that the angle at which the pins **343** attack the tag TE is always the same. The stop screw **355** enables the angle of attack A' (FIG. **29**) to be manually adjusted to optimize the engagement of the feed pins **343** with the tag TE. When the slide **332** arrives at its forward or advanced position shown in FIG. **26**, the ball **354** enters the recess **350**. The tag TE is now in the forward or attaching position as shown in FIG. **24**.

It is seen in FIG. **22** that the end edges T1 of the tags T in the stack S are against the gate **308**. The end edges T1 of the tags T are thus in a straight line. Because the feed pins **343** always positively engage the endmost tag TE in the stack S before the slide **332** is moved and because the slide **332** always moves through the same distance, the end edge T1 is always brought to the same position relative to the axis **240'** (FIG. **24**) of the needle **240**. This is important because the tag TE should not be fed at a position in which the axis **240'0** intersects the tag TE too close to the end edge T1 which could result if the feed pins **343** only engaged the tag TE after the slide **332** started moving toward the attaching position. Also, the hole in the tag TE made by the needle should not be through preprinting on the tag TE.

When the slide **332** has been fed to the position shown in FIG. **26**, the cam **283** is in a position in which the roller **317** is at the dwell portion **289**. Therefore, continued forward movement of the slide **227** and of the cam **283** does not impart any further movement to the lever **314**. As the slide **227** continues to move forward the needle slide **254** is moved forward by the actuator **257** and the needle **240** is pushed through and makes its own hole in the tag TE. After the bar section **32** is pushed through the needle **240** by the push rod **237**, by operation first of the actuator **210** and by operation second of the actuator **221**, the latch **241** is tripped and the , slide **227** returns to its initial or retracted position (FIG. **13**). In that the cam **283** is connected directly to the slide **227**, the cam **283** also returns to its initial position (FIG. **19**). As the cam moves rearwardly, no motion is imparted to the lever **314** because the follower **317** is in the dwell portion **289** of the cam track **288**. As soon as the follower **317** moves along the ramp portion **290**, the lever **314** is moved clockwise about pivot pin **313**. This movement of the lever **314** continues until the cam **283** is in its initial position shown in FIGS. **19** and **20**, at which the ball **345** again enters the recess **349**.

The action of the slide **332** and the lever **314** before their return to their initial positions should now be examined. When the slide **332** is in the position of FIG. **26**, the resistance means **344** holds the slide **332** in its forward or extended position. As the lever **314** moves clockwise (FIG. **26**), the surface **352** of the lever **314** moves against the surface **353** of the slide **332**. When the surface **352** is against the surface **353**, the surface **354** of the lever **314** is out of contact with the arm **338**. Thus, there is now no force acting on the arm **338** causing the pins **343** to remain at their feeding angle of attack '. When the force exerted by the lever **314** overcomes the force of the resistance means **344**, the slide **332** can return to its retracted position. The resistance means **344** is effective to prevent the slide **332** from moving out of its extended position (FIG. **26**) until driven out by the lever **314**. This assures that there is enough space between the arm **338** and the surface **354** to enable the arm **338** (the shaft **337** and the feed pins **343**) to rotate before the slide **332** starts returning to its initial position. This assures that the feed pins **343** will not drag on the surface of the tag TE as the slide **332** returns.

The feed pins **343** are identical and are identically oriented. With reference now to FIGS. **29** and **30**, the configurations and orientation of the feed pins **343** is illustrated in greater detail. Although the end portion of each feed pin **343** is generally cone-shaped, it is ground so that each feed pin **343** can easily move into feeding engagement with the tag TE as the feed pins **343** move from the position shown in FIG. **22** to the position shown in FIG. **23**, and also so that the feed pins **343** can easily thereafter move out of feeding engagement with the tag TE as the feed pins move from the position shown in FIG. **24** to the position shown in FIG. **25**. As best shown in FIG. **29**, the front face **357** of the feed pin **343** is along a line **343A** generally perpendicular to the tag TE. The angle A" is about 90° or less to assure that the pin **343** is not cammed out of feeding engagement with the tag TE during advancement of the slide **332**. Rear face **358** of each feed pin **343** makes an angle B, of about 30° with the tag TE. The included angle C' made by the front and rear faces **357** and **358** is about 60°. Although other angles can be used, it is most advantageous that the pins **343** can readily engage and thereafter disengage from the tag TE. It is apparent that the pins **343** attack the tag TE at an acute angle A' (shown to be about 60°) so as to be self-energizing during feeding movement, toward the left in FIG. **29**, of the pins **343**.

The pressure plate **318** has a pressure-concentrating projection **318'** adjacent end **311** of the gate **308** to assure the endmost tag TE is against the end wall **319** at the end **311**. With reference to FIG. **19**, the pressure plate **318** has a groove **359** extending from end-to-end in its front face to provide clearance for the feed pins **343** in the event the operator operates the tag attacher **200** without having any tag T in the hopper H. This will obviate scoring the pressure plate **318** and dulling the feed pins **343**. The feed pins **343** are, however, removable for replacement if necessary with new sharp pins, if desired. The feed pins **343** are simply press-fitted into holes in the hub **341**.

With reference to FIG. **19**, a plate or bracket **360** is secured to the floor **296** by screws **361**. A tube **362** is secured to the plate **360** in alignment with a hole **363** in the plate **360**. The tube **362** has a reduced end portion **364** with a threaded hole **365**. A rod **366** secured to the pressure plate **318** extends through a light spring **367**, a tubular washer **368** and a short distance into a spring **369** which is heavier than the spring **367**. A screw **370** has a head **371** which abuts terminal end **369'** of the spring **369**. The screw **370** is threaded into the hole **365** and a knob **372** is tightened against the end portion of the screw **370**. The pressure which the springs **367** and **369** exert on the pressure plate **318** can be regulated by turning the knob **372**. A lock nut **373** can hold the screw **370** in any adjusted position. The tube **362** enables a

relatively long spring or set of springs to be used. The longer the springs, the more constant is the force exerted by the pressure plate **318** against the stack S throughout the travel of the pressure plate **318**.

With reference now to the general operation of the hand-held tag attacher **200**, let it be assumed that a clip C of fasteners F has been loaded into the attacher **200** to a position in the guide slot **266** in which a bar section **32** of a fastener F is in alignment with the needle bore **239** and the push rod **237**. The clip C is advanced to this position by manually operating the actuator **210** one or more times. Now a stack S of tags T can be loaded into the hopper H as shown in FIG. **13** for example.

With the handle **201'** held in the operator's hand, the middle, ring and small fingers are used to operate the actuator **210** and move it counterclowckwise from its initial position shown in FIG. **14** to its actuated position shown in FIG. **15**. Movement of the actuator **210** away from its initial position, rotates the lever **212** counterclockwise against the force of the return spring **218**. The lever **212** moves the slide **227**, the slide **230** and the push rod **237** out of their retracted positions. Only a small amount of movement of the push rod **237** causes the bar section **32** to move relative to the knife **280** to sever the bar section **32** from the respective connector F2 and as movement of the push rod **237** continues, the bar section **32** is moved further and further along the needle bore **239**. While the slide **227** is moving forward, the cam **283** also moves forward, thus pivoting the lever **314** counterclockwise (FIG. **20**) to cause the feed pins **343** to move into feeding engagement with the endmost tag TE and thereafter move the slide **332** from its retracted position (FIG. **20**) to its extended position (FIG. **24**). Movement of the slide **332** ceases when the slide **332** contacts the member **328** which occurs when the roller **317** is at the dwell portion **289**. when the lever **212** has moved to the position shown in FIG. **15**, the teeth **242** and **243** have engaged to latch the latch **241**. In addition, the actuator **257** has moved the needle slide **254** to the position shown in FIG. **15** in which the needle **240** has moved forward along axis **240'** to pierce a hole in the tag TE and pass through the merchandise M, and also the push rod **237** has moved the bar section **32** to a partially advanced position along the needle bore **239**. Now the operator can operate the actuator **221** using the index finger Operation of the actuator **221** causes arm **222'** to move the slide **230** forward relative to the slide **227** to eject the bar section **32** and to trip the latch **241**. Operation of the actuator **221** also causes the face **276'** to push against the abutment **276** to move the slide **271** and the pawl **270** downwardly. As soon as the latch **241** is tripped by the tooth **242** losing engagement with the tooth **243**, the return spring **218** starts returning the lever **212** to its initial position (FIG. **14**). Release of the actuator **221** causes return spring **223** to move the actuator **221** clockwise from the position shown in FIG. **16**. As arm **222'** of the actuator **221** moves clockwise, the springs **256** move the needle slide **254** and the needle **240** which it mounts toward the retracted position (FIG. **14**). The attacher **200** can now be moved relative to the merchandise M so that the filament section **36** can pass out of the slots **253**, **252** and **266**. Also, the spring **232** moves the slide **230** rearwardly until its end face **233** contacts the face **234** on the slide **227**. As the slide **227** nears its retracted position shown in FIG. **14**, the face **279** of the slide **227** contacts abutment **277** and moves the slide **275** rearwardly to move the slide **271** and the feed pawl **270** upwardly to advance the toothed wheel **269** by one pitch. During return of the slide **227**, the cam **283** also moves rearwardly and at first the roller **317** cooperates only with the dwell portion **289** but thereafter when the roller **317** cooperates with the ramp portion **290**, the lever **314** is pivoted clockwise and the slide **332** is returned to its retracted position. This completes one cycle of operation, and the attacher **200** is now ready for another cycle.

It can sometimes happen that, during use of a tag attacher, a jam occurs. This may be due for example to defective fasteners. The hand-held tag attacher of both disclosed embodiments is powered totally by the operator applying force to the actuating means disposed at the handle. The operator can cause tags to be fed one-by-one from the hopper, advance the clip of fasteners and move the push rod solely by the operator-supplied energy. The operator has the "feel" of the tag attacher and can sense a jam and hence can readily interrupt the cycle to avoid aggrevating the jam and/or damaging the tag attacher. Air or electrically operated tag attachers lack this advantage.

While only two preferred embodiments of the present invention have been disclosed herein for purposes of illustration, it is obvious that many variations and modifications could be made thereto. It is intended to cover all of these variations and modifications which fall within the scope of the present invention, as defined by the following claims.

I claim:

1. Method of attaching tags to merchandise using fasteners, with each fastener having a bar section and a button section joined by a filament section, comprising the steps of: providing a hand-held tag attacher having a manually engageable handle, a hopper adapted to receive a stack of tags, and a feed pin movably mounted on a slide, applying a force to the feed pin for moving the feed pin to a stop position at a predetermined acute angle of attack with respect to the tag and for thereafter moving the pin and the slide to move the tag to an attaching position while maintaining the feed pin at the predetermined angle of attack, the tag being in alignment with a needle having a needle bore and a side opening when the tag is at the attaching position, making a hole in the tag by driving the needle through the tag at the attaching position, inserting the needle through the merchandise, and driving a bar section of a fastener through the needle bore, the tag and merchandise while the related filament section extends through the side opening.

2. Method of attaching tags to merchandise using fasteners, with each fastener having a bar section and a button section joined by a filament section, comprising the steps of: providing a hand-held tag attacher having a manually engageable handle, a hopper adapted to receive a stack of tags, and a feed pin mounted on a slide, applying holding force against the slide to hold the slide releasably in a retracted position, applying force to the feed pin for moving the feed pin from an ineffective position out of feeding engagement with a face of an endmost tag in the stack to an effective position in feeding engagement with the face of the endmost tag, force for moving the feed pin being operative to move the slide from the retracted position to an attaching position when the holding force is overcome, the tag being in alignment with a needle having a needle bore and a side opening when the tag is at the attaching position, making a hole in the tag by driving the needle through the tag at the attaching position, inserting the

needle through the merchandise, and driving a bar section of a fastener through the needle bore, the tag and merchandise while the related filament section extends through the side opening.

3. Method as defined in claim 1, further including the step of returning the slide to the retracted position without applying any force to the feed pin to enable the feed pin to return to its ineffective position.

4. Method of attaching tags to merchandise using fasteners, with each fastener having a bar section and a button section joined by a filament section, comprising the steps of: providing a hand-held tag attacher having a manually engageable handle, a hopper adapted to receive a stack of tags, and a feed pin, applying a first force to the feed pin for moving the feed pin from an ineffective position out of feeding engagement with an endmost tag in the stack to an effective position in feeding engagement with the endmost tag while simultaneously applying a second force in opposition to the first force to prevent the pin from moving to feed the tag, moving the feed pin to feed a tag to an attaching position when the first force overcomes the second force, the tag being in alignment with a needle having a needle bore and a side opening when the tag is in the attaching position, thereafter making a hole in the tag, inserting the needle through the merchandise, and thereafter driving a bar section of a fastener through the needle bore, the tag and merchandise while the related filament section extends through the side opening.

5. Method of attaching tags to merchandise using fasteners, with each fastener having a bar section and a button section joined by a filament section, comprising the steps of: providing a hand-held tag attacher having a manually engageable handle, a hopper adapted to receive a stack of tags, and a feed pin, applying force to the feed pin for moving the feed pin laterally from an ineffective position out of feeding engagement with a face of an endmost tag in the stack to an effective position in feeding engagement with the face of the endmost tag with the feed pin being at an acute angle of attack against the face of the tag, so that during continued application of the force the acute angle of attack helps hold the feed pin in self-energizing relationship in feeding engagement and the continued application of force moves the feed pin and hence the endmost tag to an attaching position into alignment with a needle having a needle bore and a side opening, making a hole in the tag by driving the needle through the tag at the attching position, inserting the needle through the merchandise, and driving a bar section of fastener through the needle bore, the tag and merchandise while the related filament section extends through the side opening.

6. Method of attaching tags as defined in claim 5, including the step of resisting movement of the feed pin in the longitudinal direction until the feed pin has moved from the ineffective position to the effective feeding position.

7. Method as defined in claim 5, wherein the step of moving the feed pin includes rotating the pin from the ineffective position to the effective position, and resisting tag feeding movement of the feed pin until the feed pin has rotated from the ineffective position to the effective position.

8. Method as defined in claim 7, wherein the step of moving the feed pin includes rotating the pin from the ineffective position to the effective position.

9. Method of attaching tags to merchandise using fasteners, with each fastener having a bar section and a button section joined by a filament section, comprising the steps of: providing a hand-held tag attacher having a manually engageable handle, a hopper adaptd to receive a stack of tags, and a feed pin, moving the feed pin from an ineffective position out of feeding engagement with an outer face of an endmost tag in the stack to an effective position at an acute angle of attack in feeding engagement with the outer face of the endmost tag, moving the feed pin longitudinally while the feed pin is in feeding engagement with the endmost tag to separate the endmost tag from the remainder of the stack and to feed the separated tag to an attaching position in alignment with a needle having a needle bore and a side opening, making a hole in the tag by driving the needle through the tag at the attaching position, inserting the needle through the merchandise, and driving a bar section of a fastener through the needle bore, the tag and merchandise while the related filament section extends through the side opening.

* * * * *