Jan. 20, 1942. J. M. HOTHERSALL 2,270,300

MACHINE FOR ASSEMBLING SPOUTS TO CONTAINERS

Filed April 12, 1939 6 Sheets-Sheet 1

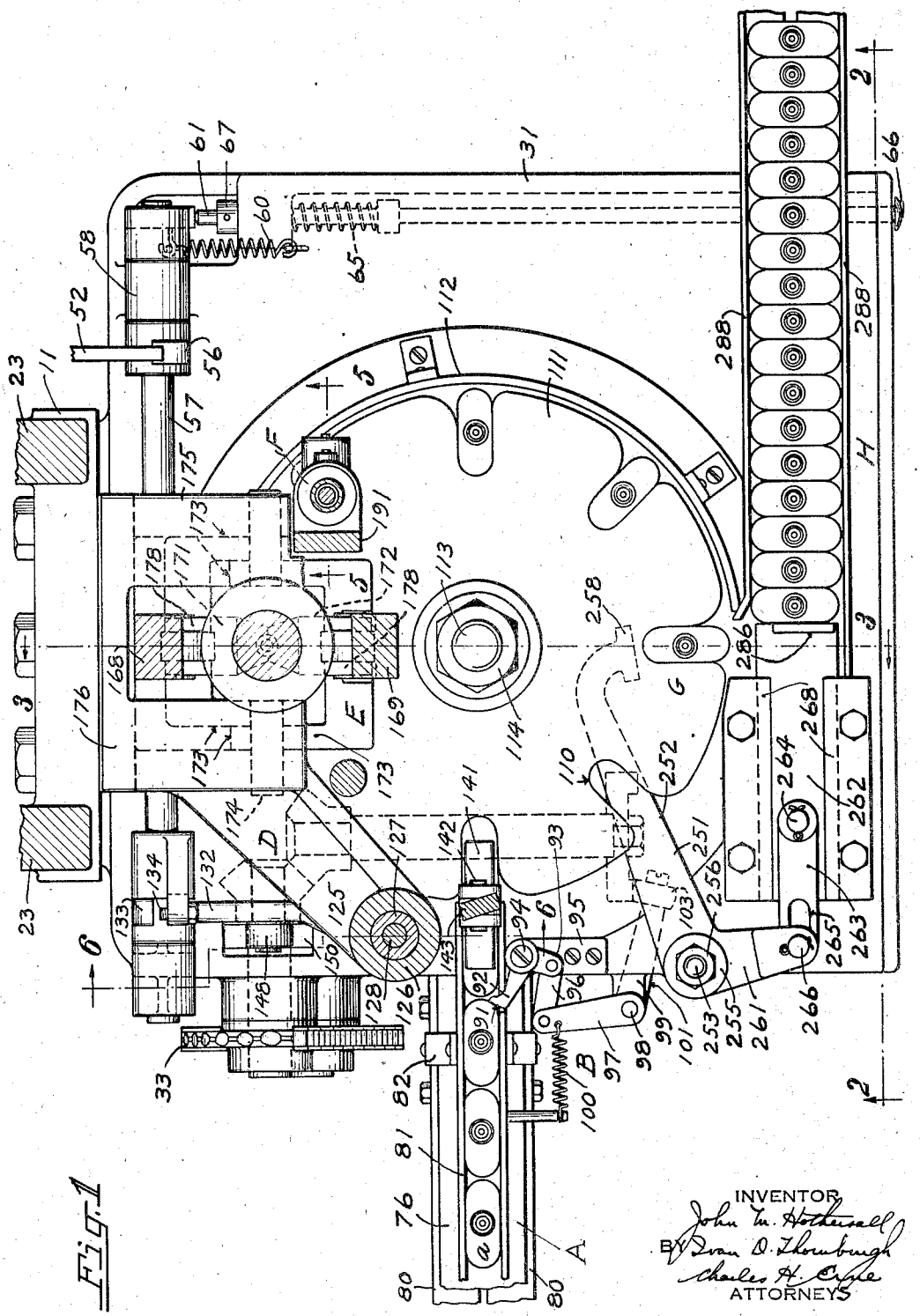

Fig. 1

INVENTOR
John M. Hothersall
By Dean D. Thornburgh
Charles H. Coyle
ATTORNEYS

Jan. 20, 1942. J. M. HOTHERSALL 2,270,300

MACHINE FOR ASSEMBLING SPOUTS TO CONTAINERS

Filed April 12, 1939 6 Sheets-Sheet 2

Fig. 2

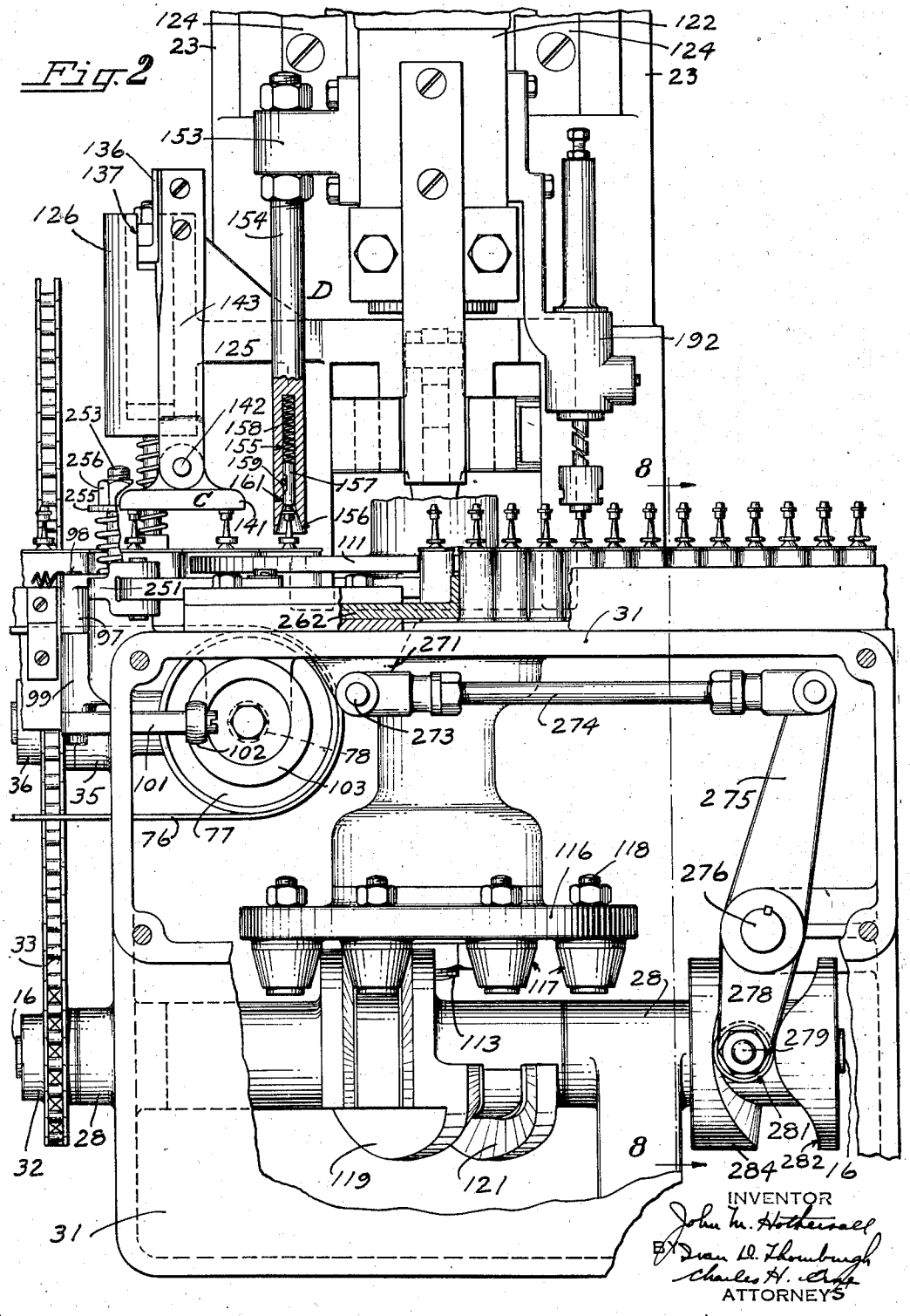

INVENTOR
John M. Hothersall
BY Dean D. Thornburgh
Charles H. Cole
ATTORNEYS

Jan. 20, 1942. J. M. HOTHERSALL 2,270,300

MACHINE FOR ASSEMBLING SPOUTS TO CONTAINERS

Filed April 12, 1939 6 Sheets-Sheet 3

Fig. 3

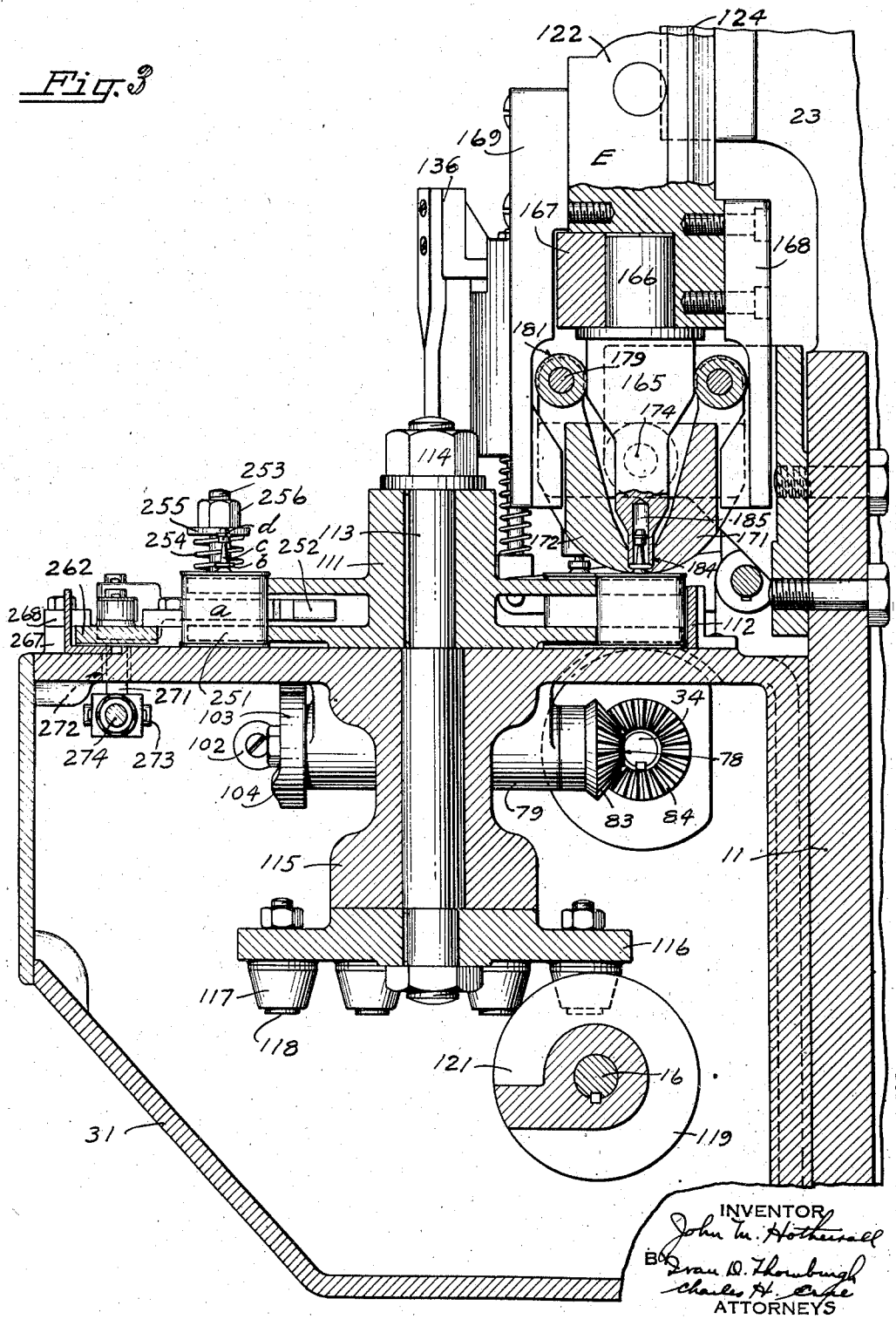

INVENTOR
John M. Hothersall
BY Dean D. Thornburgh
Charles H. Capel
ATTORNEYS

Jan. 20, 1942. J. M. HOTHERSALL 2,270,300

MACHINE FOR ASSEMBLING SPOUTS TO CONTAINERS

Filed April 12, 1939 6 Sheets-Sheet 4

Fig. 4

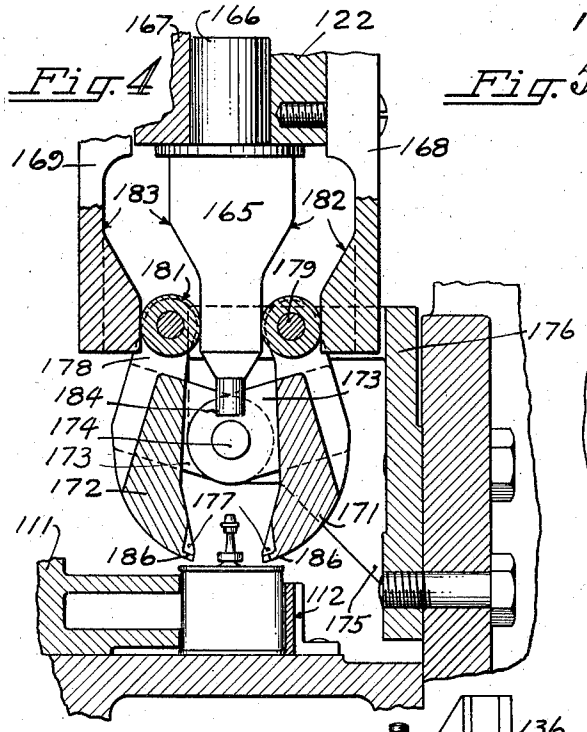

Fig. 5

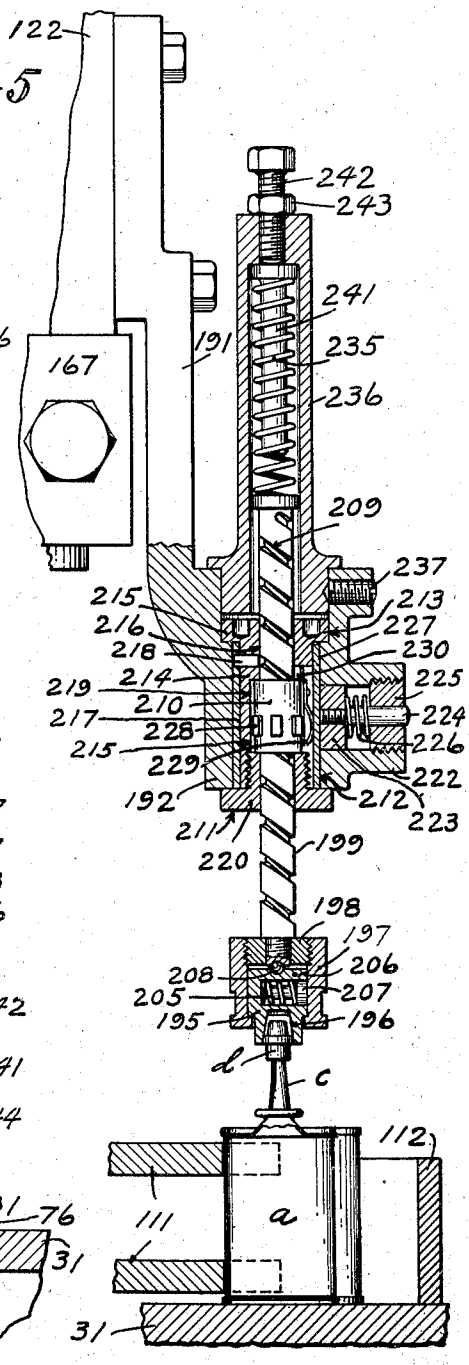

Fig. 6

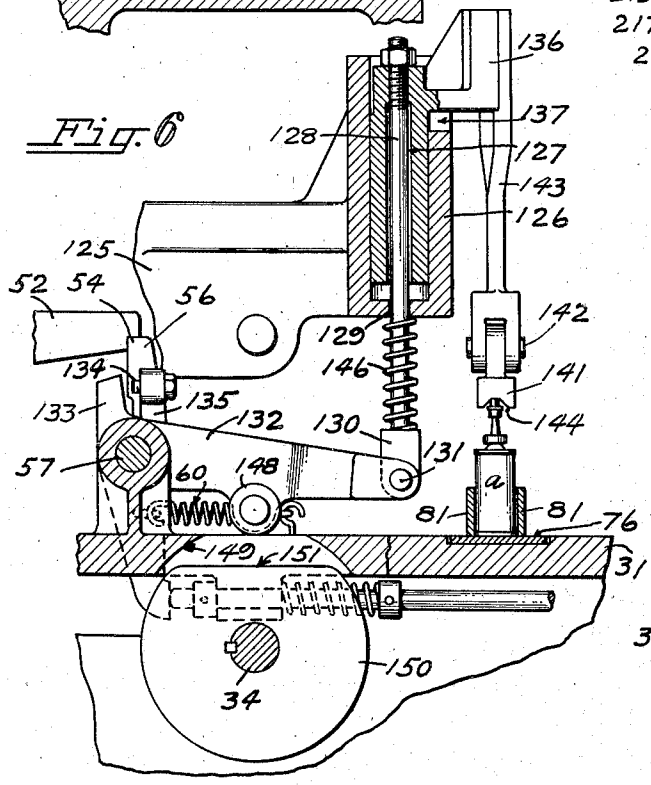

INVENTOR
John M. Hothersall
BY Dean D. Thornburgh
Charles H. Clyde
ATTORNEYS

Jan. 20, 1942. J. M. HOTHERSALL 2,270,300

MACHINE FOR ASSEMBLING SPOUTS TO CONTAINERS

Filed April 12, 1939 6 Sheets-Sheet 5

Fig. 7

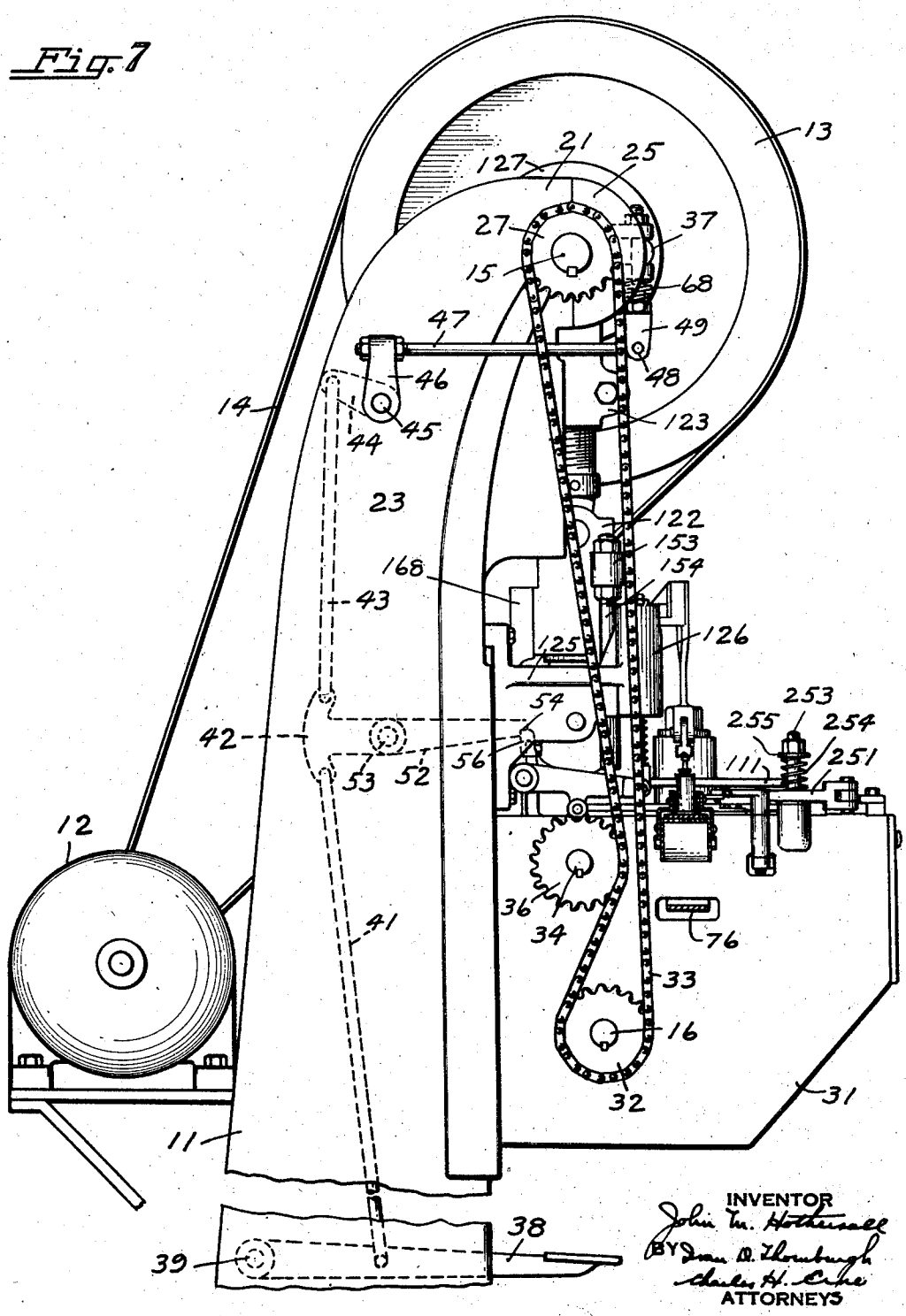

INVENTOR
John M. Hothersall
BY Ivan D. Thornburgh
Charles H. Cone
ATTORNEYS

Jan. 20, 1942. J. M. HOTHERSALL 2,270,300

MACHINE FOR ASSEMBLING SPOUTS TO CONTAINERS

Filed April 12, 1939 6 Sheets-Sheet 6

Fig. 8

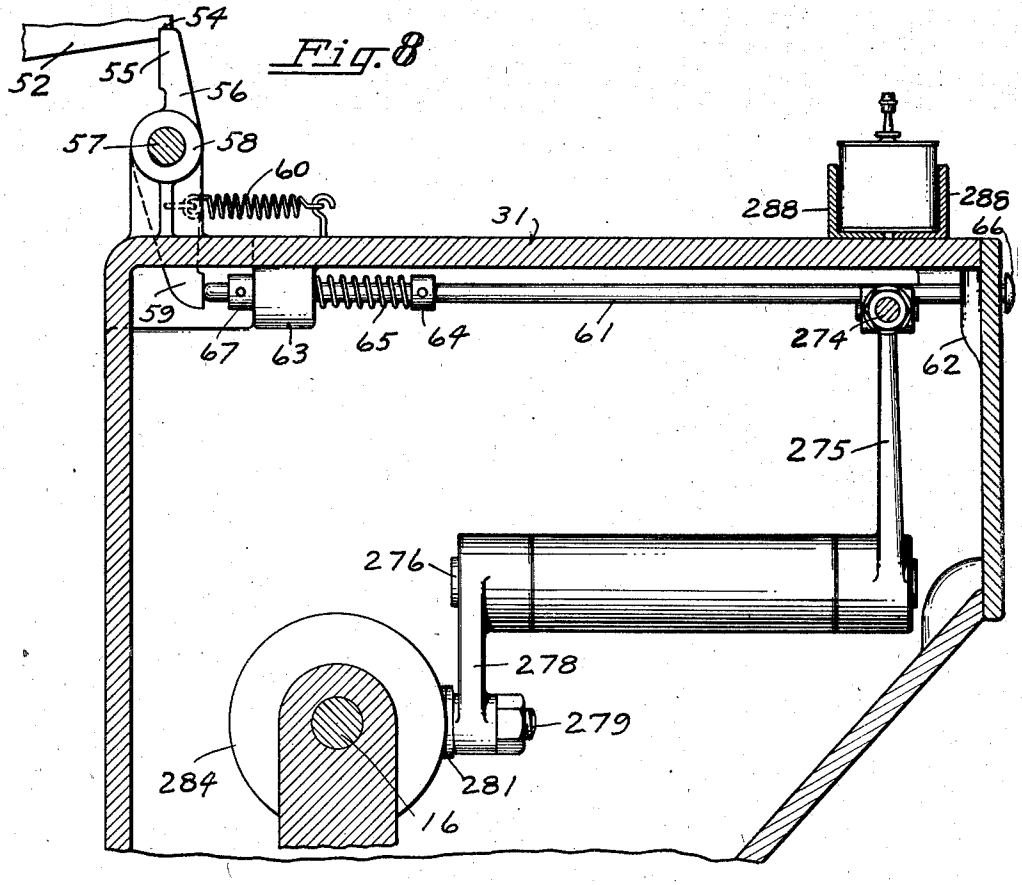

INVENTOR
John M. Hothersall
BY Dean P. Thornburgh
Charles A. Ashe
ATTORNEYS

Patented Jan. 20, 1942 2,270,300

UNITED STATES PATENT OFFICE

2,270,300

MACHINE FOR ASSEMBLING SPOUTS TO CONTAINERS

John M. Hothersall, Brooklyn, N. Y., assignor to American Can Company, New York, N. Y., a corporation of New Jersey

Application April 12, 1939, Serial No. 267,481

11 Claims. (Cl. 29—33)

The present invention relates to machines for securing preformed spouts to a wall of a container or can and has particular reference to an assembling machine in which preformed spouts are secured in place in a cup-necked can nozzle by a squeezing operation that reforms parts of both spout and container neck, such a spout and neck preferably being of the type disclosed in my issued Patent No. 2,167,654, granted August 1, 1939, for Method of securing soft metal spouts to containers.

An object of the invention is the provision of an assembling machine which includes automatically operating devices for securely squeezing the spout and can parts in a joint forming operation while the spout and can are held in proper alignment and in fully seated position.

A further object is the provision in a machine of this character of automatic testing mechanism by means of which the absence of a can and spout or the improper association of the same is detected to the end that other devices function to stop the machine until the deficiency is supplied.

Numerous other objects and advantages of the invention will be apparent as it is better understood from the following description, which, taken in connection with the accompanying drawings, discloses a preferred embodiment thereof.

Referring to the drawings:

Figure 1 is a plan view of a preferred embodiment of the present invention, parts being broken away to show more clearly certain of the operating mechanism;

Fig. 2 is a sectional view partially in front elevation taken substantially along the line 2—2 in Fig. 1, with parts broken away;

Fig. 3 is a longitudinal vertical section taken substantially along the line 3—3 in Fig. 1, and showing certain of the spout and can holding, squeezing and assembling operating parts;

Fig. 4 is a fragmentary section taken in the same plane and showing a part of the mechanism disclosed in Fig. 3, certain of the operating parts being in a different position;

Fig. 5 is a fragmentary sectional view taken substantially along the line 5—5 in Fig. 1 and illustrating the cap applying device;

Fig. 6 is a sectional view of the testing device as viewed along the broken line 6—6 in Fig. 1;

Fig. 7 is a side elevation of the apparatus with parts broken away and drawn to a smaller scale; and

Fig. 8 is a fragmentary section taken on the line 8—8 in Fig. 2 and showing certain details of the driving mechanism.

The apparatus disclosed in the drawings as a preferred embodiment of the present invention is adapted to receive filled containers or cans in processional order. The type of can shown and described herein is designated by the letter *a* and is preferably formed with a nozzle extension *b* which is adapted to seat a soft metal spout *c*. The top of the spout *c* is formed to be closed by a threaded cap *d*. Each can *a* with its supported spout *c* loosely resting in the nozzle *b* on which is loosely placed the cap *d*, is admitted one by one into a pocket of an intermittently movable, horizontally disposed turret and while in the turret is positioned at various operating stations and is subjected to several operations which result in finally securing the can, spout and cap in liquid-tight relations thereby sealing in the can contents which may be oil or other liquid, following which the completely assembled filled can is automatically discharged from the turret.

As best illustrated in Fig. 1 the cans *a* coming into the machine are carried in processional order on a feed-in belt conveyor A. The row of cans is intermittently arrested in its travel with the conveyor A by an escapement B which admits each can singly to an initial position beneath a testing device C (see also Fig. 2). The testing device C operates upon two adjacent cans *a* so that each can is tested twice, with a can in front and upon being moved into a second testing position, with the can following. Moving the can after its first test and before its second places it into a pocket of the intermittently movable horizontally disposed turret.

After the second test, partial rotation of the turret carries the can *a* and its parts into a spout centering station D (Figs. 1 and 2). With the spout *c* and its cap *d* fully aligned or centered with the axis of the can, at the next step movement of the turret the can parts are introduced into a joint forming station E (Figs. 3 and 4). Here the neck or nozzle part *b* of the can is squeezed over the lower part of the spout *c* at the same time reforming the engaged portion of the spout thus producing a tight connection between the can and the spout. This constitutes the first joint.

The next step rotation of the turret introduces the can with its now attached spout into a cap securing station F (Fig. 5). Here the cap *d* is rotated into threaded position on the top or up-

per end of the spout. This provides a second joint.

The fifth and sixth stations of the turret are idle stations and no operation takes place upon the can, spout or cap. At the next following step rotation of the turret, however, this being at the seventh station, the closed can is subjected to an ejecting or discharging operation which places each can onto a discharge table H as it leaves the turret. Table H receives the completely assembled and sealed cans in a row, from which they may be removed as desired.

The general form of mechanism of the present invention may be likened to a conventional type of press consisting of frame, crank shaft, slide and crosshead and in which the turret constitutes a part of the can feed. This press frame is indicated generally by the numeral 11 and the operating parts of the machine are driven by any suitable prime mover such as a motor 12 (Fig. 7) which effects rotation of a fly wheel 13, through the medium of a belt 14 associated with a crank shaft.

In general there are two main shafts from which the several devices and mechanisms more directly derive their power. This includes an upper horizontal main drive or crank shaft 15 which carries the fly wheel 13 and a lower horizontal drive shaft 16. The upper crank shaft 15 is journaled in bearings 21 formed in the top of uprights 23 of the press frame 11 and the shaft is held in place by bearing caps 25. This is a usual press construction.

The fly wheel 13 preferably carries parts of a conventional slip clutch connection which connects or disconnects the fly wheel with and from the drive shaft 15. This is a well known feature in press manufacture and it is thought need not be specifically detailed. At the other side of the machine the shaft 15 carries a sprocket 27 which is used for power connection with the lower shaft 16.

Shaft 16 is journaled in bearings 28 (Fig. 2) formed in a table extension 31 of the frame 11. The shaft 16 extends beyond its bearings on both sides. On the end of the shaft to the left, as viewed in Fig. 2, is mounted a sprocket 32. A chain 33 which takes over both sprockets 27 and 32 (see also Fig. 7) provides a chain drive between the upper and lower shafts.

An intermediate horizontal shaft 34 journaled in a single bearing 35 formed in the frame 11 also derives its driving power through the chain 33. For this purpose the end of the shaft 34 which extends on the outside of the bearing 35 carries a sprocket 36 which engages with the chain 33. Thus it will be observed that the chain 33 provides for synchronous rotation of the three shafts 15, 16 and 34.

In addition to the usual form of clutch for the fly wheel 13 already mentioned, there is also provided a band brake for the shaft 15. Such a brake is also a usual part of a press and in this description will be only briefly mentioned. It is designated broadly by the numeral 37, in Fig. 7 and operates in the usual manner, that is, the brake is applied to the crank shaft when the clutch of the flywheel is disengaged. The brake releases from the shaft when the clutch connects the fly wheel with the crank shaft.

The throwing in of the clutch is effected by a trip or foot treadle 38 (Fig. 7) pivoted at 39 to the frame 11. The treadle is connected by means of a rod 41 with a treadle arm 42 and a second rod 43 connects the treadle arm with an arm 44 secured to a rock shaft 45. Shaft 45 is journaled in suitable bearings formed in the frame of the machine and also carries a lever arm 46 having connection with a link rod 47.

One end of the rod 47 is pivotally connected at 48 to a clutch control, generally indicated by the numeral 49. Such a clutch control operates with the clutch of the fly wheel 13 in the well known manner and further detail of this feature is thought unnecessary. It will be understood that depression of the foot treadle 38 connects the crank shaft 15 with the rotating fly wheel 13 and at the same time the brake 37 is released. Release of the foot treadle has the opposite effect on clutch and brake.

Provision is made for holding the brake in released position during the normal operation of the machine regardless of the foot actuation of the foot treadle. A lever 52 is provided which may be a forward extension of the treadle arm 42, as indicated in dotted lines in Fig. 7. The treadle arm with its extension is preferably pivotally mounted on a short horizontal shaft 53 so that when the treadle 38 is depressed and the arm 42 is lowered, the extension 52 is raised. The forward end of the extension 52 is notched as indicated at 54 (see also Fig. 8) and this end at the time the foot treadle is depressed, is raised to permit engagement with a release catch device by means of which the brake and the clutch are maintained in proper operating position for a full cycle independent of actuation of the foot treadle 38.

The release catch comprises an arm 56 which is mounted on a rock shaft 57 journaled in a bearing 58 formed in a bracket extending up from the table extension 31. The shaft 57 also carries an arm 59 which extends down through the table extension. A spring 60 is connected with the arm, one end of the spring being secured to the table extension. This spring normally holds the rock shaft 57 in the position shown in Fig. 8 so that its arm 56 is engaged in the notch 54 of the extension 52. This holds the treadle parts in the position shown in Fig. 7, which is the operating position for the machine.

Provision is made for manually stopping the machine when desired by drawing back the arm 56 of the catch device and disengaging it from the notch 54 of the arm extension 52. A safety stop rod 61 (Fig. 8) is horizontally disposed below the table extension 31 and is mounted to slide in a front bearing 62 and a rear bearing 63, each bearing being an integral part of the table extension. Rod 61 carries a collar 64 and a spring 65 is interposed between the bearing 63 and this collar.

This normally holds the rod out or to the right as viewed in Fig. 8 and in this position a button head 66 on the front end of the rod is spaced away from the front of the machine and is in a convenient position to be pushed in by the operator of the machine. A second collar 67 secured to the inner end of the rod 61 provides a stop for this outer position of the safety rod. The inner end of the rod 61 provides an abutment for the lower end of the arm 59 which is at all times held against the end of the rod by the spring 60.

When the button head 66 of the rod 61 is pressed in by the operator and the rod is slid to the left (Fig. 8), it rocks the arms 59, 56 and also the rock shaft 57 in a clockwise direction. This moves the arm 56 out of engagement with

the arm extension 52 and the foot treadle being no longer held thereupon moves up into a non-operated position. This lifting of the foot treadle 38 and the rods 41, 43 and corresponding movement of parts connected therewith is effected by expansion of a spring 68 which is a part of the clutch control mechanism 49. When not blocked by the release catch device just described this spring 68 besides holding the foot treadle in un-operated position also holds the brake 37 in braking position on the crank shaft.

Considering now the machine parts more in detail, the conveyor A comprises an endless belt 76 (Fig. 2) which takes over and is driven by a pulley 77 carried on a horizontal drive shaft 78 (see also Fig. 3). This shaft is journaled in bearings 79, extending down from the table extension and forming a part of the frame of the machine.

The upper run of the belt 76 constitutes the floor for the cans *a* which are thus conveyed over a feed table 80 of the table extension 31. Guide rails 81 mounted on suitable brackets 82 secured to the feed table, keep the cans *a* in a straight line of travel, the two foremost cans in the line being in testing position and still on the belt as will be further explained.

The pulley 77 is rotated with its shaft 78 through suitable connection with the intermediate shaft 34. For this purpose the shaft 78 (Fig. 3) at one end carries a bevel gear 83 which meshes with a corresponding gear 84 keyed to the shaft 34.

As a can of the row of cans *a* approaching testing position passes the escapement mechanism B the next following can is engaged and the row of cans pauses, the belt sliding beneath but not advancing the cans.

The escapement comprises a bell crank lever 91 having a long finger 92 (Fig. 1) and a short finger 93, the bell crank lever being mounted for rocking movement on a vertical pin 94. This pin is carried in a bracket 95 mounted on the table extension 31.

The short arm 93 is connected by a link 96 with a horizontally disposed lever arm 97 which is secured to a vertical rock shaft 98 carried in a bracket 99 extending laterally from the table extension. A spring 100 is interposed between the arm 97 and a pin on the table extension and this tends to hold the bell crank lever in the position shown in Fig. 1.

The rock shaft 98 at its lower end carries an arm 101 (Figs. 1 and 2) and on the free end of the arm a cam roller 102 is rotatably mounted (see also Fig. 3). This roller is adapted to ride against the face of a cam 103 which is secured to the end of the shaft 78 opposite to the gear 83.

Cam 103 is formed with a raised portion 104 which during one revolution of the shaft 34 engages and pushes out the roller 102 so as to rock the arm 101 and its shaft 98. This moves the short arm 92 of the bell crank lever out of the path of travel of the cans and permits the row of cans to move forward one can space.

When a can *a* is first released by the bell crank lever escapement device and moves forward with the belt 76, it comes to rest in the first testing position. At the end of the first testing operation this can moves forward into the second or final testing station and the next following can is then in the first testing position. After the machine is once started it will be observed that there are always two cans in position for testing, provided there is no interruption in the feeding of the cans.

The can coming into the final testing position also enters into a pocket 110 of a horizontal turret 111 (Figs. 1, 2 and 3). This turret will first be considered since it is effective in determining the exact position of the two cans being tested, after which consideration of the testing step will be resumed. The turret 111 is intermittently rotated and is at rest during the test. In all positions while the can is in a turret pocket, the can rests on the table extension 31. It is also slid over the table when moved from place to place being held in the turret pocket by a circular guide rail 112 supported by brackets mounted on the table.

The turret is mounted on a vertical shaft 113, the shaft at its upper end being reduced in diameter as best shown in Fig. 3 where it is keyed to the hub of the turret. A locknut 114 is threaded on the upper end of the shaft 113 and this securely holds the turret against the shoulder of the shaft. The shaft at its lower end extends through a bearing 115 formed as an integral, downwardly extending part of the table extension 31. Below this bearing the shaft carries the driven part of a Geneva mechanism, the driving part being primarily effective through proper connection with the lower drive shaft 16.

A Geneva disc 116 (Figs. 2 and 3) is keyed to and is bolted on the lower end of the shaft 113. This disc carries a series of tapered rollers 117 which are mounted on the lower ends of pins 118. The pins are threadedly secured in fixed position in the Geneva disc. These pins are held in place by locknuts and are equally spaced around the periphery of the Geneva disc in a well known manner.

The drive shaft 16 carries a mutilated barrel cam or Geneva drive 119 which is formed with an interrupted groove 121 adapted to engage one of the tapered rollers 117 and to shift the roller so that the Geneva disc 116 and the shaft 113, as well as the turret 111, are caused to be held for a rest period or are moved in a step rotation in order to advance the turret pockets 110 so that the cans contained therein will be properly presented for the various operations of the machine.

Brief reference has already been made to the usual press construction used in the apparatus shown in the drawings. The crank shaft 15 actuates the usual form of crosshead, designated by the numeral 122 (Figs. 2 and 7), which is operated from the crank shaft through the medium of a pitman 123. The crosshead 122 slides up and down in suitable guideways formed in the frame uprights 23 and carries operating parts associated with the various stations. Slide gibs 124 screwed to the uprights 23 retain the crosshead in sliding condition.

Much of the mechanism C used for testing the two cans at the end of the conveyor belt 76 is carried by and moves up and down with the crosshead 122. Some of the parts are yieldingly mounted and where the test shows the absence of a can and its parts, the release catch arm 56 is moved to disengage the lever 52 and stop the machine. The testing step is best shown in Figs. 2, 6 and 7 and reference should now be had to these figures.

The testing device C is mounted on a bracket extension 125 which may be an integral part of the crosshead 122. This bracket extension is enlarged into a vertically extending boss 126 which

provides a slide seat for and which encloses a cylindrical block 127. A vertically disposed rod 128 extends into the block and is clamped at its upper end by a clamp nut.

Rod 128 also extends down through an opening 129 in the bottom of boss 126 and an enlarged lower head 130 of the rod is pivotally connected at 131 to the free end of a lever 132. The lever 132 is loosely mounted on the release catch rock shaft 57 and when moved far enough, as when can or can parts deficiency is detected in either or both of the two testing stations, it shifts the release catch arm 56.

A short projection 133 extends up from the lever 132 adjacent its mounting on the shaft 57 and when the lever 132 makes its full movement, this projection strikes against a setscrew 134 threaded in a short lever arm 135 fixed on the rock shaft and moves the lever arm and shaft thus throwing out the release catch arm 56 and stopping the machine. This moving of the lever 132 for either a short stroke, which will not engage the parts 133, 134, or for its full stroke when it stops the machine, will now be considered.

At the top and front, the cylindrical block 127 is formed with a bracket 136 (Figs. 2 and 6) which projects forward through a slot 137 cut in the boss 126. This bracket provides a connection with testing elements which are brought down with each lowering of the crosshead 122 to strike against the two spout caps of the cans in the initial and in the final testing positions at the forward end of the belt 76. Obviously if there is no can with its spout and cap in the proper testing position there will be no engagement of the testing elements.

A cam detecting strike block 141 is pivotally mounted at 142 on the lower end of a vertically disposed bar 143 which at its upper end is secured in fixed position on the bracket 136. The lower end of the strike block is grooved as a 144 and it is this lower surface which is engaged by the cap *d* of a can *a* at either of the two testing positions.

When two cans *a* with spouts *c* and caps *d* are in the proper positions for testing and when the crosshead 122 descends, the strike block 141 moves down and engages the two caps as shown in Figs. 2 and 6. The two cans in this instance stop further descent of the strike block and the parts 143, 136, 127, 128 and lever 132 come to rest. This constitutes the short stroke of the lever previously referred to and is not sufficient to disconnect the release catch arm 56 from the lever 52.

This however, is not the full movement of the crosshead 122 and therefore the bracket extension 125 continues its downward travel, the boss 126 moving down over the now stationary cylindrical block 127. A spring 146 is mounted on the rod 128 being confined between the rod head 130 and the bottom of the boss and this spring is compressed during this continuance of the downward travel of the boss.

The two cans *a* with their spouts and caps, being the same height, the strike block 141 remains in a horizontal position (Fig. 2) for that testing cycle. If however only one can spout and cap is present in either the first or second testing positions, such a can part is engaged as before but with the further downward movement of the crosshead, the strike block shifts on its pivotal mounting 142. The engaged side being blocked by the can, remains uppermost as the strike block moves into an inclined position.

Since the rod 128 moves down its full distance at such a time, the lever 132 is moved for its full stroke and this throws out the release catch arm 56 through the parts 133, 134, 135 and by reason of the rocking of the shaft 57. Obviously the same long stroke will be brought about and the release catch arm 56 will move if both testing positions are devoid of cans for here again there is nothing to stop the downward movement of the strike block 141. Thus it will be seen that the machine stops if two cans are not properly positioned.

Provision is made for preventing this disengagement of the treadle lever 52 from the catch arm through actuation of the lever 132 except in proper time with the descent of the crosshead 122. The same mechanism also provides for raising of the lever, after it has been depressed, independently of the raising of the crosshead. This will now be considered.

The lever 132 (Fig. 6) carries a cam roller 148 and the table 31 is cut away at 149 directly beneath the roller. Into this opening the upper part of a cam 150 extends. Cam 150 is keyed to the shaft 34 and when the roller 148 is moved down into the opening with rocking of the arm 132 it engages the periphery of the cam.

The cam is flattened at 151 and it is only when this flat section is presented at the top during the rotation of the cam, as shown in Fig. 6, that the lever arm can make its full stroke. At any other time the cam acts as a barrier and prevents sufficient movement of the lever to disconnect the parts 56, 57. In addition to this timing function, the cam also acts to again restore the lever 132 and its connected parts and to bring it into raised position as rotation of the cam passes the flat section beyond the cam roller.

It will be recalled that the can at the final testing station is also in a pocket 110 of the turret 111. At the next step rotation of the turret, this tested can is moved into the spout centering station D. The centering of the spout on the central axis of the can is effected by a simple sleeve device carried on the crosshead 122 and best illustrated in Figs. 1 and 2.

The crosshead 122 carries a bracket 153, which is on the same side as the bracket extension 125, and a vertically disposed centering rod 154 is mounted on the bracket. At its lower end, the rod is hollow, there being a central bore 155 having a flared mouth 156 at the bottom. The can when at rest at station D is directly in axial alignment with the rod 154 and as the latter moves down with the lowering of the crosshead, the cap *d* enters the flared mouth of the bore and the tapered walls of the latter center both cap and spout *c* on the can.

A pressure pin 157 is slidably disposed in the bore 155 and is backed up by a spring 158 confined within the bore above the pin. A stop key 159 extends transversely of the centering rod 154 and across the edge of the bore and the pressure pin is flattened at 161 along the adjacent side so that this pin can move in a restricted range but cannot be pushed out by the spring. As the centering rod first comes down over the can spout and cap the lower end of the pressure pin strikes against and presses down on the cap holding it securely in aligned position. The pressure pin also acts to disengage the cap from

the centering rod when the crosshead again ascends after a centering action.

The joint forming station E where the can with its aligned spout comes to rest after the next step advancement of the turret 111, is directly under the crosshead 122. Part of the mechanism at this station is carried by the crosshead 122 and therefore moves up and down with it. Part is carried on the press frame 11 at the base of the uprights 23. This is best shown in Figs. 3 and 4.

The crosshead 122 carries a cam wedge 165 which is formed at its upper end into a stem 166. This stem is clamped securely in place on the crosshead by a bearing clamp 167. The crosshead also carries a rear cam plate 168 and a front cam plate 169 and these parts cooperating with the cam wedge 165 provide the controlled movement for the joint forming elements.

The joint forming devices comprise a rear squeezer jaw 171 (Figs. 1, 3 and 4) and a front squeezer jaw 172. Each jaw is formed with a pair of side arms 173, those of the rear jaw extending forward while the front jaw arms project to the back and overlap the other arms where they are alongside each other (Fig. 4). This provides for pivotal mounting of the jaws on a pair of axially aligned but spaced apart pivot pins 174, one being on each side.

The pivot pins 174 are mounted in side walls 175 of a bracket 176 which is bolted to the frame 11 at the base of the frame upright 23. This mounting holds the jaws in the same horizontal plane but allows for their pivotal movement on the pins 174. Such a pivotal movement, brought about when the crosshead descends, gives a squeezing action which is effective on the nozzle *b* of the can *a* at station E and also effective on the base of the spout *c* where it is enclosed in the nozzle. This will be further explained.

The squeezer jaws 171, 172 at their lower inner ends are hollowed out in die pockets 177, each having a cylindrical inner wall. Each jaw also extends up above its side arms 173 in spaced lugs 178. Each pair of lugs at their upper ends are tied together by a pin 179 which provides a shaft for a cam roller 181.

The cam roller 181 for the rear jaw 171 is disposed in a cam track 182 formed by stepped and inclined parallel cam surfaces formed by the rear face of the came wedge 165 and the front face of the cam plate 168. In the same way the front jaw roller 181 is disposed in a cam track 183 formed by stepped and inclined parallel cam surfaces of the front face of the cam wedge 165 and the rear face of the cam plate 169.

The two cam tracks 182, 183 are symmetrical as to the vertical axis of the cam wedge so that as the crosshead 122 moves up and down and slides the cam track surfaces alongside of the rollers 181, the two jaws 171, 172 are moved in and out together as they rock on the pivot pins 174.

The crosshead is up and in the position of Fig. 4 when the can *a* is brought to rest in station E. At that time the rollers 181 are closest together and the lower ends of the jaws 171, 172 are at their widest separation.

The lower end of the cam wedge 165 as at 184 (Figs. 3 and 4) is reduced to the diameter of the can nozzle *b* and a central bore 185 (Fig. 3) extends up vertically from the terminal end of the reduced cam wedge section. As the descending crosshead 122 carries the cam wedge down, the can cap *d* and spout *c* enter this bore 185, the cam wedge moving down until its lower rim strikes the nozzle *b*. At the same time the squeezer jaws 171, 172 move in as their rollers 181 are separated by riding on the inclined sections of the cam tracks 182, 183.

Fig. 3 shows the fully closed position of the squeezer jaws, the closed jaws completely confining the can nozzle parts. When closed the cylindrical walls of the die pockets 177 strike against the reduced cylindrical wall of the lower end 184 of the cam wedge and the ends of the jaws below these pockets (designated by the numeral 186) slip in under the recessed part of the can nozzle and provide an anvil against which the nozzle *b* of the can *a* is forced vertically by the descending cam wedge. The lower rim of the cam wedge section 184 squeezes the spout and nozzle parts together in a vertical thrust.

The coming together of the jaws 171, 172, squeezes the nozzle and confined spout base laterally so that the soft metal spout is reformed and the nozzle is bent in and closely pressed against the spout as it too is reshaped. This produces a tightly sealed joint and completes the assembly of can and spout.

At the next step movement of the turret 111, the can *a* and its tightly joined spout *c* on which the cap *d* is still loosely resting, are brought into the cap securing station F. Here the can is directly beneath a rotatable element of the cap securing device which is carried by the crosshead 122.

A bracket 191 (Figs. 1, 2 and 5) is bolted to the side of the crosshead 122, this being on the side opposite to the bracket extension 125. This bracket extends down in a position below and alongside of the cam wedge 165 where it is enlarged in a boss 192 in which the cap securing device is carried.

The cap *d* is rotated in the proper direction to tightly screw it down on its threaded connection with the spout *c* while the can *a* is at rest at the station F. As the crosshead descends a spring held friction cup 195 is brought down over the cap, this cup having a conical hollow seat 196 at its lower end, the walls of which frictionally engage over the cap as best shown in Fig. 5.

The cup 195 is located inside of a securing head 197, the lower end of the cup extending through an opening in the bottom of the head. This head is a mere sleeve which is threaded at its upper end over a screw plug 198 carried on the lower end of a vertically disposed ratchet shaft 199 which in turn extends up through the boss 192.

The cup member frictionally engages over the can cap *d* and as the securing head 197 turns under the influence of the ratchet it rotates the cap down on its threaded connection with the upper end of the spout. The cup however is not secured to the head sleeve but is frictionally held so that as long as the cap *d* turns freely on the threads of the spout, the cup will turn with the head. When the cap is once seated and screwed tightly in place the cup member stops rotation as the securing head completes its full cycle of rotative movement.

The frictional engagement between the cup member and the head is brought about by the action of a spring 205 which is located in a horizontal transverse bore 206 extending in from one side of the cup member 195. This spring bears against the head and is mounted on the body

of a sliding pin 207 also located in the spring bore.

The outer face of the head of the pin is pressed against the inner wall of the sleeve head 197 and provides the desired friction. A thrust ball 208 is disposed between the top surface of the cup member 195 and the lower end of the ratchet shaft 199 and creates an anti-frictional element for the top of the cup which may thus be pressed down forcibly without greatly affecting the friction exerted by the spring 205. It is the downward movement of the crosshead by reason of a standard ratchet construction that imparts rotation to the ratchet shaft 199 and to the securing head. This feature of operation and also details of the ratchet parts will now be further explained.

The ratchet shaft is formed with a helical groove 209 and a ratchet collar 210 surrounds the shaft and is formed with an internal thread section which projects into and operates within the groove 209 of the shaft. The collar is held against vertical movement relative to the boss 192 but is carried bodily up and down with the crosshead 122. It is confined within a housing unit 211 which is frictionally mounted within the boss 192.

The boss 192 is vertically apertured in a lower bore 212 and a larger upper counter-bore 213. This provides a seat for the ratchet unit and its housing unit 211. The housing unit comprises a bushing 214 formed with a head 215. Its central opening designated by the numeral 216 provides a loose bearing for the ratchet shaft 199.

A sleeve 217 is mounted on the lower end of the bushing and is held in place by a pin 218. In assembling the housing unit within the boss 192 the unit is inserted from above and the head 215 of the bushing 214 is seated against the shoulder formed at the junction of the two diameters of the bores 212, 213. The lower ends of the sleeve and the bushing extend down in the smaller or lower bore to a position just beyond the bottom of the boss 192.

The bushing 214 is counter-bored as at 219 to provide a pocket for the collar 210 and a locknut 220 is threaded into the lower end of the bushing and in its counter-bore. The enlarged head of this nut engages under and locks with the end of the sleeve 217 when the nut is screwed down tight against the bottom of the bushing 214. There is sufficient distance between the head 215 of the bushing and the outer edge of the head of the locknut where it extends beyond the bushing and sleeve and under the boss 192, to loosely confine the ratchet unit within the boss.

The ratchet collar 210, within the pocket of the housing unit 211, is free to turn in one direction only. The housing unit normally remains stationary within the boss 192 but can slip in its seat should undue strain be applied to cause its rotation. An abnormal locking of the ratchet unit may bring about such a condition. This housing unit, however, is frictionally held so that normally it will not rotate within its seat.

The boss 192 is formed with a hollow extension 222 in which is disposed the frictional elements to normally retain the housing in non-rotative position. These friction elements comprise a friction block 223 which carries a pin 224 having loose sliding fit within a plug 225 threaded in the end of the opening formed in the extension 222. The inner face of the friction block is curved to fit the cylindrical wall of the sleeve 217 and is urged against the sleeve by a spring 226 mounted on the pin 224 and bearing against the plug 225.

The bushing 214 is slotted along one side as at 227 and a latch element is disposed within the slot. Such an element may be of usual ratchet construction such as is found in ratchet screw drivers, ratchet drills, etc. This latch element prevents rotation of the collar 210 in one direction but permits it to rotate in the opposite direction. It is when the cross head 122 is being lowered and when the securing head 197 and its friction cup 195 is engaging the cap *d* of the can, that the latch element prevents turning of the collar.

Collar 210 is formed with spaced lugs or projections 228 and it is these projections which function to stop rotation of the collar in the wrong direction. A leaf spring 229 is located in the slot 227 of the bushing 214 and bears against the inner wall of the sleeve 217. This spring is secured to a vertically disposed locking plate 230 which is also located within the slot 227, and which is off-center from the collar 210.

Under the pressure of the spring 229, this locking plate 230 acts as a barrier for lug 228 on the collar when the latter starts to move in the reverse direction as when the securing head first engages the cap *d* of the can. This engagement takes place during the descent of the cross head 122 and at such time the internal thread formed on the collar traverses the helical groove 209 of the ratchet shaft 199, the collar 210 being held against rotation by the latch. The ratchet shaft rotates as a result and with it the friction head 197. This screws on the cap.

When the crosshead 122 returns on its upward stroke the friction head 197 disengages the can cap *d* and thereupon the collar 210 is free to rotate in a reverse direction. The spring pressed locking plate 230 is then ineffective as the spring 229 yields with the passing of each lug 228 of the rotating collar. This reverse rotation of the collar is the result of the ratchet shaft 199 moving down relative to the rising boss 192 and the walls of its helical groove 209 bear against and move along the internal thread of the collar.

The ratchet shaft 199 is so lowered while the crosshead is rising, under the action of a spring 235 which is seated on the top of the shaft. This spring and the upper end of the shaft are confined within a tubular housing 236 which is carried on the boss 192, the lower end of this housing seating within the upper or counter-bore 216 of the boss. A lock screw 237 threaded in the side of the boss engages the lower inserted end of the housing and holds it tightly in place.

A headed pin 241 extends into the upper section of the spring and an adjusting screw 242 threaded in the upper end of housing 236 permits a desired adjustment for the compression of the spring. This screw may be held in adjusted position by a suitable lock nut 243.

It will be understood that when the crosshead is descending and as the ratchet unit is moving down over the rotating but vertically held ratchet shaft 199, that the spring 235 is being compressed. This allows for a greater length of the shaft within the housing 236.

The next following two step movements of the turret 111 carry the fully assembled can, spout and cap through two idle stations. At such time no work is done on the can. The can is then brought to rest at the discharge station G and is ready to be ejected from the turret pocket.

A bell crank lever 251 (Figs. 1 and 3) is disposed to move in a horizontal plane over the table extension 31, a long arm 252 of the bell crank extending in between an upper and lower section of the turret 111. The bell crank lever is rocked on a vertically disposed stud 253 mounted on the table extension. It is yieldingly held down against the top of the table by a spring 254 which surrounds the stud above the bell crank. The spring is confined on top by a washer 255 held by a nut 256 threaded on the stud. This construction prevents undue swinging of the bell crank lever.

The long arm 252 of the bell crank lever is formed at its outer end into a can engaging pad 258 and when the can comes to rest at station G this pad is just inside of the can, this being the position shown in Fig. 1. Accordingly when the bell crank is rocked on its pivotal mounting 253, the pad engages the inner edge of the can and sweeps it out of the turret pocket landing the can on the discharge table H.

The bell crank lever 251 is also formed with a short arm 261 and its timed rocking movement is effected by a suitable connection with a cam actuated discharge slide 262 (Figs. 1, 2 and 3) which is also used to engage a can *a* after it has been removed from the turret pocket and to align and advance the cans through the discharge table H. This connection between the bell crank lever arm and the slide is made through the medium of a link 263.

One end of the link 263 is pivotally mounted on a pin 264 carried by the slide and its other end, which is slotted at 265, passes over a pin 266 held in the forked end of the short arm 261. The movement of the discharge slide 262 is in excess of that needed to rock the bell crank lever for its discharge stroke and this extra movement is taken up by the slotted end of the link 263 moving on its pin 266. This slack connection serves another purpose. It permits the forward end of the slide 262 to move back out of alignment with the turret pocket before the can is ejected onto the discharge table by actuation of the bell crank lever 251.

The discharge slide 262 is cam actuated by spaced guide blocks 267 (Fig. 3) formed as integral parts of the table extension 31 between which the slide moves. Slide gibs 268 bolted on top of the blocks and overhanging the slide prevent upward dislocation.

The slide is cam actuated in the following manner. A depending lug 271 (Figs. 2 and 3) projects down from the under surface of the slide and extends through a slotted opening 272 cut through the table extension 31. The lug is pivotally connected at 273 to one end of an adjustable connecting rod 274. Rod 274 at its other end is pivotally connected to the upper end of a lever arm 275 (see also Fig. 8) which is keyed to one end of a horizontal rock shaft 276.

This rock shaft is journaled in an elongated boss which may be an integral part of the table extension 31. An arm 278 is also keyed to the rock shaft 276 at its other end. The free end of this arm carries a pin 279 on which rotates a cam roller 281. This cam roller operates in a cam groove 282 formed in the peripheral surface of a barrel cam 284 which is mounted upon and which is driven by the lower drive shaft 16.

Referring again to Fig. 1 which shows the slide 262 ready to be moved back, it will be observed that the completely assembled can *a* is in its turret pocket ready for discharge onto the table H. As the discharge slide moves back, a forward can engaging head 286 of the slide, first moves back and out of alignment with the turret pocket. This is while the slack movement between pin 266 and the slide slot 265 is taking place. During the last part of the slide stroke, however, the bell crank is actuated and the can is moved out of the turret pocket and in front of the head 286.

When the slide 262 returns on its next forward stroke, its head engages the newly discharged can and pushes the can along the table H and in between a pair of spaced L-shaped guide rails 288 (Figs. 1 and 8) mounted on the table extension 31. These rails keep the cans in processional order on the discharge table H and each discharged can coming into the row pushes the cans ahead on the forward stroke of the slide. A single or a number of cans may be taken off from the end of the line as desired or the forward end of the row may extend on into another machine.

It is thought that the invention and many of its attendant advantages will be understood from the foregoing description, and it will be apparent that various changes may be made in the form, construction and arrangement of the parts without departing from the spirit and scope of the invention or sacrificing all of its material advantages, the form hereinbefore described being merely a preferred embodiment thereof.

I claim:

1. In a machine for assembling soft metal spouts to cup-shaped neck portions of containers in leak-proof joints, the combination of means for progressively conveying the containers and spouts in loosely assembled relation to a plurality of spaced operating stations, means for successively advancing the containers and spouts while in such loosely assembled relation into said conveying means, and devices at one of said stations and cooperating with said conveying means for successively engaging and operating on said cup-shaped neck portions of the containers and adjacent portions of the spouts seated therein and which enter into the joint, by simultaneously bending the walls of said neck portions inwardly over the base of said spouts while reshaping and flowing the soft metal of the spout bases to securely interlock such joint portions.

2. A machine for securing a spout to a container having a cup-shaped neck portion, comprising in combination, means for advancing a preformed spout and said container into a predetermined position so that the base of the spout is disposed within said neck portion of the container, and joint forming devices cooperating with said advancing means for engaging and bending inwardly the wall of said positioned cup-shaped neck portion and simultaneously compressing and reshaping the included base of said spout to provide a leak-proof joint.

3. In a machine for securing in a leak-proof joint a preformed spout to a container having an open cup-shaped nozzle portion, the combination of means for advancing said container and spout along a predetermined path of travel, means cooperating with said advancing means for engaging and aligning the spout within said cup-shaped nozzle portion of the container, and joint-forming devices also cooperating with said advancing means for engaging and bending inwardly the peripheral wall of said cup-shaped nozzle portion and simultaneously compressing and reshaping the engaged portion of the spout to provide a tight-fitting leak-proof joint.

4. In a machine for assembling spouts to containers in leak-proof joints, the combination of a turret member having peripheral pockets thereon and provided with means for intermittently rotating the same, means for successively feeding containers with loosely assembled spouts thereon into the pockets of said turret while the latter is stationary, means cooperating with and disposed adjacent said turret for aligning and centering the container and spout relative to one another in preparation for final assembly and while the turret is stationary, and means cooperating with and disposed adjacent said turret member for engaging said container and spout for squeezing and deforming the same into tight fitting interlocking engagement.

5. A machine for uniting in leak-proof joints preformed spouts to containers having open cup-shaped neck portions, comprising in combination: a turret member having peripheral pockets thereon and provided with means for intermittently rotating the same, means for successively feeding said containers with the spouts loosely seated therein into pockets of said turret while the latter is stationary, means cooperating with and disposed adjacent said turret for aligning and centering the spout relative to said container in preparation for final assembly, means cooperating with and disposed adjacent said turret for engaging and squeezing the peripheral wall of said container cup neck and the base of said centered spout into tight-fitting interlocking engagement, and means disposed adjacent and cooperating with said turret for ejecting the spouted containers from the machine.

6. In a machine for securing a preformed spout to a nozzle container in a leak-proof joint, the combination of means for advancing the parts to be secured to a plurality of operating stations, means for feeding loosely assembled spouts and containers in processional order to said conveying means, an escapement device for admitting the containers with their spouts one at a time into said conveying means, a testing head cooperating with said conveying means for detecting an interruption in the continuous flow of containers and for stopping the machine at each interruption, and joint forming devices disposed at one of said stations for engaging and for bending inwardly a nozzle part of said container and for simultaneously compressing and reshaping the base parts of the spout within such nozzle part to form a tight fitting interlocked joint.

7. In a machine for securing loosely assembled containers, spouts and caps in leak-tight sealed condition, the combination of a carrier member, means for advancing said carrier member to a plurality of operating stations, means for feeding the loosely assembled container parts one assembly at a time to a detecting station adjacent said carrier member, means for aligning and centering the container parts while engaged by said carrier member at one of said stations, devices effective at a second operating station for engaging and bending inwardly a part of the container over the spout while held by said carrier member and for simultaneously compressing and reshaping the enclosed part of the spout to provide a tight fitting joint, and a cap applying member operative at another operating station for sealing a cap on the spout in a second tight fitting joint while said container is held by said carrier member, the said operations providing a spouted container fully sealed.

8. In a machine for securing loosely assembled containers, spouts and caps in leak-tight sealed condition, the combination of a carrier member, means for advancing said carrier member to a plurality of operating stations, means for progressively feeding the loosely assembled container parts to said carrier member, an escapement device for releasing one assembly at a time for their reception by said carrier member, a testing head cooperating with and disposed adjacent said carrier member for detecting an interruption of container feed to said carrier member and thereby operative to stop further feeding when such interruption occurs, means disposed at one of said stations for aligning the container parts, devices located at another of said stations for engaging and bending inwardly a part of the container over the spout while simultaneously compressing and reshaping the enclosed base of the spout to provide a leak-proof joint between container and spout, a cap applying member at another of said stations and cooperating with said carrier member for sealing the loosely applied cap on the spout in a threaded connection to provide a leak-proof joint between spout and cap, and means located at a still further operating station for ejecting the sealed container from said carrier member.

9. In a machine for securing loosely assembled containers, spouts and screw caps in leak-tight sealed condition, the combination of means for successively advancing and presenting such container parts one assembly at a time to a series of spaced operating stations, means at one of said stations for aligning and centering the container parts to be secured while held by said advancing means, devices at another of said stations and including squeezing jaws for engaging and bending inwardly a part of the container over the base of the spout while held by said advancing means and for supporting the adjacent container part while simultaneously compressing and reshaping the enclosed base of the spout in a tight fitting joint, a cap applying member at another of said stations and including a ratchet instrumentality for engaging and rotating said screw cap on the spout in a second tight fitting joint while the container is held by said advancing means, whereby the loosely assembled container parts are converted into a spouted container fully sealed, and means at a still further station for ejecting the sealed container from said advancing means.

10. In a machine for securing loosely assembled relatively soft metal spouts to metal containers in sealed leak-proof joints, the combination of means for progressively feeding the assembled parts to a rotatable turret, means for intermittently rotating said turret to successively advance the assembled parts to a plurality of operating stations, means at one station and cooperating with said turret and including a hollow member for moving down over a said spout for engaging and centering it with the vertical axis of its container, and means at another station and cooperating with said turret for engaging and bending inwardly a part of the container while supporting the part against collapse and while simultaneously compressing and reshaping the base of the spout included therein, said compressing action causing the soft metal of the spout to flow into tight fitting interlocking engagement with the rebent container wall forming a leak-proof joint and providing a container having a spout permanently sealed therein.

11. In a machine for securing loosely assembled containers and spouts in leak-proof tightly sealed joints at a plurality of spaced operating stations, the combination of a rotatable turret member having spaced pockets therein and provided with means for rotating the same, means for successively feeding the loosely assembled containers and spouts into said turret pockets in processional order, means at one operating station and cooperating with said turret for detecting the presence of two adjacent containers and operative when one or both containers are absent to stop the machine operations, devices at another operating station and cooperating with said rotating turret for engaging and bending inwardly a part of the container and for pressing the bent part over the enclosed base of the spout while simultaneously compressing and reshaping the spout base to provide a leak-proof joint, said bending devices including a pair of squeezer jaws having gripping surfaces for engaging under the container part adjacent the spout base and for supporting the same against collapse, said bending devices also including a movable wedge member which cooperates with said squeezer jaws to reshape both container part and spout base into an interlocking leak-proof joint.

JOHN M. HOTHERSALL.