April 21, 1970 E. L. HOOVER 3,508,001

ELECTRIC RETRIEVAL SYSTEM

Filed June 24, 1966

5 Sheets-Sheet 1

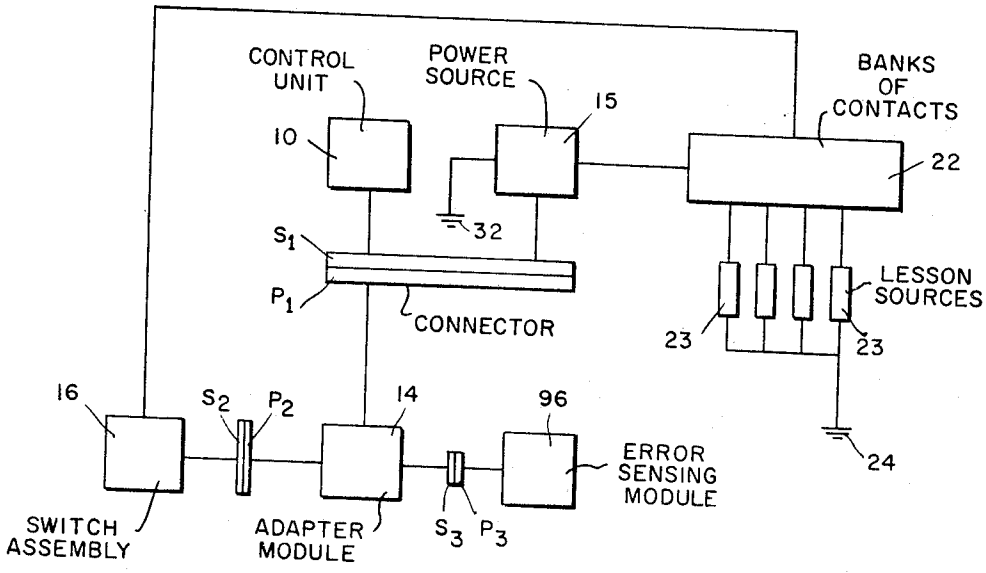


Fig. 1

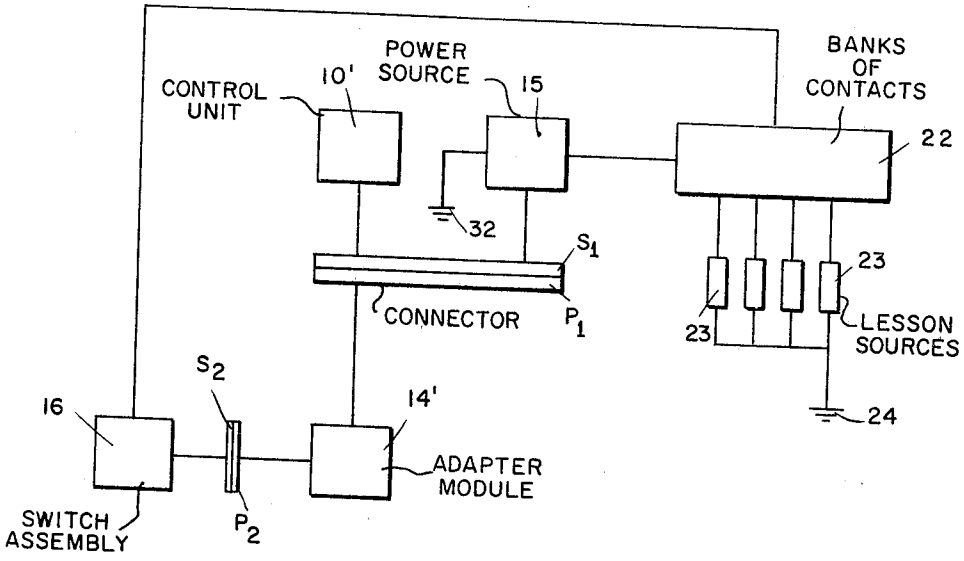


Fig. 4

INVENTOR.
EDWIN L. HOOVER

BY

Townsend, Jenkins & Hanley

ATTORNEYS

ELECTRIC RETRIEVAL SYSTEM

Filed June 24, 1966 5 Sheets-Sheet 2

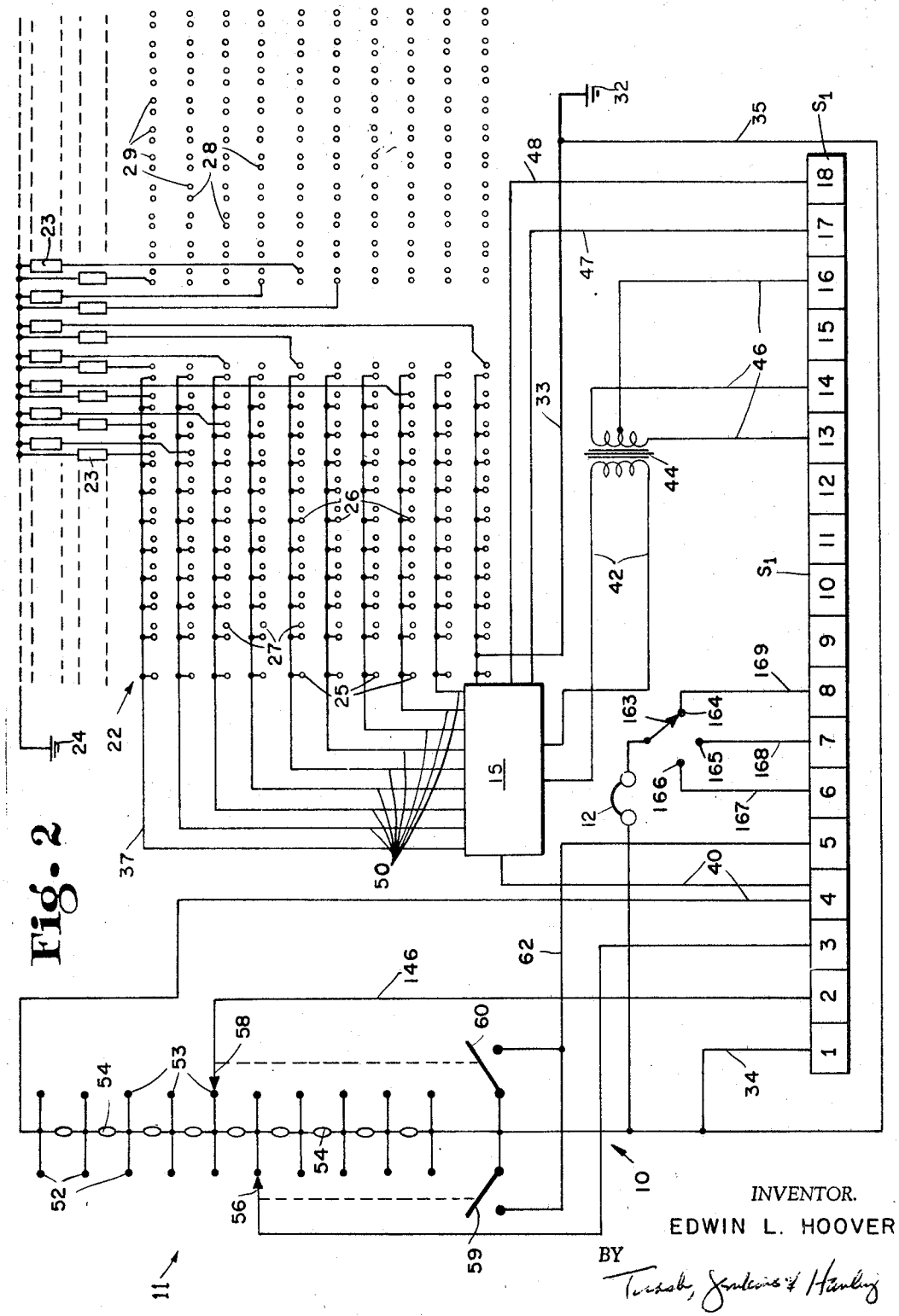


Fig. 2

INVENTOR.
EDWIN L. HOOVER

BY Turnbull, Jenkins & Hanley
ATTORNEYS

April 21, 1970 E. L. HOOVER 3,508,001

ELECTRIC RETRIEVAL SYSTEM

Filed June 24, 1966 5 Sheets-Sheet 3

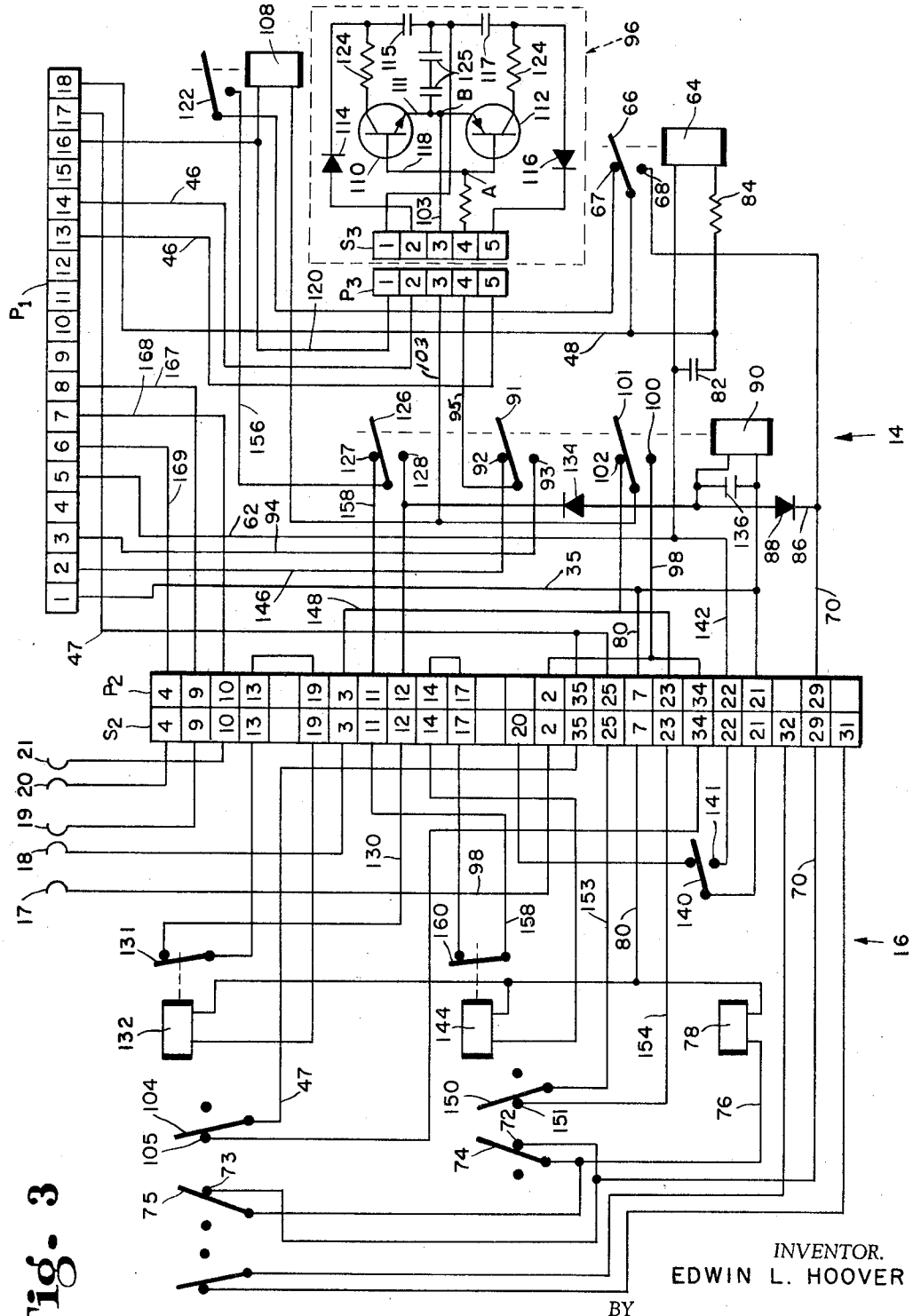

Fig. 3

INVENTOR.
EDWIN L. HOOVER
BY
Trask, Jenkins & Hanley
ATTORNEYS

April 21, 1970 E. L. HOOVER 3,508,001

ELECTRIC RETRIEVAL SYSTEM

Filed June 24, 1966 5 Sheets-Sheet 4

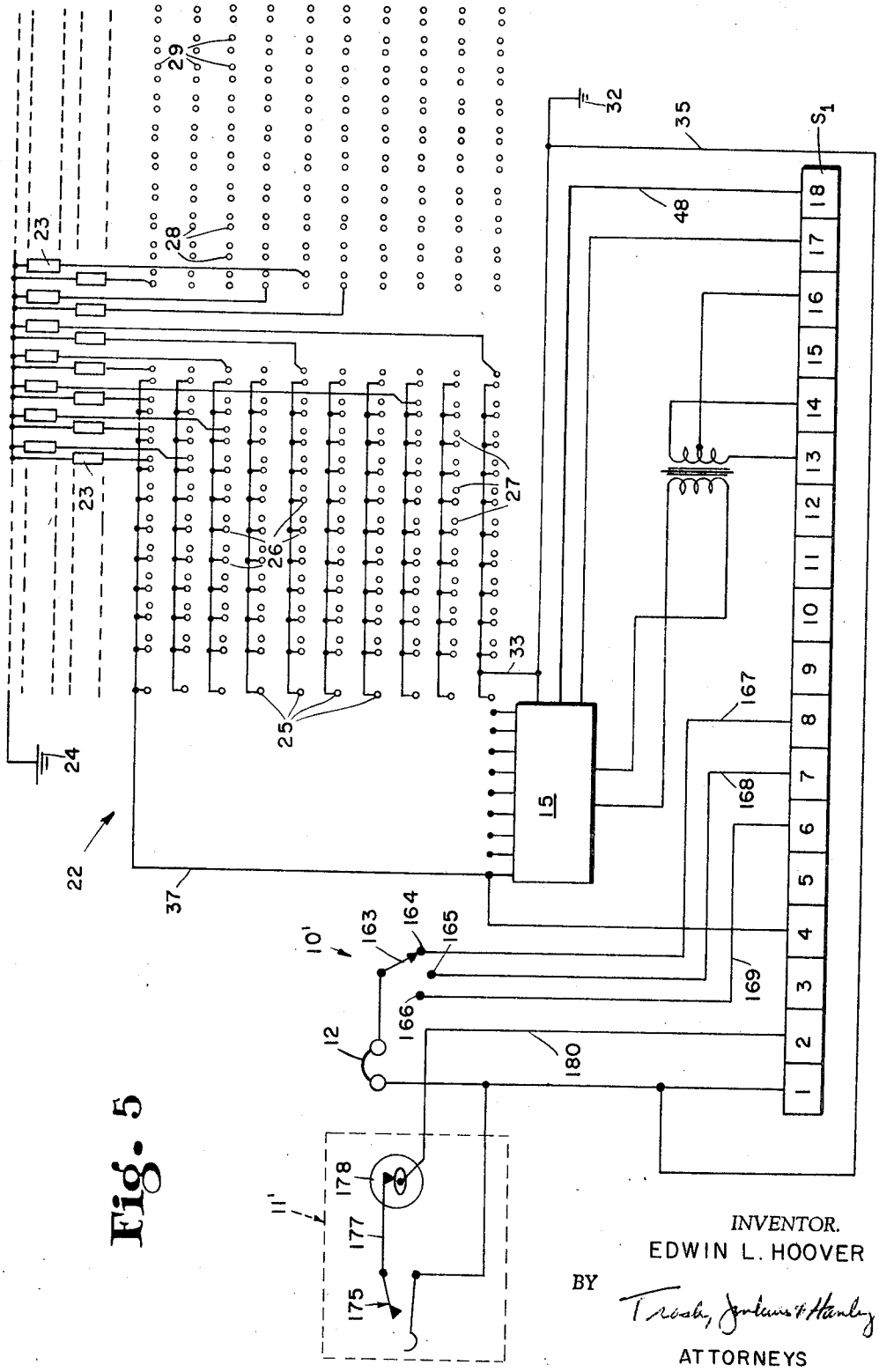


Fig. 5

INVENTOR.
EDWIN L. HOOVER

BY Trosby, Jenkins & Hanley

ATTORNEYS

April 21, 1970 E. L. HOOVER 3,508,001

ELECTRIC RETRIEVAL SYSTEM

Filed June 24, 1966 5 Sheets-Sheet 5

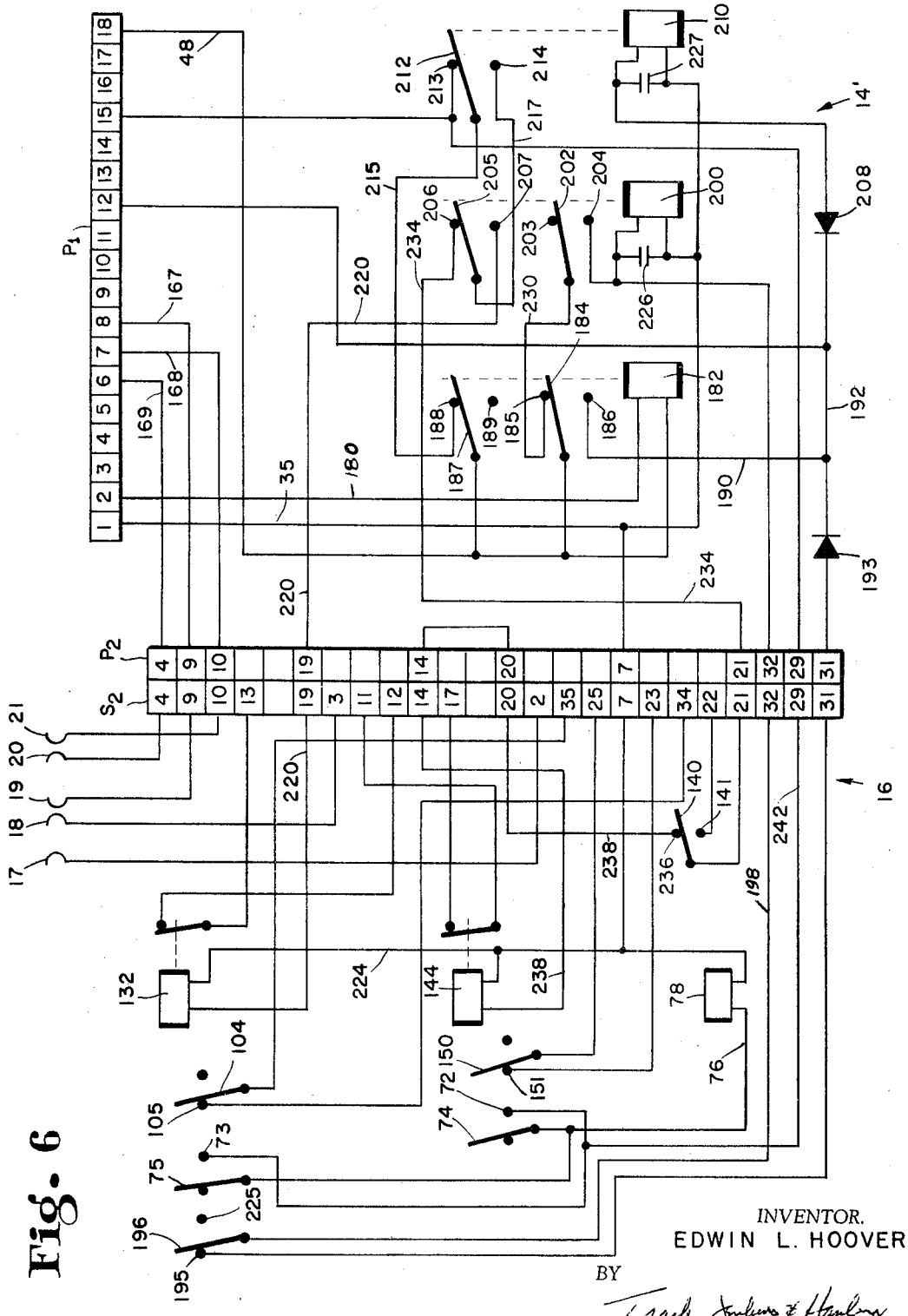


Fig. 6

INVENTOR.
EDWIN L. HOOVER

BY

Tracy, Julian & Hamburg

ATTORNEYS

United States Patent Office 3,508,001
Patented Apr. 21, 1970



3,508,001

# ELECTRIC RETRIEVAL SYSTEM

Edwin L. Hoover, Lafayette, Ind., assignor to P & H Electronics, Lafayette, Ind., a partnership

Filed June 24, 1966, Ser. No. 560,238
Int. Cl. H04r 3/00
U.S. Cl. 179—1 4 Claims

## ABSTRACT OF THE DISCLOSURE

An electric system having a group of listening stations for selecting messages from a remotely positioned plurality of message sources. For each listening station there is a bank of contacts arranged in rows and columns and connected to the various message sources which are swept by a set of wipers coupled to a loud speaker. The wipers form a part of a two-motion switching assembly which is controlled by a module connected to a selector switch at the listening station. Selection of a particular message is initiated by operating the selector switch at the listening station to furnish two signals to the module which controls the two directions of motion of the wipers on the bank of contacts. Apparatus is disclosed wherein the selector switch may be interchangeably replaced by either a dial switch, which furnishes a train of pulses, or a switch which supplies a pair of DC voltages corresponding in amplitude to the coordinates of the chosen location on the bank of contacts. In the case of a dial switch the first train of pulses moves the wipers in one direction while the second train of pulses moves said wipers in the other direction of movement on the bank of contacts. Where a switch is used for supplying DC voltages, said voltages are compared with DC voltages on a second set of contacts forming a part of said bank of contacts until a null condition results between the contact voltages at the wipers and the DC voltages from the selector switch. The number of listening stations can be multiplied by simply connecting additional banks of contacts and their associated circuitry to the message sources.

This invention relates to an electric message retrieval system wherein an audible message can be selectively actuated and transmitted to a location remote from the source of said message.

It is an object of this invention to provide such a retrieval system in which an individual can from a remote location selectively actuate and receive an audible message, which will permit such selection from a plurality of messages, which will permit such selection to be quickly and easily effected, which will permit changes in the selection during transmission of the message, which can be actuated by a plurality of different modes, and which will permit a plurality of individuals to select and receive the desired messages.

The instant invention is adapted to permit a plurality of individuals at positions remote from each other to selectively actuate and receive messages in audible form from a bank of such messages which can be located at a point remote from each of the individuals. For example, it may be employed as a teaching aid wherein a plurality of students can each selectively actuate and receive a pre-recorded lesson from a bank of such lessons. It may also be used, for example, by a plurality of subscribers in an office building to permite each of said subscribers to selectively actuate and receive musical recordings in his respective office. For ease of description, however, the invention will be described herein as being used by a plurality of students to permit each of said students to select and receive pre-recorded lessons. It is to be understood, of course, that the circuitry and the method of operation



can remain the same irrespective of the use made of the invention.

In accordance with the invention, each student location is provided with a control unit. Said unit is provided with switch means for selectively actuating the desired lesson and with audio receiving means, conveniently in the form of headphones, for receiving the transmitted lessons. The switch means in the control unit is electrically connected to an adapter module which, upon selective actuation of the switch means, controls the operation of a two-motion switch assembly. The lessons are connected to contacts in the two-motion switch assembly and through said assembly to the headphones at the student location. Thus, selective actuation of the switch means at the student location causes the adapter module to close the desired contacts in the two-motion switch assembly to actuate the desired lesson for transmission to the student location.

The adapter module and the two-motion switch assembly are connected to a power source for supplying electrical power to the various components of the system. Desirably, a plurality of different types of switch means can be employed in the control unit and only the adapter module need be changed in the system in order to accommodate the use of such different types of switch means at the student location.

Other objects and features of the invention will become apparent from the more detailed description which follows and from the accompanying drawings, in which:

FIG. 1 is a schematic diagram showing a message retrieval system embodying my invention;

FIG. 2 is a wiring diagram of the student control unit, power supply, and contact banks shown in FIG. 1;

FIG. 3 is a wiring diagram of the adapter module and switching assembly shown in FIG. 1;

FIG. 4 is a schematic diagram showing a modified embodiment of a message retrieval system embodying my invention;

FIG. 5 is a wiring diagram of the student control unit, power supply, and contact banks shown in FIG. 4; and

FIG. 6 is a wiring diagram of the adapter module and switching assembly shown in FIG. 4.

In the system illustrated in FIGS. 1–3, the student control unit **10** comprising a digital selector switch **11** and headphones **12** is connected through plug $P_1$ and socket $S_1$ to an adapter module **14**. Each student module **14** is connected to a common power source **15** through plug $P_1$ and socket $S_1$ and through plug $P_2$ and socket $S_2$ to a two-motion switch assembly **16** having a plurality of wipers **17**, **18**, **19**, **20**, and **21** selectively engageable with banks of contacts **22**, the contacts in said banks of contacts engageable with the indexing wipers **17** and **18** also being connected to said power source. In the illustrated single wire system, each of the lessons **23** is connected to ground, as at **24**, and to one of the contacts in the contact banks **22**. One side of the headphones **12** is connected to ground, and the other side of said headphones is connected by means of audio-transmitting wipers **19–21** through certain of the contacts in contact banks **22** to the lessons **23** to thus complete the circuit from said lessons to the headphones upon actuation of the selector switch **11**, said lessons having their own power source. Normally, the power source **15**, switch assemblies **16** and their associated contact banks **22** are located at positions remote from the student locations.

As shown in FIG. 2, the contact banks **22** comprise one bank of ten contacts **25** adapted to cooperate with wiper **17** to index wipers **17–21** in a decade direction and one bank of ten contacts **26** adapted to cooperate with wiper **18** to index wipers **18–21** in a units direction. Said contact banks also contain ten banks of ten contacts **27** adapted to cooperate with wiper **19**, ten banks of ten contacts **28** adapted to cooperate with wiper **20**, and ten

banks of ten contacts 29 adapted to cooperate with wiper 21. Each of the contacts 27, 28, and 29 is connected to one of the lessons 23 to thus permit a total of 300 different lessons to be connected to the system.

As shown, the power supply 15 is connected to ground at 32 to thus ground the first contact 25 in the bank of contacts 25 and the first contact 26 in the bank of contacts 26 by means of line 33. Switch 11 is connected to ground 32 through lines 34 and 35. Said power supply also supplies, through line 37, a fixed reference voltage to the tenth contact 25 in the bank of contacts 25 and the tenth contact 26 in the bank of contacts 26. In a like manner, said reference voltage is supplied to the control switch 11 through line 40. A pair of AC current carrying lines 42 extend from the power supply to feed one side of a transformer 44 with lines 46 extending from the opposite side of said transformer to the adapter module 14. The necessary DC voltage to operate the various solenoids and relays in the adapter module 14 and switch assembly 16 is supplied to said module and assembly from the power supply through line 48.

With the first contact in each of the contact banks 25 and 26 connected to ground 32 through line 33 and the tenth contact in the banks 25 and 26 connected by line 37 to the reference voltage of the power supply, a voltage drop is provided across the contact banks 22. Each of the intervening contacts 25 and 26 is also connected by a line 50 to a reference voltage in the power supply. The voltage is graduated between lines 33, adjacent lines 50, and line 37 in equal increments so that there is an equal potential difference between adjacent contacts 25 and adjacent contacts 26. In a similar manner, the control unit switch 11 has ten pairs of contacts 52 and 53. A plurality of impedances 54 are wired in series between the adjacent pairs of contacts 52 and 53 and provide an equal voltage drop between adjacent pairs of said contacts so that the incremental voltage drop across the control unit switch 11 corresponds to the incremental voltage drop across the contacts 25 and 26 in the banks of contacts 22.

To select one of the lessons 23, the student moves switch 56 along the control unit contacts 52 until it closes against the contact 52 corresponding to the first digit in the lesson which he desires. He also moves switch 58 along contacts 53 until it closes against the contact 53 corresponding to the second digit of the lesson which he desires. Conveniently, movement of switches 56 and 58 can be effected by hand wheels, control knobs, or the like. Moving switches 56 and 58 into the desired position momentarily closes control unit switches 59 and/or 60 which are connected by line 62 to one side of relay 64 in adapter module 14, the opposite side of said relay being connected by line 48 to the power supply 15.

Energization of relay 64 moves switch blade 66 from contact 67 to contact 68 to supply DC power through line 70 to contacts 72 and 73 in assembly 16. Blades 74 and 75 closed against contacts 72 and 73 transmit said power through line 76 to one side of reset coil 78, the opposite side of said coil being connected to ground 32 through lines 80 and 35. Actuation of reset coil 78 causes means (not shown) to move wipers 17–21 to their home position out of engagement with any of the contacts 25–29 in the contact banks 22. With the momentary closing of switches 59 and/or 60, capacitor 82 and resistance 84 in the adapter module 14 will cause relay 64 to remain energized for a time sufficient to permit coil 78 to return wipers 17–21 to home position. This time delay further prevents the switch assembly from being actuated to move wipers 17–21 while switches 56 and 58 are being closed against the desired contacts 52 and 53 since the wiper movement cannot be effected until relay 64 is deenergized.

With relay 64 closing blade 66 against contact 68, DC current will also be supplied through line 86 and diode 88 to relay 90. This energizes relay 90 to move switch blade 91 from contact 92 to contact 93 to thus connect control unit switch 56 through lines 94 and 95 to the error sensing module 96 of adapter module 14 for transmitting the electrical unbalance of the control unit 11 to module 96, modules 14 and 96 being interconnected through plug $P_3$ and socket $S_3$. The reference potential in the contact banks 22 is picked up by wiper 17 engaging one of the contacts 25 and is transmitted through line 98 to contact 100. Switch blade 101 will have moved from contact 102 to contact 100 upon actuation of relay 90 so that the reference potential from wiper 17 is transmitted through switch blade 100 and line 103 to module 96.

Since wiper 17 would not be closed against any one of the contacts 25 at the beginning of the switching operation, it is necessary to provide a voltage unbalance in the home position. This is accomplished by switch blade 104 and its contact 105 in the switch assembly 16 which are connected through a branch of line 98, switch blade 101 and its contact 100, and line 103 to module 96 and through line 47 to the power supply; line 47 providing an unbalance voltage from the power supply. As long as an electrical unbalance exists between wiper 17 or switch blade 104 and the control unit switch 56, relay 108 in the adapter module 14 will be energized by action of the error sensing module 96.

As shown in FIG. 3, the module 96, which senses the unbalance between the switches in the student control unit 10 and the switch assembly 16 and contact bank 25, contains an NPN transistor 110 having its emitter connected by line 111 to the emitter of a PNP transmitter 112, the line 111 being connected to line 103. A pair of the lines 46 leading from the transformer 44 are connected to the module 96 and supply a positive potential to the collector of transistor 110 through diode 114 and filter capacitor 115 and a negative potential to the collector of transistor 112 through diode 116 and filter capacitor 117. The bases of the transistors are interconnected by line 118, and line 95 is connected to line 118 so that the unbalanced voltage is applied to the module at point A from line 95 and at point B from line 103. The voltage on line 95 (with switch blade 91 closed against contact 93) is a function of the positioning of the switch 56 along contacts 52, and the voltage at point B is a function of the voltage on wiper 17 or switch blade 104. When point A is positive with respect to point B, transistor 110 will be rendered conductive to permit current to flow outwardly through line 103 to relay 108 and return through line 120 to the center tap of transformer 44 to energize relay 108 for keeping its switch 122 closed so that wiper 17 will continue to advance along contacts 25 in the contact banks 22 until a balanced condition is reached. Conversely, when point A is negative with respect to point B, transistor 112 will be conductive to render relay 108 energized until wiper 17 advances along contacts 25 to reach a balanced condition. Desirably, current limiting resistors 124 are interposed between the collectors of transistors 110 and 112 and the take-off of transformer 44, and capacitors 125 are interposed between emitters of said transistors and the transformer to prevent chatter of relay 108 as wiper 17 moves from one contact 25 to another.

DC current from line 48 is free to flow to switch 122 by reason of relay 64 becoming de-energized after student selection and discharge of capacitor 82 so that said current can flow through switch blade 66 and contact 67 to switch 122. As long as an unbalance exists between wiper 17 or switch blade 104 and the control unit switch 56, relay 108 will retain switch 122 closed to cause DC current to flow to switch blade 126 which was moved from contact 127 to contact 128 upon energization of relay 90. The current flows from contact 128 through line 130 to the interrupter contacts 131 for energizing decade solenoid 132. The interrupter contacts 131 create a pulsation of the energization of solenoid 132 to cause wipers

17–21 to automatically step in a decade direction in contact banks 22 by means not shown. In such advancement, wiper 17 steps from one contact 25 to another and wipers 18–21 will step along the rows of contacts 26–29 in a left-right direction. The wiper 17 will continue to step along the contacts 25 until no unbalance exists. During the stepping operation of wiper 17, relay 90 is held in by the action of diode 134 and capacitor 136 to permit wiper stepping to continue until a balanced condition is reached.

If wiper 17 reaches the end of its travel before a balanced condition has been reached, means (not shown) cause limit switch 140 in switch assembly 16 to move against contact 141 to pull in relay 64 through line 142 and thus return wipers 17–21 to their home position to start a recycle of their movements in the decade direction. After a balanced condition has been reached, that is, the potential between switch 56 and ground being equal to the potential between the contact 25 engaged by wiper 17 and ground, module 96 or longer conducts and relay 108 is deenergized to break the circuit to solenoid 132 with the consequent deenergization of relay 90.

Deenergization of relay 90 causes the error sensing module 96 to be connected to the units section of the control switch 11 and to the reference potential contacts 26 and further causes switch 122 of relay 108 to be connected to a units solenoid 144 in switch assembly 16 to cause wipers 18–21 to close against the selected contacts 26–29. The units error potential from switch 58 in control switch 11 is connected by line 146 through contact 92 (closed against switch blade 91) to line leading to the module 96. The reference potential in the contact banks 22 is picked up by the units position wiper 18 and is transmitted through line 148 to contact 102 (closed against switch blade 101) to line 103 connected to module 96. Since wiper 18 would not be closed against any one of the contacts 26 at the beginning of this switching operation, the unbalanced condition to start the stepping operation is provided by the switch blade 150 closed against its contact 151. The blade 150 is connected by line 153 to the unbalanced voltage line 47 from the power supply. Contact 151 is connected by line 154 to contact 102 (closed against switch blade 101) and thus to line 103 leading to the error sensing module 96. As long as an electrical unbalance exists between wiper 18 or switch 150–151 and the switch 58 in the student control switch 11, the module 96 will energize relay 108 for closing switch 122 in the manner previously described. With switch 122 closed and switch blade 66 closed against contact 67, current will flow from the power supply 15 through the line 48 through switch blade 66 and its contact 67 to switch 122, and then through line 156 to switch blade 126 closed against its contact 127. Said current then flows through line 158 and interrupter contacts 160 in the switch assembly 16 for energizing the units solenoid 144. Energization of the solenoid 144 causes means (not shown) to advance wipers 18–21 in a units direction inwardly into the contact banks 22. The interrupter contacts 160 create a pulsation of the energization of the solenoid 144 to cause said wipers to automatically step in this units direction. Such stepping will continue with the wiper 18 moving along contacts 26 until no unbalance exists.

If wiper 18 reaches the end of its travel before a balanced condition is reached, means (not shown) cause limit switch 140 to close against contact 141 in switch assembly 16 to thus pull in relay 64 through line 142 in the manner previously described and thus return wipers 17–21 to the home position so that wiper 17 will again start to seek a balanced condition in the manner previously described. After a balanced condition has been reached, that is, the potential between switch 58 and ground being equal to the potential between the contact 26 engaged by wiper 18 and ground, relay 108 opens to break the circuit to the units solenoid 144.

With the unit in its balanced condition, contacts 19–21 will be closed against the selected contacts 27–29, respectively, in contact banks 22. As shown in FIG. 2, the student control unit 10 is provided with a switch 163 connected to headphones 12 and selectively closable against contacts 164, 165, and 166. Said contacts are connected by lines 167, 168, and 169 to wipers 19–21, respectively. Thus, the switch 163 permits the student to select which of the contacts 19–21 will be connected back through the headphones for selecting the desired lesson 23.

The embodiment of my invention illustrated in FIGS. 4–6 shows how my invention can be employed with a dial type selector switch at the student location instead of the digital selector shown in FIG. 2. In this embodiment, the student control unit 10′ comprises a dial selector switch 11′ and headphones 12 connected to an adapter module 14′ through plug $P_1$ and socket $S_1$. Said module is connected through the plug and socket $P_1$ and $S_1$ to the power source 15 and through the plug and socket $P_2$ and $S_2$ to the two-motion switch assembly 16 having the plurality of wipers 17–21 selectively engageable with the banks of contacts 22, with the contacts 25 and 26 in said banks of contacts engageable with wipers 17 and 18 also being connected to the power source 15. As previously described, the contact banks 22 comprise one bank of ten contacts 25 in the decade direction and one bank of ten contacts 26 in the unit direction, with additional banks of unit contacts 27, 28, and 29. As with the previously described embodiment, each of the lessons 23 is connected to ground, as at 24, and to one of the contacts 27, 28 or 29.

As shown in FIG. 5, the power supply 15, which may be the same power supply shown in FIG. 2, but with some of its components not employed, is connected to ground at 32, with the contact banks 22 being connected to said ground through line 33. One side of the headphones 12 is also connected by line 35 to ground 32. The opposite side of said headphones is connected to the switch 163 selectively closable against contacts 164, 165, and 166 connected by lines 167, 168, and 169 to wipers 19–21, respectively. Power supply 15 is also connected by line 37 to the bank of contacts 22 and to the module 14′ by the DC power line 48, line 48 supplying the necessary voltage to operate the various solenoids and relays in the adapter module 14′ and switch assembly 16. Since this embodiment of the invention does not employ the error sensing module 96, it is, of course, not necessary for the power supply 15 to supply the various reference voltages to the contact banks 22.

As shown in FIG. 5, the control unit 10′ comprises a switch 175 having one of its sides connected by the ground line 35 to ground 32 and its opposite side connected by line 177 to dial switch 178. Said dial switch is connected by line 180 to one side of a relay 182, the opposite side of said relay being connected to line 48 leading from the power supply. Thus, with switch 175 open, relay 182 will be deenergized. Upon closing switch 175, the circuit to relay 182 will be closed to thus energize said relay for moving contact blade 184 from its contact 185 to contact 186 and moving switch blade 187 from its contact 188 to contact 189. With blade 184 closed against contact 186, the power from line 48 is transmitted through lines 190 and 192 and through diode 193 to contact 195 and blade 196 in the switch assembly 16. Blade 196 is connected by line 198 back to one side of relay 200 in module 14′, the opposite side of said relay being connected by line 35 to ground 32. Energization of relay 200 causes switch blade 202 to move from its contact 203 to contact 204 and switch blade 205 to move from its contact 206 to contact 207.

Energization of relay 182 further causes power from line 48 to be fed through switch blade 184 and contact 186 to line 190 for transmission through line 192 and diode 208 to one side of relay 210, the opposite side of said relay being connected by line 35 to ground 32. Energization of relay 210 causes switch blade 212 to move from its contact 213 to contact 214.

When the student dials the first digit of the lesson number to be selected on dial switch **178**, the train of pulses from said switch transmitted to relay **182** and said relay will follow said train of pulses. With relay **182** following the train of pulses, switch blade **187** will open and close against contact **188** to transmit said pulses through line **215** to switch blade **212** and contact **214**. Contact **214** is connected by line **217** to switch blade **205** closed against contact **207**. Contact **207** is connected by line **220** to one side of the decade solenoid **132**, the opposite side of said solenoid being connected by line **224** to line **35** leading to ground **32**. The pulses transmitted to solenoid **132** cause it to be energized and deenergized in response to said pulses to cause means (not shown) to advance wipers **17–21** in a decade position in the contact banks **18** in accordance with the number of pulses dialed. In such advancement, wiper **17** steps from one contact **25** to another and wipers **18–21** step along the banks of contacts **26–29** in a left-right direction.

When the wipers **17–21** move off their home positions, blade **196** in switch assembly **16** will move from contact **195** to contact **225** thus breaking the power supply circuit to relay **200**. However, capacitor **226** wired across relay **200** will hold said relay energized to retain blade **205** against contact **207** during the pulsing. Capacitor **226** is kept charged during the first train of pulses by switch blade **184** closing against contact **185** so that power from line **48** is transmitted through blade **184** and contact **185** to line **230** leading to blade **202** closed against contact **204** which is connected to relay **200**. As soon as the first train of pulses is completed, relay **200** will be deenergized, thus permitting switch blades **202** and **205** to close against contacts **203** and **206**. Relay **210** will be held energized to keep blade **212** closed against contact **214** during the train of pulses by capacitor **227**. Capacitor **227** is kept charged by blade **184** pulsing closed against contact **186** so that power from line **48** is transmitted to said capacitor through lines **190** and **192** and diode **208**.

When the second train of pulses is dialed on dial switch **178**, said pulses are again transmitted through line **180** to deenergize relay **182** in response to said pulses. As said relay is energized in response to the pulses dialed, blade **187** will open and close against contact **188** so that said pulses are transmitted through line **215** to blade **212** and contact **214** and thus to blade **205** through line **217**. Because relay **200** is deenergized during the second train of pulses as consequence of blade **196** closing against contact **225** in the swiching assembly **16**, blade **205** will be retained closed against contact **206** during the second train of pulses. The pulses transmitted to contact **206** during the second train of pulses. The pulses transmitted to contact **206** are transmitted through line **234** to the limit switch **140** in the switching assembly **16**. Said limit switch is closed against contact **236** which is connected by line **238** to one side of the units solenoid **144**, the opposite side of said solenoid being connected by line **224** and **35** to ground. The pulses transmitted to solenoid **144** cause it to be energized and deenergized in response to said pulses to cause means (not shown) to advance wipers **18–21** inwardly along contacts **26–29** in response to the number of pulses dialed. If said wipers should reach the end of their travel without having closed against the number of the contacts in the contact banks **22** which was dialed, means (no shown) causes limit switch **140** to open from contact **236** and thereby prevent additional pulses from reaching solenoid **144**. As with the other embodiment of my invention, selection by the student of switch **163** will determine which of the wipers **19–21** will be interconnected between the dialed lesson number and headphones.

Relay **210** will remain energized during the second train of pulses by reason of blade **184** opening and closing against contact **186** to feed power to capacitor **227**. However, when student switch **175** is opened, the circuit to relay **182** will also be opened causing said relay to be deenergized. Deenergization of relay **182** causes switch blade **184** to move against its contact **185** so that power from line **48** is prevented from flowing to relay **210**, and as soon as capacitor **227** discharges, said relay will also be deenergized so that switch blade **212** will move against contact **213**. Thus, with switch blades **187** and **212** closed against their contacts **188** and **213**, power from line **48** will be transmitted through said switch blades and contacts to line **242** leading to switch blades **74** and **75** in the switch assembly **16**. The blades **74** and **75** are closed against their contacts **72** and **73** which are connected by line **76** to one side of the reset solenoid **78**, the opposite side of said solenoid being connected to ground **32** through lines **224** and **35**. This energizes reset solenoid **78** to cause it by means (not shown) to return the wipers **17-21** to home position. Thus, opening of student control switch **175** causes the wipers to be moved to their home position to reset the unit.

As has been described, the digital type student control shown in FIG. 2 and the dial type student control shown in FIG. 5 can be employed interchangeably in the system. Changing from one type of control to another merely involves changing the adapter module **14** or **14'** and its connections to its associated switching assembly **16** and the power supply **15**, as well as changing the connections from the power supply to the contact banks **22**. This can be simply and easily accomplished by plugging in the proper module **14** or **14'** into sockets $S_1$ and $S_2$ and plugging the proper control unit **10** or **10'** into socket $S_1$. For ease of description, each of the embodiments described herein has been described as employing a single student control unit connected to an individual module **14** or **14'**, an individual switching assembly **16**, an individual power supply **15**, and an individual bank of contacts **22**, with the lessons **23** being connected to the contact banks **22**. In practice, however, a single set of lessons **23** can be connected to pluralities of the contact banks **22**, and a single power source **15** is connected to pluralities of the student control units **10** and/or **10'**, contact banks, adapter modules **14** and/or **14'**, and switch assemblies **16**. It is to be understood, of course, that pluralities of both the control units **10** and **10'** with their associated modules **14** and **14'**, switching assemblies **16**, and contact banks **22** can be employed in the same system with a common power supply **15** and common set of lessons being connected thereto.

While my invention has been described as being used in association with a two-motion switch, it is to be understood, of course, that it may be employed with any type of conventional switch arrangement in which a plurality of messages can be selectively actuated.

I claim:

**1.** In a message retrieval system for supplying a plurality of audio messages to a remotely controlled listening station, the combination comprising a first and a second set of contacts arranged in a bank, a plurality of message source means connected to said second set of contacts, a switch assembly having first and second wipers movable together to contact said first and second sets of contacts respectively and having relay means adapted to drive said wipers, audio receiving means coupled to said second wiper, a selector switch located at the listening station, means for connecting a plurality of different voltage potentials to said first set of contacts and to said selector switch, and module means responsive to the positioning of said selector switch to produce signals for actuating said relay means to step said wipers along said sets of contacts until the voltage contacted by said first wiper corresponds to the voltage selected on said selector switch, wherein said module means comprises a PNP and an NPN transistor having their emitters connected together and their bases connected together and having their collectors connected to opposite potentials, the selector switch voltage being coupled to said bases and the first wiper voltage being coupled to said emitters, whereby transistor current

flow, caused by a base to emitter voltage difference, actuates said relay means.

2. The invention as set forth in claim 1 in which said selector switch has dual separately operable selecting contacts and said switch assembly comprises a two motion switch having a third wiper for movement with said first and second wipers to contact said first set of contacts, wiper switch means for alternately coupling said first and third wipers to the bases of said transistors to cause said switch assembly to be driven first in one direction to correspond to the positioning of one of said selecting contacts and then in its second direction of motion corresponding to the positioning of the other one of said selecting contacts.

3. The invention as set forth in claim 1 in which said second set of contacts forms a plurality of banks of contacts, each bank having a separate wiper engaged therewith and each contact having a separate message connected thereto, and further comprising a multiple position switch having a movable arm and at least as many contacts as there are banks of contacts in said second set, said multiple position switch contacts being connected respectively to said separate wipers and said movable arm being connected to said audio receiver means.



4. The invention as set forth in claim 3 further comprising means to reset said wipers to an initial position with each adjustment of said selector switch.


**References Cited**

UNITED STATES PATENTS

| | | |
|---|---|---|
| 1,237,208 | 8/1917 | Keith. |
| 1,555,952 | 10/1925 | Owen. |
| 2,547,043 | 4/1951 | Pouliart. |
| 2,688,659 | 9/1954 | Buchner. |
| 2,693,504 | 11/1954 | Buchner. |
| 1,812,169 | 6/1931 | Powell. |
| 2,328,562 | 9/1943 | Lesavoy. |
| 2,454,809 | 11/1948 | Kruithof et al. |
| 3,199,226 | 8/1965 | Joslow. |
| 3,217,104 | 11/1965 | Tabet. |



KATHLEEN H. CLAFFY, Primary Examiner

C. JIRAUCH, Assistant Examiner

U.S. Cl. X.R.

35—35