Jan. 25, 1927. 1,615,396

C. D. LORENZ

RAZOR CASE

Filed April 25, 1925 2 Sheets-Sheet 1

Fig. 1.

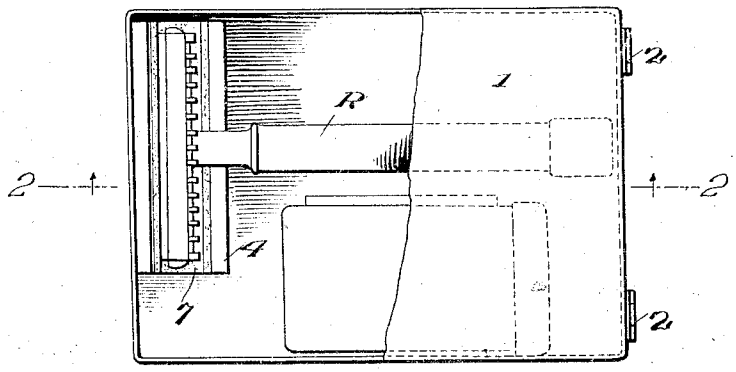

Fig. 2.

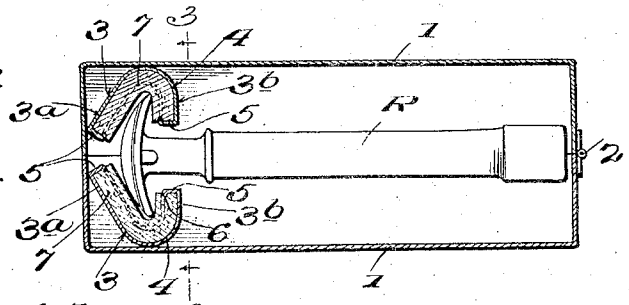

Fig. 3.

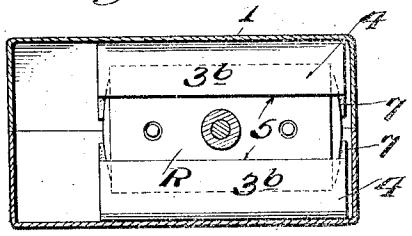

Fig. 4.

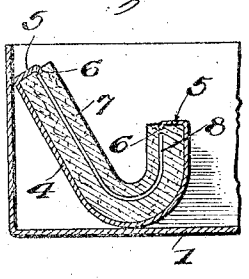

Fig. 5.

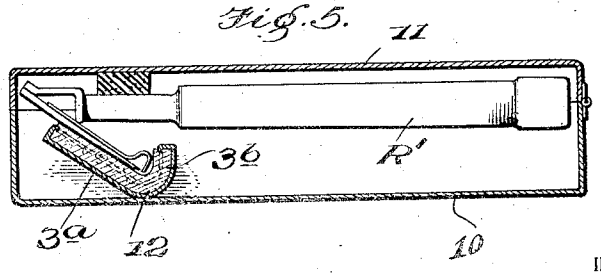

WITNESSES

W. A. Williams.

W. F. Buckley.

INVENTOR

C. D. Lorenz.

BY Munn & Co.

ATTORNEYS

Jan. 25, 1927. 1,615,396

C. D. LORENZ

RAZOR CASE

Filed April 25, 1925 2 Sheets-Sheet 2

Fig. 6.

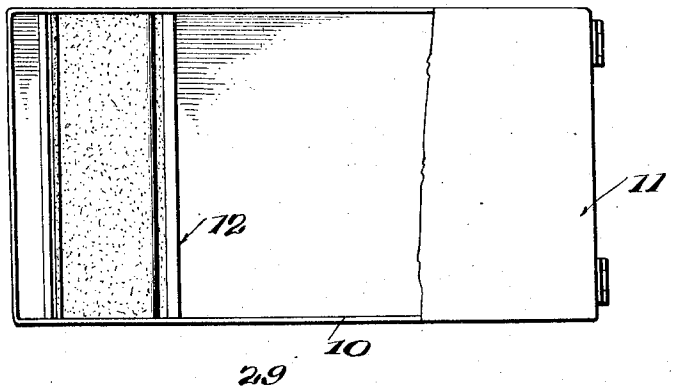

Fig. 7.

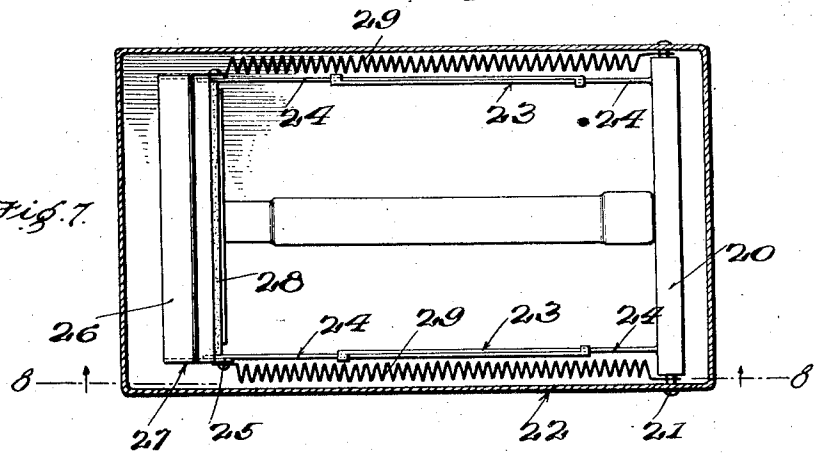

Fig. 8.

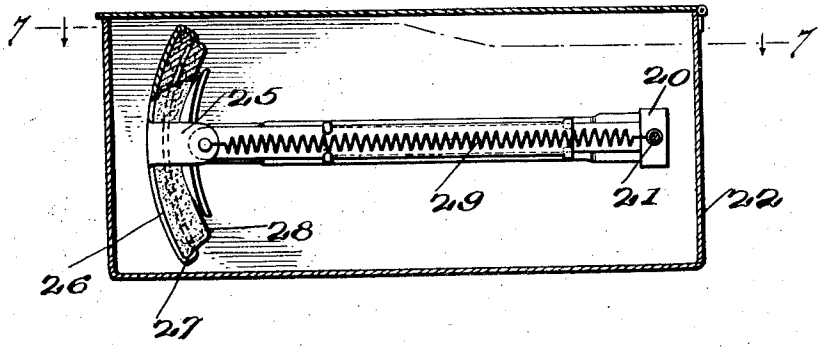

WITNESSES

W. A. Williams.

W. F. Buckley.

INVENTOR

C. D. Lorenz.

BY Munn & Co.

ATTORNEYS

Patented Jan. 25, 1927. 1,615,396

UNITED STATES PATENT OFFICE.

CHARLES DANIEL LORENZ, OF EL PASO, TEXAS.

RAZOR CASE.

Application filed April 25, 1925. Serial No. 25,934.

This invention relates to an improved razor case adapted for use with various styles and sizes of razors and the object of the invention resides in the provision of a device of this character designed and adapted to oil and condition the blade of the razor during the time the same is not in use and without the necessity of removing the blade from its mounting or disturbing its normal inactive position.

A further object resides in the provision of a case having the advantages and capacities specified and wherein the oil pads used to oil the blades are removably mounted in holders so as to readily be replaceable or removable for purpose of re-oiling or for other purposes.

Other objects and advantages reside in certain novel features of the construction, arrangement and combination of parts which will be hereinafter more fully described and particularly pointed out in the appended claims, reference being had to the accompanying drawings forming a part of this specification, and in which:

Figure 1 is a plan view of one embodiment of the invention, a portion of the top section being broken away for the sake of illustration;

Figure 2 is a view in longitudinal section on line 2—2 of Figure 1;

Figure 3 is a view in transverse section on line 3—3 of Figure 2;

Figure 4 is a fragmentary view in longitudinal section showing the structure of the pad and its holder;

Figure 5 is a view in longitudinal section showing another embodiment of the invention;

Figure 6 is a view in top plan of the form shown in Figure 5, a portion of the upper section of the case being broken away for the sake of illustration;

Figure 7 is a view in horizontal section on line 7—7 of Figure 8 showing another embodiment of the invention, and

Figure 8 is a view in section on line 8—8 of Figure 7.

In the form of the invention shown in Figures 1 to 4, a razor case of the type embodying a pair of similar sections 1 hinged at one end as at 2 and equipped at its other end with a suitable catch to hold the sections togther.

Within the case razor blade oiling devices designated generally at 3 are provided, one device being provided on each section and the devices being opposite or confronting when the sections of the case are closed. The form of the invention shown in Figures 1 to 4 is adapted for use with the double edge type of razor, one style of which is indicated at R, and the two devices are required to take care of the two edges of the razor.

Each device 3 is shaped and formed to receive and practically enclose the edge of the razor with which it coacts and comprises a metallic holder 4 suitably fastened to its section of the case and having flanges 5 at its ends, the flanges 5 having inturned lips 6. An oil pad 7 of absorbent or oil holding material is fitted in each holder. Felt or any other soft spongy material that will hold oil or grease may be used to make up the pads 7. Light spring wires 8 are embedded in each oil pad to brace it and help it retain its shape in the holder. The pads 7 are pressed in the holders 4 and are held therein by the flanges 5 and lips 6, the lips pressing down into the material of the pads above the wire thereof. Preferably the wires 8 are tensioned to hold the pads in the holders, that is to force the pads against the holders. In this form of the invention the device on the upper section not only serves to oil its edge but also serves as means for yieldably holding the razor on the other pad.

In the form of the invention shown in Figures 5 and 6 an adaptation of the invention to a different style case and razor is shown. In Figures 5 and 6 the case illustrated has a body portion 10 and a lid 11. The razor which is of the single edge type is indicated at R'. A single oiling device designated at 12 is provided in the body 10 and except for its shape is exactly the same as the devices 3 shown in Figures 1 to 3 and hereinabove described. In both embodiments of the invention the devices have a long portion or section 3^a to the pad portion of which the razor edge is presented and a short section 3^b which engages the guard to hold the razor with its edge presented to the other section. The only difference in the devices 3 and 10 resides in the variation of the angular relation of the sections.

As only one oiling device is provided in the form of the invention illustrated in Figures 5 and 6 an elastic block 15 is secured to the lid 11 and is engageable with the razor R' to hold it against its oiling device 10.

The form of the invention shown in Figures 7 and 8 is adapted for use with various sizes and types of razors and comprises a foot piece 20 having trunnions 21 pivoted on the sides of the case which is indicated at 22. Extensible side members 23 are carried by the foot piece 20 and comprise slidably connected sections 24. One section of each side member is connected to the foot piece 20 and the other section of each side member is pivotally or otherwise suitably connected to a lug 25 of the metallic holder 26 of an oiling device designated generally at 27. The oiling device 27 is similar to the oiling devices 3 and 10 although differently shaped and as before includes a spring reinforced pad 28 held in the holder as in the other forms. Retractile coil springs 29 are provided for contracting the extensible side members and holding the oiling device against the head of the razor and the handle of the razor against the foot piece.

It is to be understood that the present invention contemplates a reversal of the arrangement shown in Figs. 7 and 8. In the reversed form the oil pad holder is to be pivoted to the sides of the case and the foot piece carried by the extensible sides.

I claim:

1. A razor case having an oiling device against which the edge of the razor blade is presented while the blade is in the razor and when the razor is in the case and comprising a metallic holder and a pad of oil holding material carried by the holder and light springs embedded in the pad for maintaining the pad in the holder and for reinforcing the pad.

2. A razor case having a foot piece pivoted thereto, extensible side members including slidably interconnected sections, certain of the sections being fixed on the foot piece, an oiling device having a metallic holder provided with lugs pivoted to the other sections of the extensible side members, an oil pad mounted on the holder and springs for retracting the side members.

3. A razor case adapted to enclose and house a razor, a razor engaging foot piece pivoted to the casing, extensible members carried by said foot piece, springs for contracting the extensible members, and an oiling device carried by the extensible members and adapted to oil the edge of a razor blade while the blade is in the razor and when the razor is in the case.

4. A razor case having hinged sections adapted to entirely enclose and house a razor, an oil pad within the case against which the edge of the blade is presented while the blade is in the razor and when the razor is in the case, and means within and connected to the case and engageable with the handle of the razor to urge the razor against the pad.

5. In combination, a razor case having hinged sections forming when in one position a closed and complete housing for a razor, an oiling device located within the casing and comprising a separate metallic holder connected to a section of the casing and an oil pad in said holder against which the edge of the blade is presented while the blade is in the razor and when the razor is in the case, and means located within the case and connected thereto and engaging the razor to hold the razor against the pad.

CHARLES DANIEL LORENZ.