Office de la Propriété Intellectuelle du Canada
Un organisme d'Industrie Canada

Canadian Intellectual Property Office
An agency of Industry Canada

CA 2656084 A1 2008/01/10

(21) 2 656 084

(12) DEMANDE DE BREVET CANADIEN
CANADIAN PATENT APPLICATION

(13) A1

(86) Date de dépôt PCT/PCT Filing Date: 2007/06/28
(87) Date publication PCT/PCT Publication Date: 2008/01/10
(85) Entrée phase nationale/National Entry: 2008/12/22
(86) N° demande PCT/PCT Application No.: NO 2007/000240
(87) N° publication PCT/PCT Publication No.: 2008/004880
(30) Priorités/Priorities: 2006/07/03 (NO20063069); 2006/10/27 (NO20064944); 2007/06/20 (NO20073138)

(51) Cl.Int./Int.Cl. *F03B 3/10* (2006.01), *F17D 1/14* (2006.01), *E03B 7/02* (2006.01), *F03B 17/06* (2006.01)

(71) Demandeur/Applicant:
ENERGREEN AS, NO

(72) Inventeurs/Inventors:
VASSHUS, JAN KRISTIAN, NO;
MELHUS, TROND, NO

(74) Agent: OGILVY RENAULT LLP/S.E.N.C.R.L.,S.R.L.

(54) Titre : APPAREIL ET PROCEDE DE REGULATION DU POTENTIEL ENERGETIQUE DANS UNE COLONNE DE FLUIDE SITUEE DANS UNE CANALISATION

(54) Title: AN APPARATUS AND A METHOD FOR REGULATION OF THE ENERGY POTENTIAL IN A FLUID COLUMN LOCATED WITHIN A PIPELINE

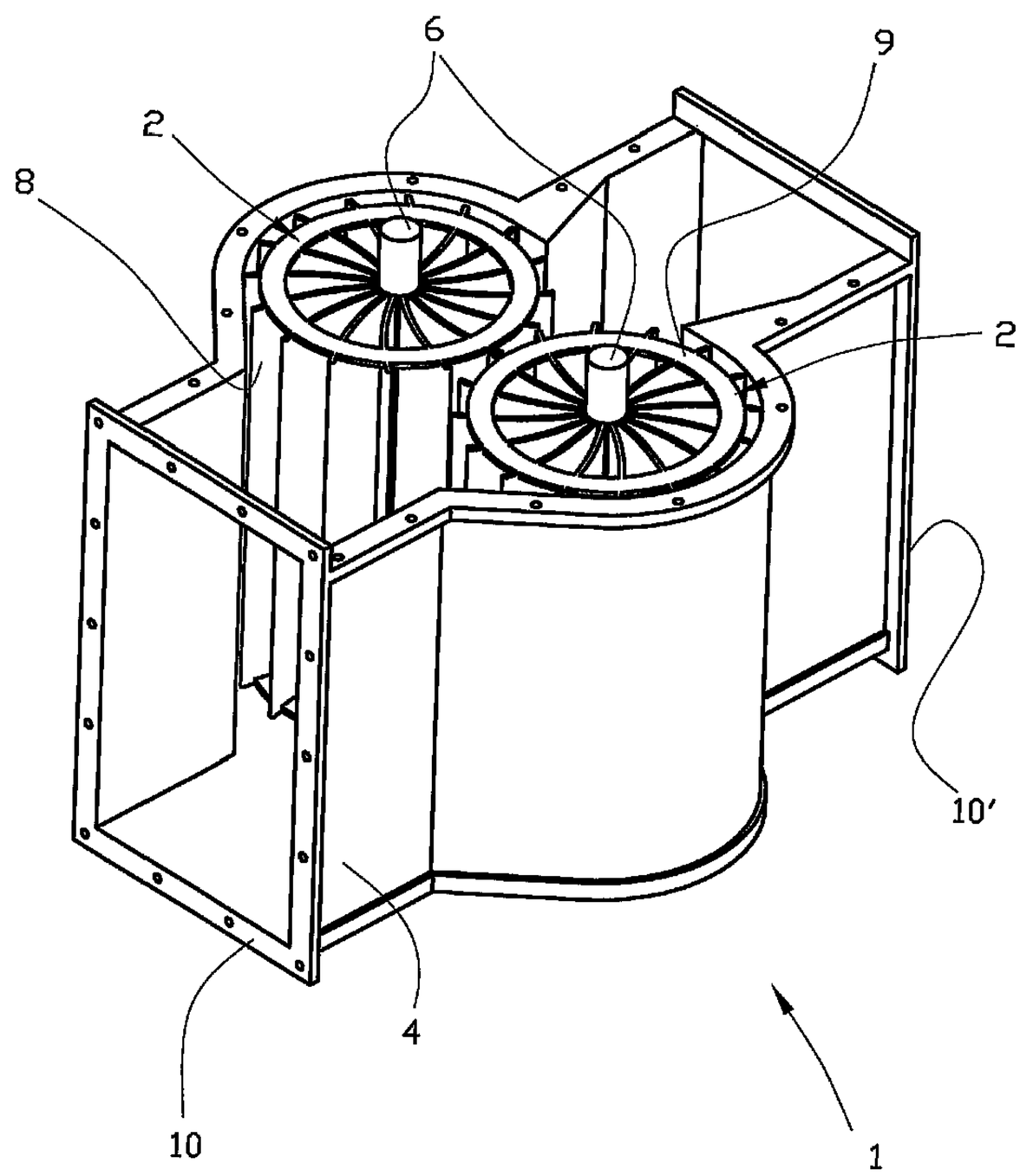

(57) Abrégé/Abstract:
The present invention describes an apparatus (1) and a method for use in regulation of the energy potential in a fluid column located within a pipeline (13), the apparatus (1) including two impellers (2), either one including a rotatable shaft (6) which is

(57) Abrégé(suite)/Abstract(continued):
provided with a plurality of vanes or plate-shaped blades (8), the impellers (2) being disposed in a housing (4) which constitutes a portion of the pipeline (13), the apparatus (1) communicating with a load (19, 21) and/or an energy source, so that the impellers (2) of the apparatus (1) are arranged to influence the movement of the fluid column within the pipeline (13), the apparatus (1) being arranged to receive the fluid column between the shafts (6) of the impellers (2), the centre axis of said shafts (6) being substantially in the same plane as wall portions of the housing (4) upstream and downstream of the vanes, whereby the rate of the fluid column through the apparatus substantially corresponds to the rate of the fluid column immediately upstream and/or downstream of the impellers (2) of the apparatus (1).

(12) INTERNATIONAL APPLICATION PUBLISHED UNDER THE PATENT COOPERATION TREATY (PCT)

(19) World Intellectual Property Organization
International Bureau

(43) International Publication Date
10 January 2008 (10.01.2008)

PCT

(10) International Publication Number
WO 2008/004880 A1

(51) International Patent Classification:
F03B 3/10 (2006.01) *E03B 7/02* (2006.01)
F17D 1/14 (2006.01) *F03B 17/06* (2006.01)

(21) International Application Number: PCT/NO2007/000240

(22) International Filing Date: 28 June 2007 (28.06.2007)

(25) Filing Language: Norwegian

(26) Publication Language: English

(30) Priority Data:

20063069	3 July 2006 (03.07.2006)	NO
20064944	27 October 2006 (27.10.2006)	NO
20073138	20 June 2007 (20.06.2007)	NO

(71) Applicant *(for all designated States except US)*: **ENERGREEN AS** [NO/NO]; Strandgaten 7, N-4307 Sandnes (NO).

(72) Inventors; and
(75) Inventors/Applicants *(for US only)*: **VASSHUS, Jan, Kristian** [NO/NO]; Prestheiveien 64, N-4325 Sandnes (NO). **MELHUS, Trond** [NO/NO]; Grevlingveien 29, N-4329 Sandnes (NO).

(74) Agent: **HÅMSØ PATENTBYRÅ ANS**; P.O. Box 171, N-4302 Sandnes (NO).

(81) Designated States *(unless otherwise indicated, for every kind of national protection available)*: AE, AG, AL, AM, AT, AU, AZ, BA, BB, BG, BH, BR, BW, BY, BZ, CA, CH, CN, CO, CR, CU, CZ, DE, DK, DM, DO, DZ, EC, EE, EG, ES, FI, GB, GD, GE, GH, GM, GT, HN, HR, HU, ID, IL, IN, IS, JP, KE, KG, KM, KN, KP, KR, KZ, LA, LC, LK, LR, LS, LT, LU, LY, MA, MD, ME, MG, MK, MN, MW, MX, MY, MZ, NA, NG, NI, NO, NZ, OM, PG, PH, PL, PT, RO, RS, RU, SC, SD, SE, SG, SK, SL, SM, SV, SY, TJ, TM, TN, TR, TT, TZ, UA, UG, US, UZ, VC, VN, ZA, ZM, ZW.

(84) Designated States *(unless otherwise indicated, for every kind of regional protection available)*: ARIPO (BW, GH, GM, KE, LS, MW, MZ, NA, SD, SL, SZ, TZ, UG, ZM, ZW), Eurasian (AM, AZ, BY, KG, KZ, MD, RU, TJ, TM), European (AT, BE, BG, CH, CY, CZ, DE, DK, EE, ES, FI,

[Continued on next page]

(54) Title: AN APPARATUS AND A METHOD FOR REGULATION OF THE ENERGY POTENTIAL IN A FLUID COLUMN LOCATED WITHIN A PIPELINE

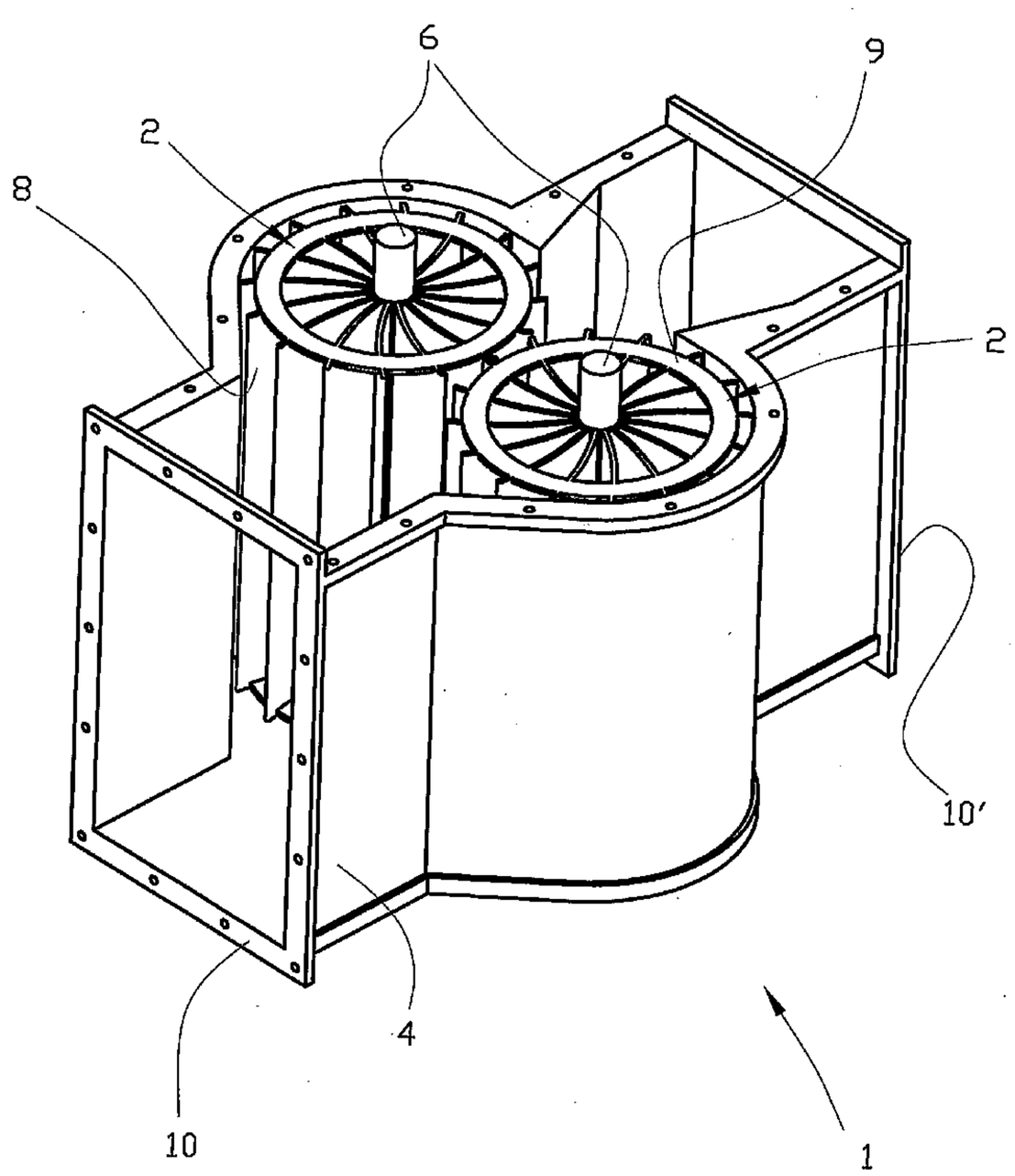

(57) Abstract: The present invention describes an apparatus (1) and a method for use in regulation of the energy potential in a fluid column located within a pipeline (13), the apparatus (1) including two impellers (2), either one including a rotatable shaft (6) which is provided with a plurality of vanes or plate-shaped blades (8), the impellers (2) being disposed in a housing (4) which constitutes a portion of the pipeline (13), the apparatus (1) communicating with a load (19, 21) and/or an energy source, so that the impellers (2) of the apparatus (1) are arranged to influence the movement of the fluid column within the pipeline (13), the apparatus (1) being arranged to receive the fluid column between the shafts (6) of the impellers (2), the centre axis of said shafts (6) being substantially in the same plane as wall portions of the housing (4) upstream and downstream of the vanes, whereby the rate of the fluid column through the apparatus substantially corresponds to the rate of the fluid column immediately upstream and/or downstream of the impellers (2) of the apparatus (1).

WO 2008/004880 A1

WO 2008/004880 A1

FR, GB, GR, HU, IE, IS, IT, LT, LU, LV, MC, MT, NL, PL, PT, RO, SE, SI, SK, TR), OAPI (BF, BJ, CF, CG, CI, CM, GA, GN, GQ, GW, ML, MR, NE, SN, TD, TG).

Published:

— *with international search report*

For two-letter codes and other abbreviations, refer to the "Guidance Notes on Codes and Abbreviations" appearing at the beginning of each regular issue of the PCT Gazette.

The Swedish Patent Office
PCT International Application

PCT/NO2007/000240
13-06-2008

AN APPARATUS AND A METHOD FOR REGULATION OF THE ENERGY POTENTIAL IN A FLUID COLUMN LOCATED WITHIN A PIPELINE

The present invention relates to an apparatus and a method for regulation of the energy potential in a fluid column located within a pipeline. More particularly, it relates to the integration of an apparatus including a drive means into a portion of the pipeline, the drive means being arranged to influence the movement of the fluid column within the pipeline.

Thus, the apparatus is arranged to produce a differential pressure between portions of the fluid column located upstream and downstream of the apparatus. The differential pressure could be positive or negative.

In those cases in which the differential pressure is positive, that is to say the fluid pressure downstream of the apparatus is greater than the fluid pressure upstream of the apparatus, the fluid will be supplied with energy from the apparatus. This could be achieved by means of any pumping device of a kind known *per se*.

In those cases in which said differential pressure is negative, that is to say the fluid pressure downstream of the apparatus is smaller than the fluid pressure upstream of the apparatus, the apparatus will be supplied with energy from the fluid. In the latter case the apparatus could be

AMENDED SHEET

The Swedish Patent Office
PCT International Application

connected to a load, such as, but not limited to, a generator for the production of electrical current.

Thus, the present invention relates to an apparatus, which is arranged, among other things, both to supply energy to a fluid column moving within a pipeline and to be supplied with energy from a fluid column moving within a pipeline.

By the term "fluid column" is meant in this document a fluid filling the internal cross-sectional area of the pipe. Preferably, the fluid is incompressible and may be, for example, but not limited to, water or other liquids. The fluid could also be a gas.

In what follows, a pressure reduction will be discussed among other things, that is to say the production of a negative differential pressure in a liquid flow, and then in particular a water flow. However, it will be understood that the apparatus according to the present invention could be used to reduce the pressure of a very large number of other fluids flowing in a pipeline. One example of such a fluid is a fluid which is produced in the petroleum industry, the fluid flowing from an underground formation up to an installation, for example at a sea surface.

In pipeline systems in which the fluid pressure is undesirably high, it is known to place one or more pressure-reducing valves to be able to reduce the pressure to the desired level. Alternatively or in addition to said pressure-reducing valve it is also usual to provide one or more so-called pressure-equalizing basin(s) to achieve said desired pressure reduction.

The water supply industry for consumption water is an example in which it is often imperative to use pressure-reducing means in the form of one or more pressure-reducing valve(s)

AMENDED SHEET

The Swedish Patent Office
PCT International Application

and/or pressure-equalizing basin(s) to ensure that the water pressure in the pipeline network does not exceed a predetermined level.

From the American patent US 4,390,331 is known a so-called lobe pump, which is arranged to be used as a pumping device or as a fluid-driven generator.

There are several drawbacks related to the above-mentioned prior art.

Pressure-equalizing basins can be constituted by open basins, vessels or containers, which are normally relatively big. Thus, such pressure-equalizing basins are resource-demanding to provide at least.

Pressure-reducing valves are considerably less resource demanding to provide than a pressure-equalizing basin. However, there is an environmental disadvantage related to the fact that it is not possible to utilize the energy that a fluid flow loses in a pressure-reducing valve.

To be able to utilize the energy present in, for example, a water flow, it is known that some waterworks have placed one or more water turbines known *per se* into the water flow. In that way it has been possible for some of the energy in the water to be used for power production, for example. However, for such a water turbine to work optimally there cannot be any counterpressure downstream of the water turbine. Thus, such a water turbine requires the water to flow to, for example, an open basin.

Lobe pumps of the kind disclosed in US 4,390,331, for example, have drawbacks related to the fluid flow which undergoes a substantial change of direction through the apparatus as the fluid is forced to flow on the "outside" of

The Swedish Patent Office
PCT International Application

the impellers (between the vanes and the jacket of the pump chamber) and not between the impellers. This change of direction also entails that the pump chamber is exposed to erosion from any particles, which might be carried with the fluid column. In addition the vanes or "lobes" of the impellers occupy a considerable proportion (41 %) of the volume within the pump chamber.

Altogether the above-mentioned substantial drawbacks make a lobe pump of the kind which is disclosed in, for example, US 4,390,331 and which is used as a motor, exhibit relatively poor efficiency, while at the same time being prone to erosion.

The invention has for its object to remedy or reduce at least one of the drawbacks of the prior art.

The object is achieved through features, which are specified in the description below and in the claims that follow.

In one aspect of the present invention there is provided an apparatus for use in controlling a differential pressure between a fluid column upstream and downstream of the apparatus, the apparatus including at least two impellers, either one comprising a rotatable shaft provided with a plurality of vanes or plate-shaped blades, the impellers being disposed in a housing which constitutes a portion of the pipeline, said shafts communicating with a controllable load and/or an energy source, the apparatus is arranged for receiving the fluid column between the shafts of the impellers and that the centre axis of said shafts being in substantially the same plane as the wall portions of the housing upstream and downstream of the impellers, whereby the velocity of the fluid column through the apparatus substantially corresponds to the velocity of the fluid column

The Swedish Patent Office
PCT International application

immediately upstream and/or downstream of the impellers of the apparatus, and that the impellers of the apparatus are arranged for providing a rotatable barrier for the fluid column in that at least one of the blades of each of the impellers is in substantially sealing contact with a first portion of the internal jacket surface of the housing, and that a portion of at least another one of the blades of each of the impellers in a sealing manner overlaps and abuts against a portion of at least one corresponding blade of the adjacent impeller, said barrier being influenced by said controllable load and/or energy source to provide any predetermined differential pressure between the fluid column upstream and downstream of the apparatus.

In a preferred embodiment the drive means is arranged to be controlled between: transmitting kinetic energy from the fluid column to a load; transmitting energy from an energy source to the fluid column; and retaining at least a portion of the fluid column from movement within the pipeline.

The load could be, for example, but not limited to, a generator known *per se* for the production of electrical energy.

Preferably, the load could be controlled with respect to desired pressure reduction in the fluid column and/or desired energy transmission from the fluid column to the load. The load could also be controlled with respect to other control parameters, such as the liquid level in a water basin or flow rate of the fluid column.

In one embodiment at least one of the blades of each of the impellers is in substantially sealing contact with a first portion of the internal jacket surface of the housing, and at least another one of the blades of each of the impellers is

AMENDED SHEET

The Swedish Patent Office
PCT International Application

in contact with a corresponding blade of the adjacent impeller, so that the two impellers may provide a barrier to movement of a portion of the fluid column exerting a pressure on the two impellers. If the drive means of the apparatus, for example impellers, is retained or restrained from rotation, it could provide a barrier to movement of at least a portion of the fluid column. Thus, the apparatus according to the present invention could also be used as a shut-off valve or as a choke valve.

In one embodiment the apparatus is further provided with an elongated dividing element, which is placed in at least a portion of the apparatus. In a preferred embodiment the longitudinal axis of the dividing element is substantially parallel to an axis extending between the inlet portion and outlet portion of the apparatus.

In one embodiment the dividing element is further provided with at least one fluid column control element or a flap, which is hinged to a portion of the dividing element to control the distribution of the fluid column between the two impellers. When the longitudinal axis of the fluid column control element is disposed coaxially to the longitudinal axis of the dividing element, the fluid column may be distributed substantially evenly between the two impellers. When the longitudinal axis of the fluid column control element is disposed at an angle relative to the centre axis of the dividing element, the fluid column will be distributed unevenly between the two impellers. In a position in which the fluid column control element extends from a portion of the dividing element to a portion of the jacket surface of the housing, the major part of the fluid column will be carried to just one of the two impellers. This is particularly useful when the fluid column is moving

AMENDED SHEET

The Swedish Patent Office
PCT International Application

relatively slowly through the apparatus. By restricting the fluid column in such a way that the main part of it is passing just one vane, the velocity of the fluid column and thereby the rotational speed of the vane will be increased.

The ability to direct the fluid column away from one of the two impellers has also turned out to be useful in connection with maintenance of the apparatus.

The position of the fluid column control element relative to the position of the dividing element is arranged to be controlled manually or automatically by means of a control device known *per se*.

In a second aspect of the present invention there is provided a method for controlling a differential pressure in a fluid column located within a pipeline (13), wherein the method includes the steps of:

integrating in the pipeline an apparatus which includes at least two impellers, either one comprising a rotatable shaft provided with a plurality of vanes or plate-shaped blades, the impellers being disposed in a housing which constitutes a portion of the pipeline, said shafts communicating with a controllable load and/or energy source, and the centre axis of said shafts being in substantially the same plane as the wall portions of the housing upstream and downstream of the impellers, whereby the velocity of the fluid column through the apparatus substantially corresponds to the velocity of the fluid column immediately upstream and/or downstream of the impellers of the apparatus, and that the impellers of the apparatus are arranged for providing a rotatable barrier for the fluid column in that at least one of the blades of each of the impellers is in substantially sealing contact with a first portion of the internal jacket surface of the housing, and that a portion of at least

The Swedish Patent Office
PCT International Application

another one of the blades of each of the impellers in a sealing manner overlaps and abuts against a portion of at least one corresponding blade of the adjacent impeller, said barrier being influenced by said controllable load and/or energy source to provide any predetermined differential pressure between the fluid column upstream and downstream of the apparatus; and

controlling the rotation of said impellers by the controllable load and/or energy source communicating with the shafts of the impellers to provide any predetermined differential pressure between the pressures of the fluid column upstream and downstream of the apparatus.

The load and the energy source are preferably located outside the apparatus, but in alternative embodiments the load and/or energy source could be within the apparatus.

In cases in which the primary object is to provide a pressure reduction in, for example, a water distribution network, a lobe pump known *per se*, of the kind disclosed in, for example, US 4,390,331 could provide relatively satisfactory results.

The lobe pump could also be connected to a load such as, for example, a generator, but then with a significantly poorer efficiency relative to the apparatus according to the present invention.

However, in cases in which the primary object is to achieve the highest efficiency possible from the energy extracted from the fluid column, and/or the object is to provide a shut-off valve, an apparatus according to the description that follows, has surprisingly turned out to have substantial advantages over said lobe pump.

In what follows is described a non-limiting example of a

AMENDED SHEET

The Swedish Patent Office
PCT International Application

preferred embodiment which is visualized in the accompanying drawings, in which:

Figure 1 shows a perspective view of an apparatus in accordance with the present invention formed by two impellers disposed within a housing;

Figure 2 shows, on a larger scale, a top view of the apparatus of figure 1;

Figure 3 shows, on a larger scale, a view of the apparatus of figure 1, viewed towards an inlet or an outlet portion;

Figure 4 shows an apparatus corresponding to that of figure 1, but the apparatus is further provided with a dividing element disposed between the two impellers of the apparatus;

Figure 5 shows, on a larger scale, the apparatus of figure 4, viewed from above, but the dividing element is further provided with a fluid column control element in the form of a flap which is in a first position;

Figure 6 shows the apparatus of figure 5, but the flap has been moved into a second position;

Figure 7 shows, on a smaller scale, a principle drawing of a portion of a water supply system in a lateral view, two apparatuses in accordance with the present invention being disposed in portions of the pipeline of the water supply system; and

Figure 8 shows the water supply system of figure 7, viewed from above.

AMENDED SHEET

The Swedish Patent and Registration Office

Figures 1-6 show an apparatus 1 which is formed by two impellers 2 which are encased in a pump housing 4. Either one of the two impellers 2 is formed by a central shaft 6 from which extend sixteen impeller blades 8. For clarity the top portion of the pump housing 4 has been removed. However, it will be understood that the jacket portion of the pump housing 4 is fluid-tight in use, and that the apparatus 1 is connected, at either end portion 10, 10', to some form of fluid-conveying device, such as a pipeline (not shown).

At their upper and lower end portions the impeller blades 8 are attached to an annular element 9 which helps, among other things, to maintain the spacing of the vanes.

A skilled person will understand that rotation of the two impellers 2 shown in figures 1-3 must run synchronously in opposite directions, that is clockwise and anticlockwise, which is controlled by means of means known *per se*.

The longitudinal axis of the central shaft 6 is disposed substantially perpendicularly to a longitudinal axis of a fluid column (not shown) located at least upstream of the impellers 2 of the apparatus 1.

When a substantially incompressible fluid column is moving through the apparatus 1, the impellers 2 will rotate proportionally to the movement of the fluid column. This is due to sealing contact between a number of the impeller blades 8 and the pump housing 4, and sealing contact between two impeller blades 8 abutting each other. This can best be seen in figure 2.

In the figures 4-6 is shown an alternative embodiment of the apparatus 1 shown in the figures 1-3. In figure 4 the apparatus is further provided with an elongated dividing element 30. The dividing element 30 is provided with a

The Swedish Patent Office
PCT International application

biconcave portion. The biconcave portion is complementarily adapted to the diameter of the impellers 2, so that the end portions of the impeller blades 8 may be moved substantially sealingly in contact with the dividing element 30.

With the shown embodiment of the dividing element 30 and the shown number of impeller blades 8 there are always two impeller blades 8 of each vane 2 in contact with the dividing element 30. By another design of the dividing element 30 a number of impeller blades 8 other than two, for example one or three or more, could be in contact with the dividing element 30.

It will be understood that in an alternative embodiment (not shown) the impeller blades 8 could have a small clearance to the dividing element 30 and possibly to the jacket of the housing 4. The latter solution is advantageous with respect to wear, but could not provide equally good sealing between the impellers 2 and dividing element 30 and possibly the jacket of the housing 4.

The dividing element 30 is secured to at least one portion of the jacket of the housing 4.

The dividing element 30 provides at least two properties which could be advantageous viewed in relation to the apparatus 1 shown in the figures 1-3.

One of said two advantages relates to sealing between the impeller blades 8 and dividing element 30. Sealing is achieved in the same way as for sealing between the impeller blades 8 and the jacket portion of the housing 4.

The other one of said two advantages relates to the fact that the dividing element 30 eliminates the need for the impellers 2 to rotate synchronously or at equal speed.

AMENDED SHEET

The Swedish Patent and Registration Office

In figure 5 is shown the apparatus of figure 4, viewed from above, but with a fluid column control element 32 in the form of a flap hinged to an end portion of the dividing element 30.

The fluid column control element 32 is arranged to be adjusted between a position as shown in figure 5 and a position shown in figure 6. It will be understood that in a preferred embodiment the fluid column control element 32 could be rotated into abutment also on the jacket surface of the apparatus opposite that shown in said figure. It will also be understood that the fluid column control element 32 could be placed in any position between said extreme positions.

In the figures 5 and 6 the direction of flow of the fluid column is preferably from the top towards the bottom of the drawings.

By connecting a load 19, 21 (see figure 8) to at least one of the two shafts 6 of the impellers 2 in the apparatus shown in the figures 1-3, the impellers 2 will work as a "brake" on the movement of the fluid column. Parts of the kinetic energy which is transmitted from the fluid column to the load 19, 21 may be utilized, in a case in which the load 19, 21 is formed by a generator, for producing electrical energy. At the same time a negative differential pressure could be provided across the apparatus 1.

In the embodiment shown in the figures 4-6, a load 19, 21 will have to be connected to the shafts 6 of both impellers 2, as these are rotated independently of each other. However, a skilled person will understand that a synchronizing mechanism (not shown) could be connected to a portion of the impellers 2, for example the shafts 6, so that a load 19, 21

AMENDED SHEET

The Swedish Patent Office
PCT International Application

will have to be connected to just one of the shafts 6 of the two impellers 2.

Moreover, rotation of the impellers 2 will provide movement of the fluid column. When the fluid column is formed by a substantially incompressible fluid, the movement will be proportional to the rotation of the impellers 2. The rotation of the impellers 2 in the apparatus shown in the figures 1-3 is provided by means of a force applied to at least one of the shafts 6 from a drive means, not shown, such as a motor. Thus, the fluid column could selectively be moved in the desired direction through the apparatus 1 by controlling the direction of rotation of the impellers 2. A skilled person will understand that by corresponding rotation of the impellers 2 of the apparatus 1 shown in the figures 4-6, a force will have to be applied to both shafts. However, a synchronizing mechanism (not shown) could be connected to, for example, the shafts 6, so that said force is applied to just one of the two shafts 6 shown.

In one embodiment (not shown) the apparatus 1 is provided with a synchronizing device between the shafts 6 of the impellers 2, which are influenced by the position of the fluid column control element 32 in the apparatus 1. Thus, the shafts could be synchronized / connected in terms of force when the fluid control element 32 is in the mid position as shown in figure 5. When the fluid control element 32 is pivoted over a predetermined angle from said mid position, the synchronizing device is arranged to disengage the interconnection of the shafts 6. For example, a synchronizing device could make the left shaft 6 shown in figure 6 be disengaged from the right shaft 6, so that a force will only act on the right shaft 6.

If the shafts 6 of the impellers 2 are retained from

AMENDED SHEET

The Swedish Patent Office
International Application

rotation, movement of an incompressible fluid column will cease at least upstream of the apparatus 1.

The possibilities of selectively producing rotation of the impellers 2, both clockwise and anticlockwise, also have the positive side-effect of making it easier for any foreign bodies that might wedge in the apparatus 1 to be removed through a reciprocating movement of the fluid column. Such a movement is achieved by effecting a reciprocating clockwise and anticlockwise rotation of each of the impellers 2.

Reference is made to the figures 7 and 8. The figures are only principle drawings, which do not show the individual elements to scale, and which are only made to illustrate the main features of one aspect of the invention.

In the drawings the reference numeral 12 indicates a water supply system including a pipeline 13 which is connected at a first end portion to a drinking water source 15, and which is connected by its second end portion to a distribution pipeline network 17.

The drinking water source 15 may be, for example, a water treatment plant known *per se*.

In the pipeline 13 there are disposed two identical apparatuses 1 in the form of pumping devices. The pumping devices 1 are spaced apart both in the horizontal plane and in the vertical plane.

The purpose of the pumping device 1 is to reduce the pressure, which arises as a consequence of the difference in elevation between the drinking water source 15 and the lower-lying distribution pipeline network 17. Without the pumping devices 1 the pressure on the distribution pipeline network 17 could become too high.

The Swedish Patent Office
PCT International Application

A proportion of the energy that the fluid column or water flow has at the inlet to either one of the pumping devices 1 is consumed to drive the pumping devices 1. Thus, the pumping devices 1 cause a loss of energy from the water flow, in turn leading to reduced pressure downstream of either one of the pumps 1. The amount of energy extracted at either one of the pumps 1 could be controlled by, for example, a centrifugal brake (not shown) known *per se*.

By means of the pumps 1 the pressure at the distribution pipeline network 17 could therefore be adjusted to the desired level.

To be able to utilize the energy extracted from the water flow in the pipeline 13 by means of the pumping devices 1, these are each connected to a respective power generator 19, 21 of a kind known *per se*.

Thus, the pumps 1 will function both as a "pressure-reducing valve" and also as an energy source for a power generator in which the difference between the pressure available as a consequence of a difference in elevation between the drinking water source 15 and distribution network 17 and the pressure desired or required at the distribution pipeline network 17 is utilized for energy production. It will be understood that the pumping devices 1 could also be supplied with energy from an external energy source (not shown) and, thus, bring about a positive differential pressure in the fluid column, possibly pump the water up towards the drinking water source 15. The pumping device 1 could also work as a shut-off valve by the drive means 2 of the pump being retained from rotation so that at least a portion of the fluid column is prevented from moving within the pipeline 13.

Even though the pumps 1 are shown to be placed in series, a

The Swedish Patent Office
PCT International application

skilled person will understand that the pumps 1 could also be placed in parallel and that any number of pumps could be disposed as required and according to the pressure reduction desired. In cases in which the pressure at the distribution pipeline network 17 is not critical, the amount of energy extracted by means of the pumping devices 1 could be controlled with respect to the energy requirement.

A skilled person will also understand that the pipeline 13 could advantageously be provided with a so-called "bypass line" (not shown) which could lead the water flow, by means of valve devices for example, past either one of the pumps 1, so that the water flow could be maintained in connection with maintenance on one or both pump(s) 1.

Thereby the apparatus according to the present invention could surprisingly be used both as a pressure-reducing device and as a shut-off valve in addition to being usable as a pump and as an energy source for a generator for the production of electrical current.

As the pumps 1 are very easy to place into both new and existing fluid flow systems, and as substantial parts of the energy extracted from the water flow by means of the pumps could be utilized for electrical energy, the present invention represents a considerable resource and an environmental gain over the prior art, in which costly pressure-equalizing basins or pressure-reducing valves are used to adjust the pressure of a fluid column to a desired or required level. Thus, the use of energy, which could be extracted from a fluid flow by means of the present invention, represents use of energy, which is wasted today.

The Swedish Patent Office
PCT International Application

Patent application no. PCT/NO2007/000240
Applicant Energreen AS
Date June 13, 2008

PCT/NO2007/000240
13-06-2008

Amended claims

1. An apparatus (1) for use in controlling a differential pressure between a fluid column upstream and downstream of the apparatus (1), the apparatus (1) including at least two impellers (2), either one comprising a rotatable shaft (6) provided with a plurality of vanes or plate-shaped blades (8), the impellers (2) being disposed in a housing (4) which constitutes a portion of the pipeline (13), said shafts (6) communicating with a controllable load (19, 21) and/or an energy source, characterized in that the apparatus (1) is arranged for receiving the fluid column between the shafts (6) of the impellers (2) and that the centre axis of said shafts (6) being in substantially the same plane as the wall portions of the housing (4) upstream and downstream of the impellers (2), whereby the velocity of the fluid column through the apparatus (1) substantially corresponds to the velocity of the fluid column immediately upstream and/or downstream of the impellers (2) of the apparatus (1), and that the impellers (2) of the apparatus (1) are arranged for providing a rotatable barrier for the fluid column in that at least one of the blades (8) of each of the impellers (2) is in substantially sealing contact with a first portion of the internal jacket surface of the housing (4), and that a portion of at least another one of the blades (8) of each of the impellers (2) in a sealing manner overlaps and abuts against a portion of at least one corresponding blade (8) of the adjacent impeller (2), said barrier being influenced by said controllable

AMENDED SHEET

PCT International Application

load (19, 21) and/or energy source to provide any predetermined differential pressure between the fluid column upstream and downstream of the apparatus (1).

2. The apparatus in accordance with claim 1, c h a - r a c t e r i z e d i n that at least one of the blades (8) of each of the impellers (2) is constantly in substantially sealing contact with an elongated dividing element (30) which is disposed in a portion of the apparatus (1), said dividing element (30) providing a partition between the impellers (2).

3. The apparatus in accordance with claim 2, c h a - r a c t e r i z e d i n that a longitudinal axis of the dividing element (30) is substantially parallel to an axis extending between the inlet portion and outlet portion of the apparatus (1).

4. The apparatus in accordance with claim 2 or 3, c h a r a c t e r i z e d i n that at least a portion of the dividing element (30) is provided with a biconcave shape.

5. The apparatus in accordance with any one of the claims 2-4, c h a r a c t e r i z e d i n that the dividing element (30) is further provided with at least one fluid column control element (32) pivotal disposed at a portion of the dividing element (30) to control of the distribution of the fluid column between the two impellers (2).

6. The apparatus in accordance with any one of the preceding claims, c h a r a c t e r i z e d i n that the controllable load (19, 21) is a generator for producing electrical energy.

The Swedish Patent Office
PCT International Application

7. A method for controlling a differential pressure in a fluid column located within a pipeline (13), characterized in that the method includes the steps of:

integrating in the pipeline (13) an apparatus (1) which includes at least two impellers (2), either one comprising a rotatable shaft (6) provided with a plurality of vanes or plate-shaped blades (8), the impellers (2) being disposed in a housing (4) which constitutes a portion of the pipeline (13), said shafts (6) communicating with a controllable load (19, 21) and/or energy source, and the centre axis of said shafts (6) being in substantially the same plane as the wall portions of the housing (4) upstream and downstream of the impellers (2), whereby the velocity of the fluid column through the apparatus (1) substantially corresponds to the velocity of the fluid column immediately upstream and/or downstream of the impellers (2) of the apparatus (1), and that the impellers (2) of the apparatus (1) are arranged for providing a rotatable barrier for the fluid column in that at least one of the blades (8) of each of the impellers (2) is in substantially sealing contact with a first portion of the internal jacket surface of the housing (4), and that a portion of at least another one of the blades (8) of each of the impellers (2) in a sealing manner overlaps and abuts against a portion of at least one corresponding blade (8) of the adjacent impeller (2), said barrier being influenced by said controllable load (19, 21) and/or energy source to provide any predetermined differential pressure between the fluid column upstream and downstream of the apparatus (1); and

The Swedish Patent Office
PCT International Application

controlling the rotation of said impellers (2) by the controllable load (19, 21) and/or energy source communicating with the shafts (6) of the impellers (2) to provide any predetermined differential pressure between the pressures of the fluid column upstream and downstream of the apparatus (1).

8. The method in accordance with claim 7, characterized in that the controllable load (19, 21) is a generator for producing electrical energy.

9. The method in accordance with claim 7, characterized in that the method further comprising including in the apparatus (1) a dividing element (30) for providing a partition between the impellers (2).

10. The method in accordance with claim 9, characterized in that the method further comprising distributing the fluid between the impellers (2) by means of the dividing element (30) and a fluid column control element (32).

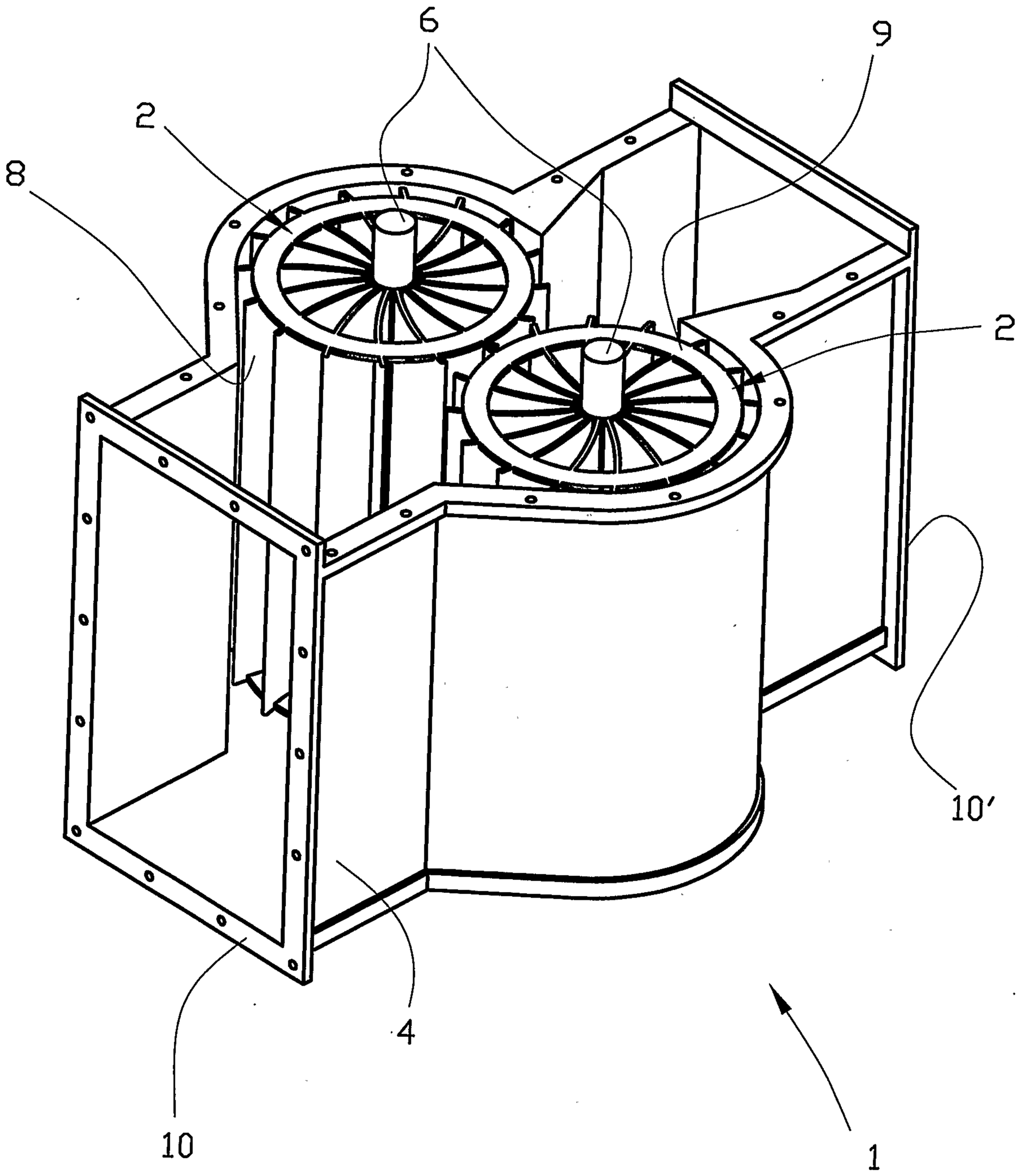

Fig. 1

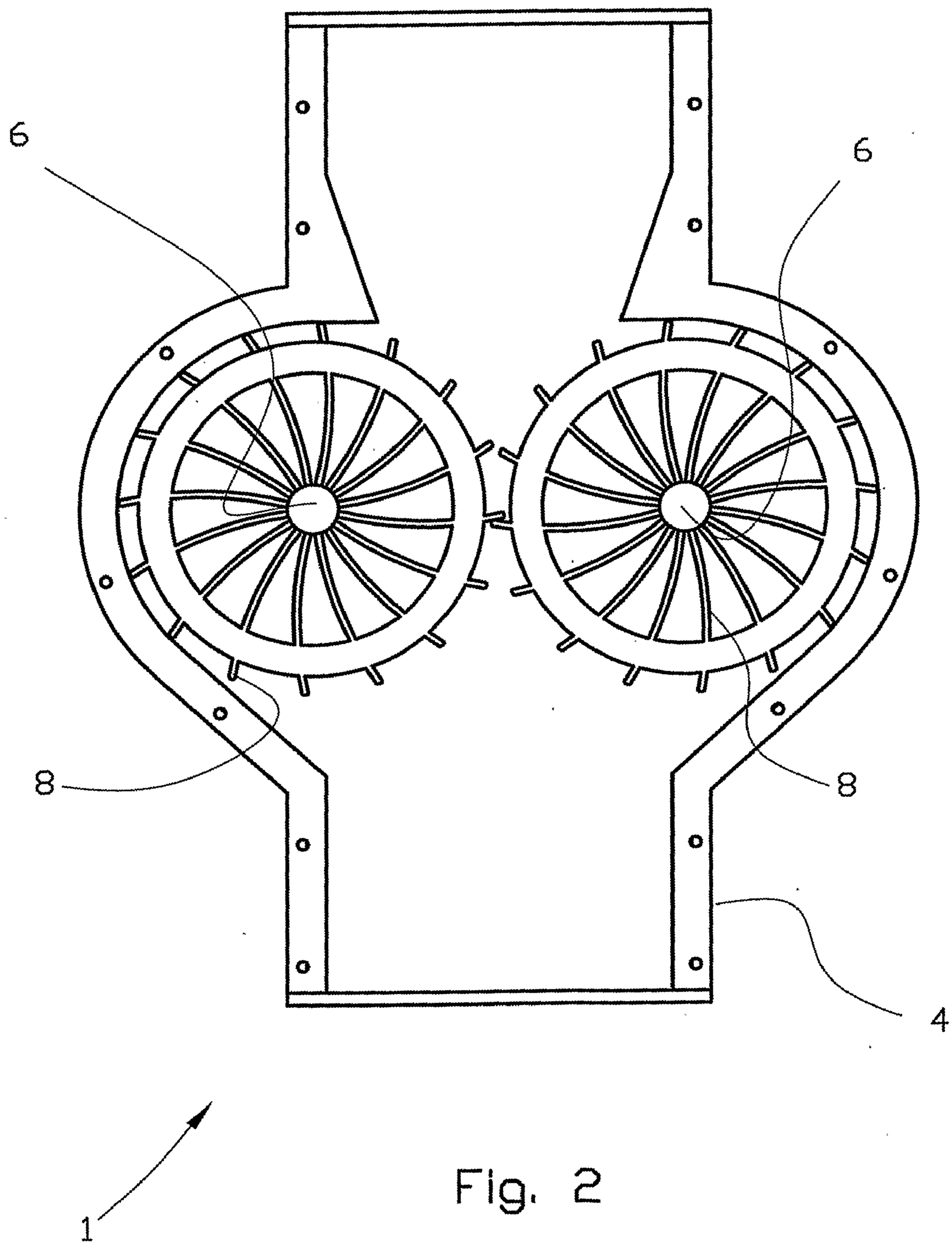

Fig. 2

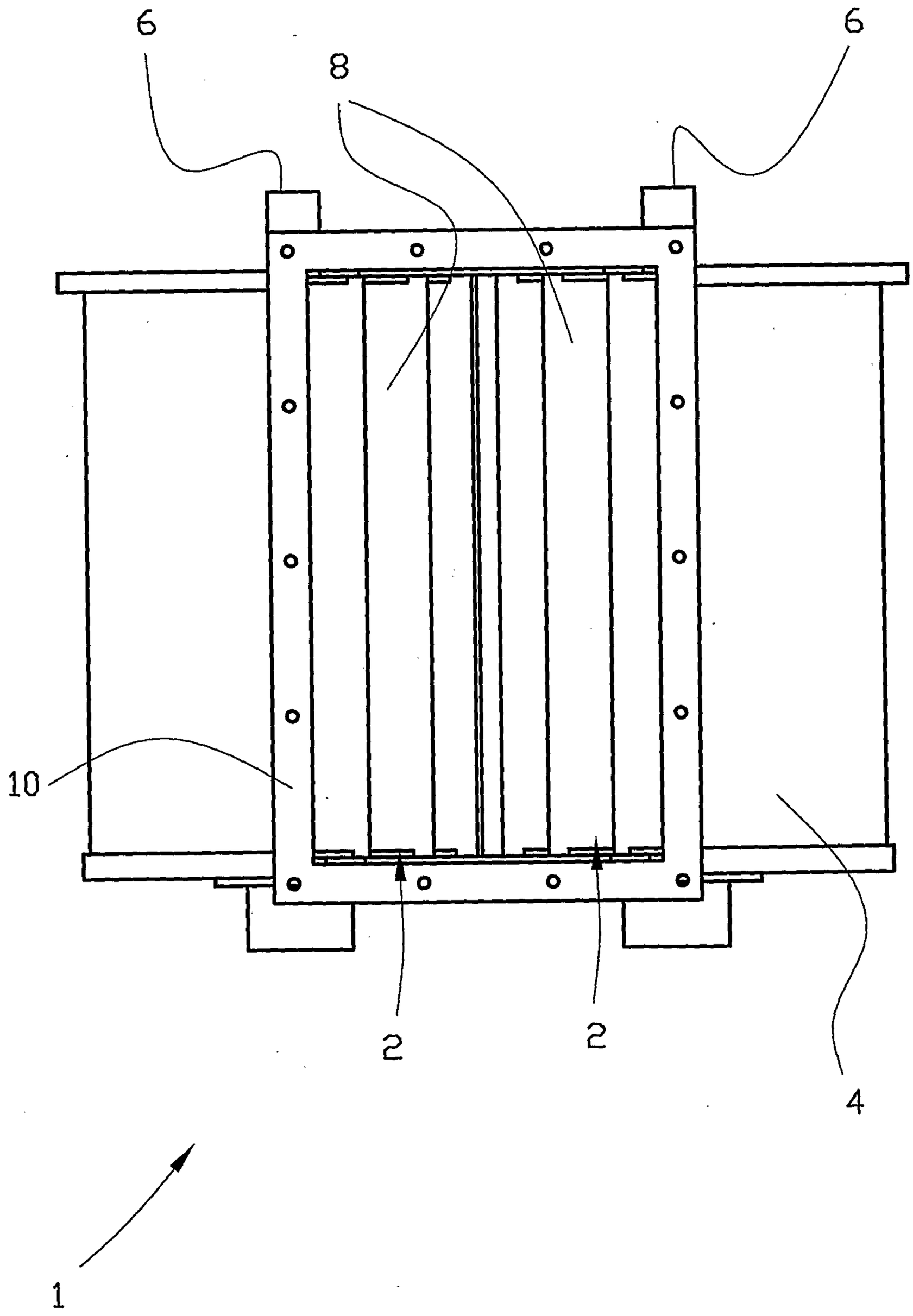

Fig. 3

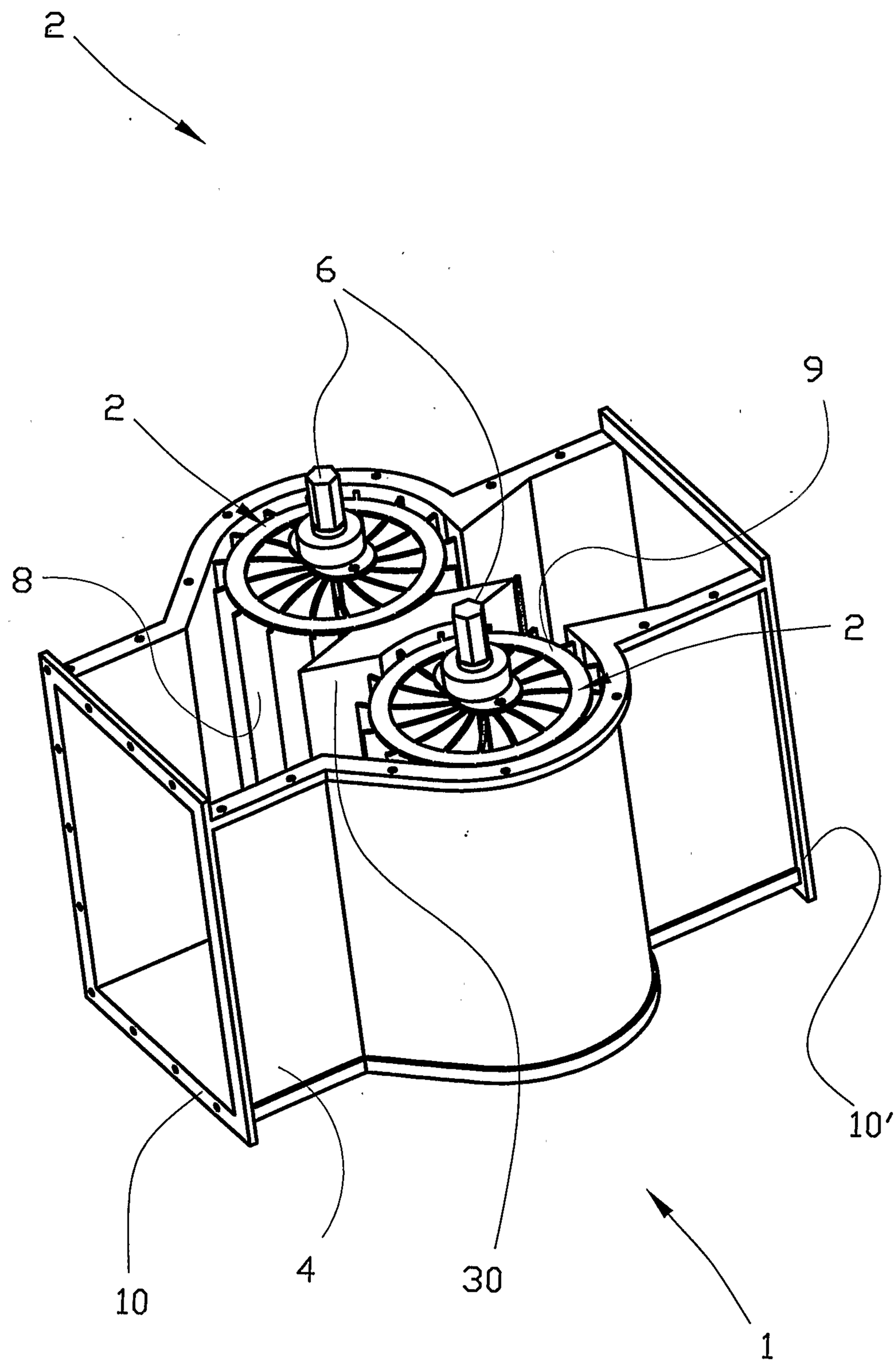

Fig. 4

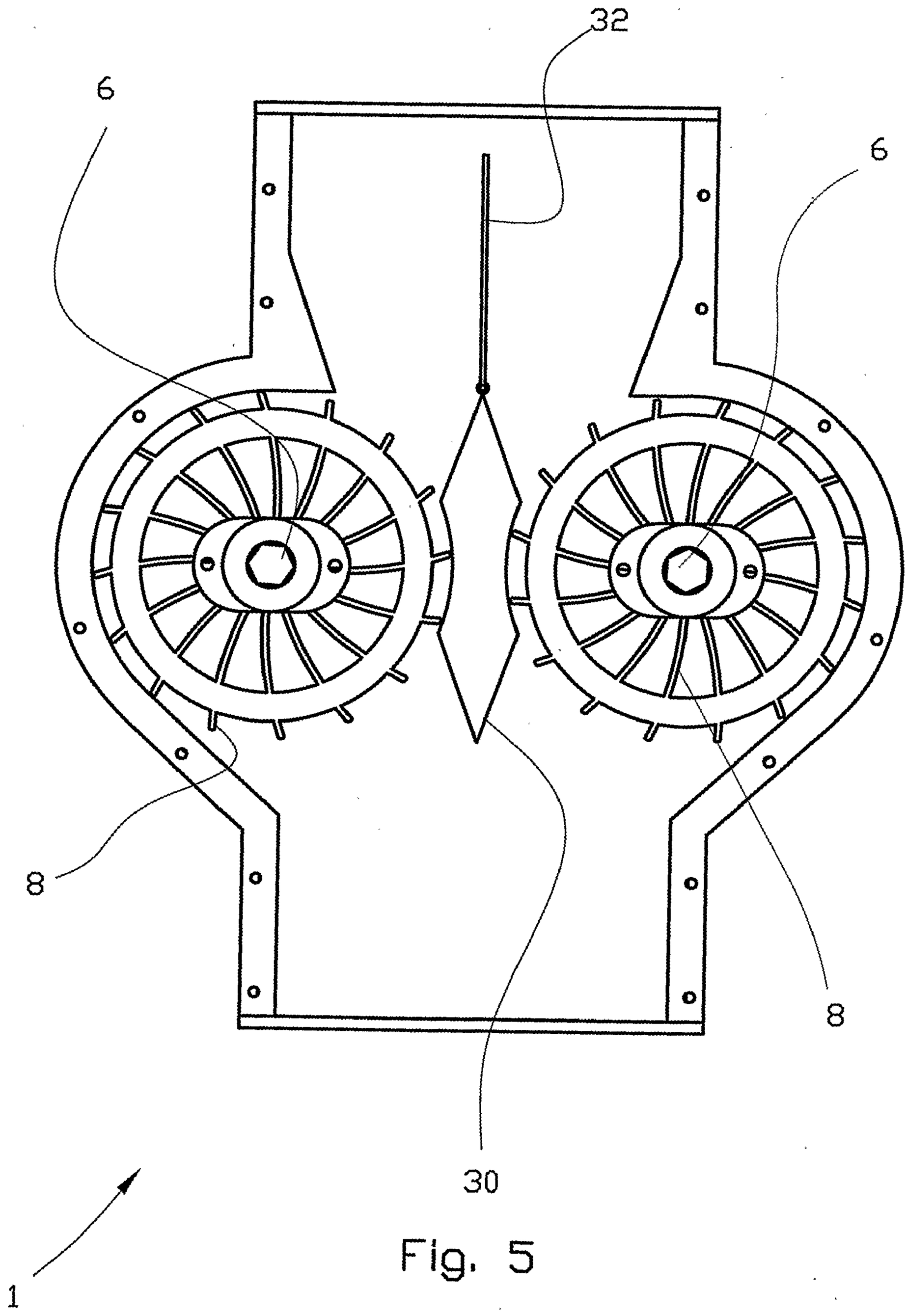

Fig. 5

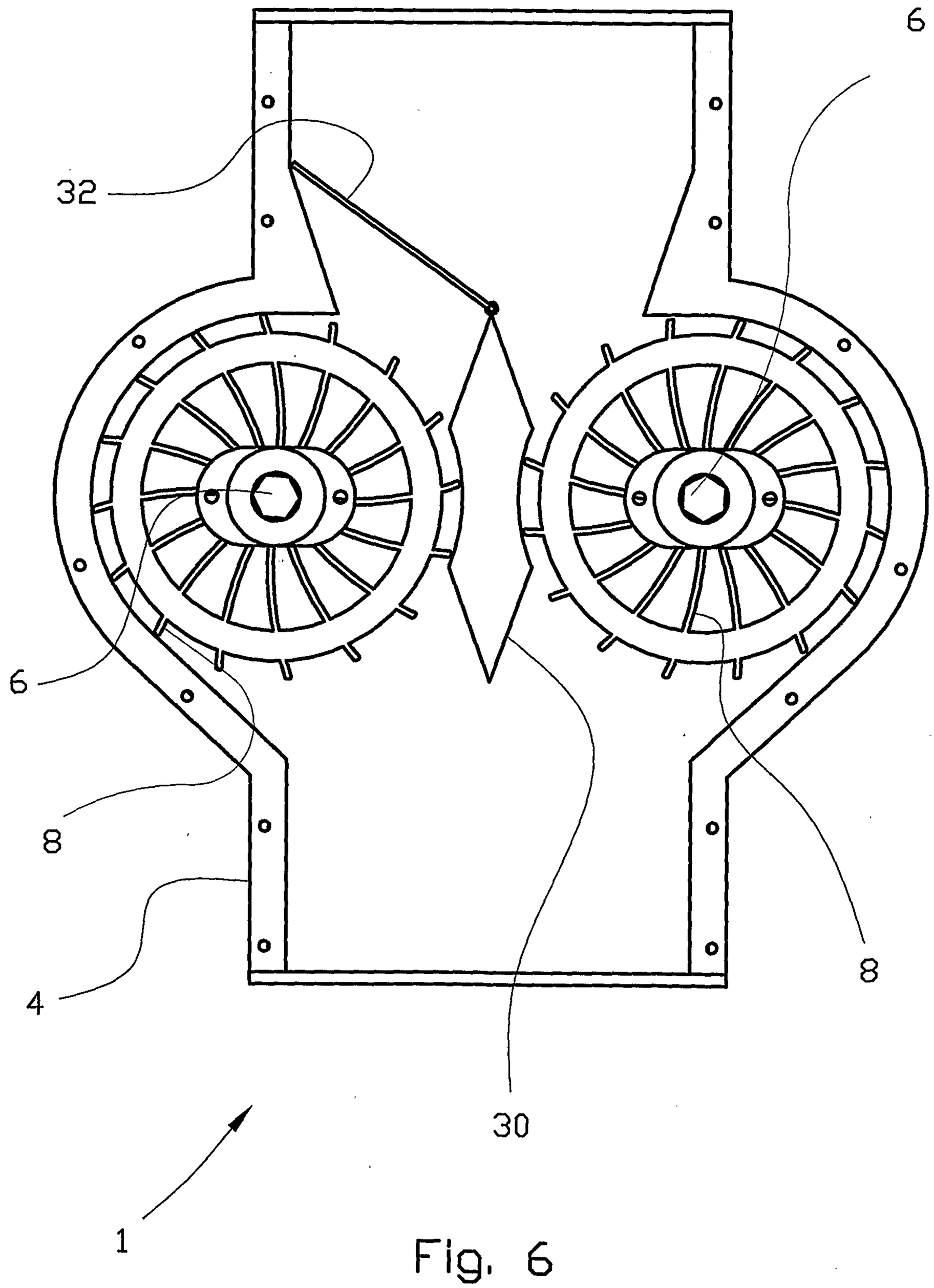

Fig. 6

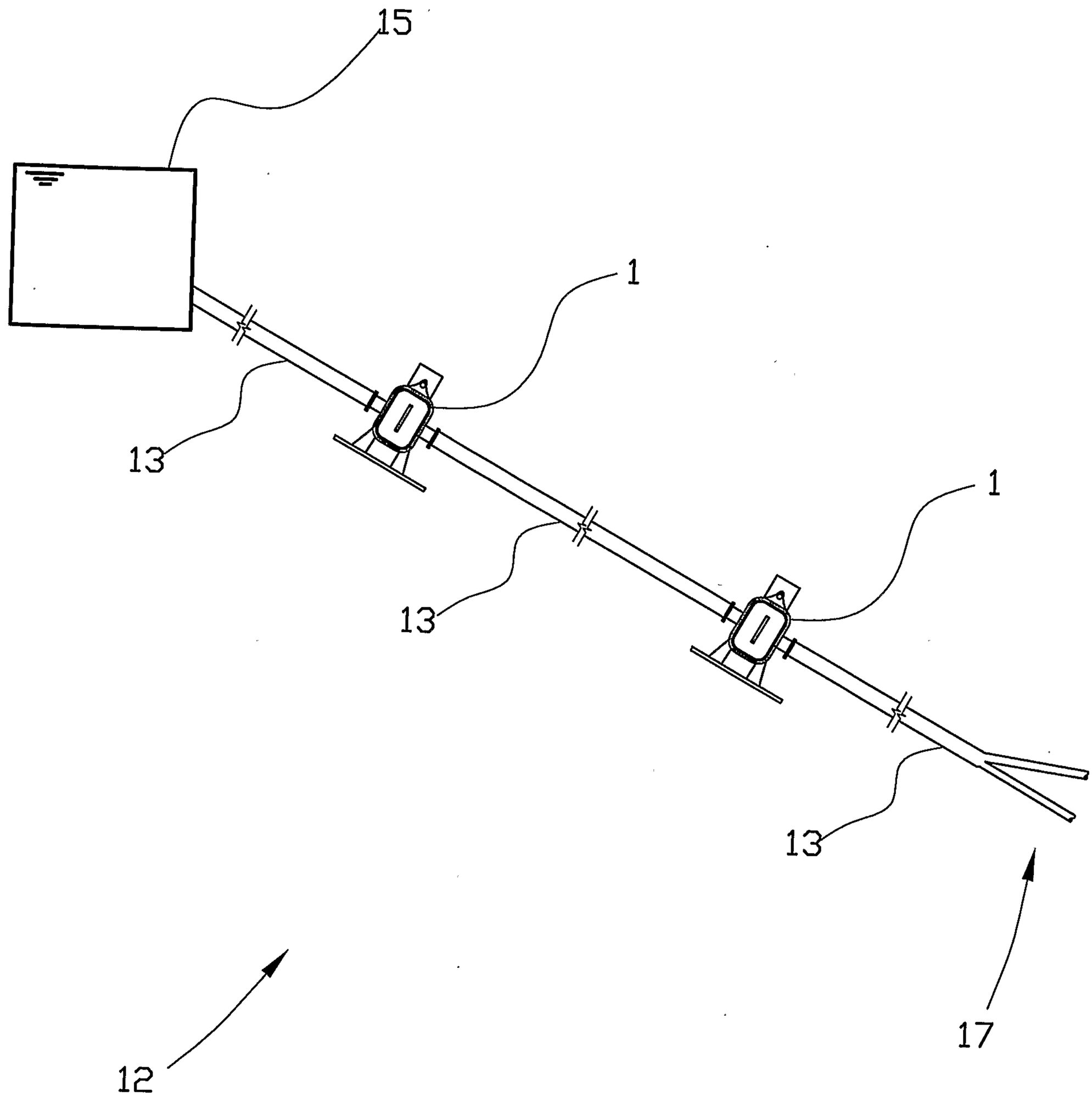

Fig. 7

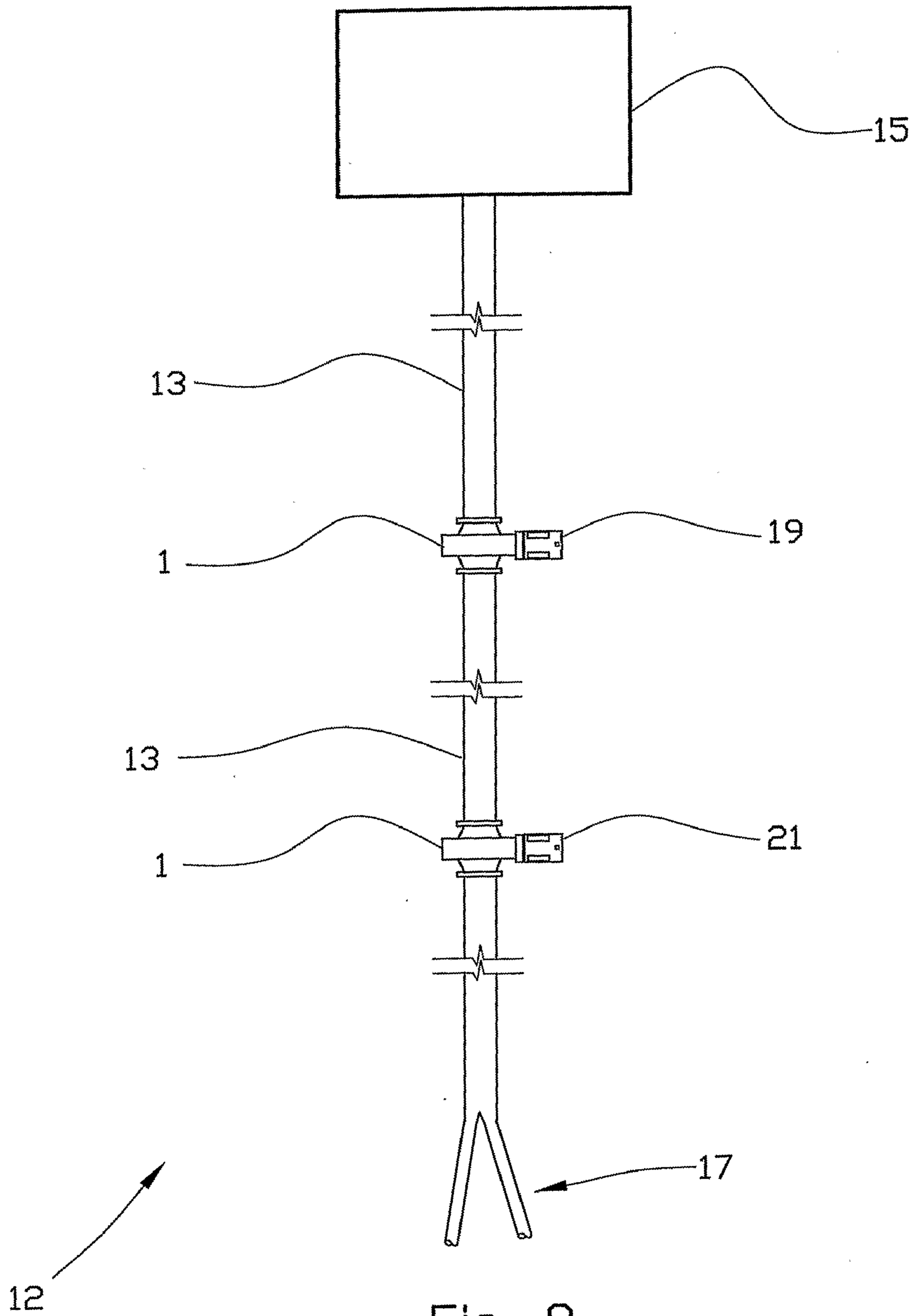

Fig. 8

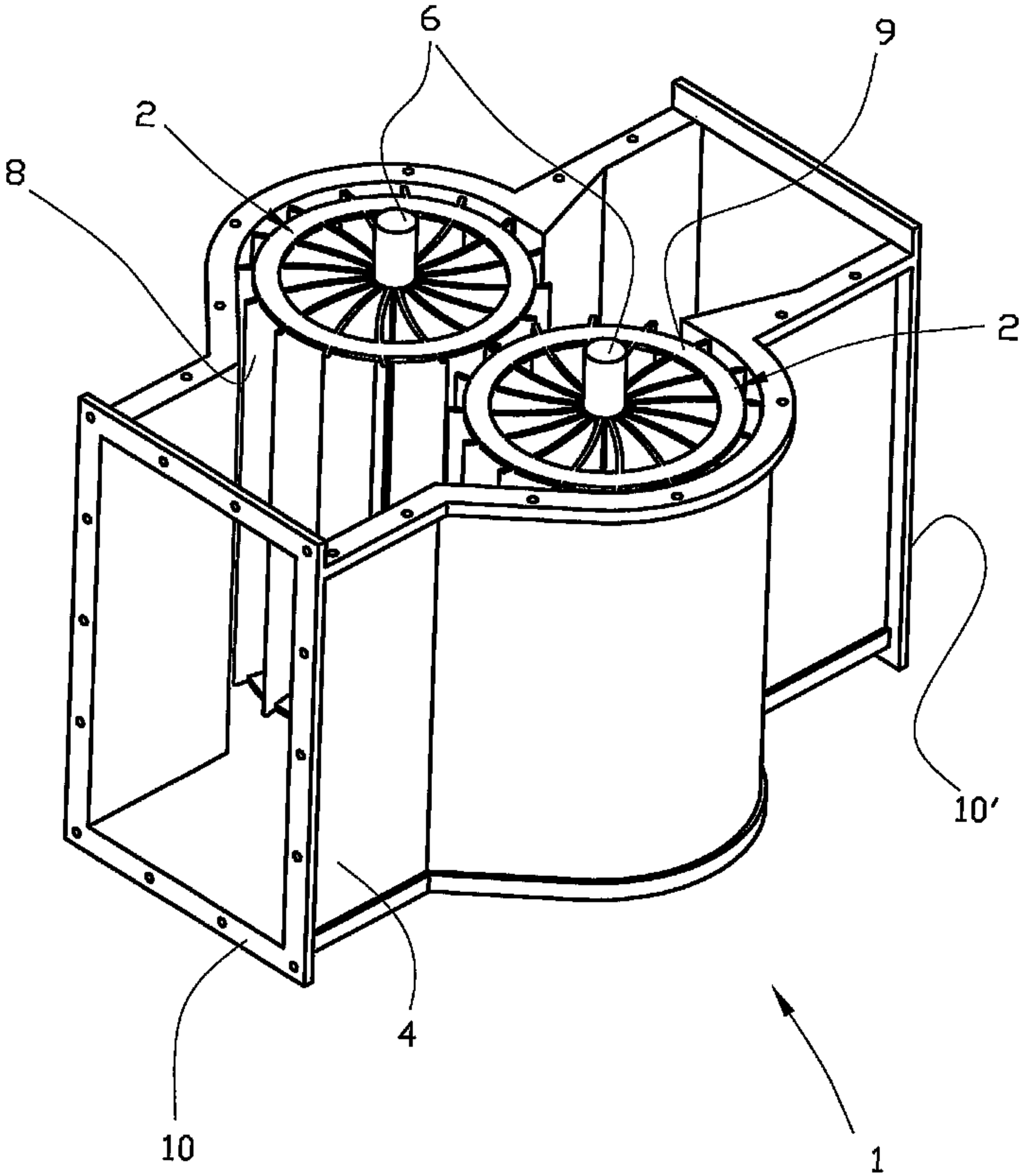
6
9
2
8
2
10'
4
10
1