(12) INTERNATIONAL APPLICATION PUBLISHED UNDER THE PATENT COOPERATION TREATY (PCT)

(19) World Intellectual Property Organization
International Bureau

(43) International Publication Date
28 September 2017 (28.09.2017)

WIPO | PCT

(10) International Publication Number
WO 2017/165682 Al

(51) International Patent Classification:
E21B 34/06 (2006.01) *E21B 17/00* (2006.01)
E21B 43/26 (2006.01)

(21) International Application Number:
PCT/US2017/023868

(22) International Filing Date:
23 March 2017 (23.03.2017)

(25) Filing Language: English

(26) Publication Language: English

(30) Priority Data:
15/080,152 24 March 2016 (24.03.2016) US

(71) Applicant: BAKER HUGHES INCORPORATED [US/US]; 17021 Aldine Westfield, Houston, TX 77073 (US).

(72) Inventor: ANDREW, Colin, P.; 12002 Fullers Grant Court, Cypress, TX 77433 (US).

(74) Agent: DUPHORNE, Darin, H.; Intellectual Counsel, Baker Hughes Incorporated, 17021 Aldine Westfield, Houston, TX 77073 (US).

(81) Designated States *(unless otherwise indicated, for every kind of national protection available):* AE, AG, AL, AM, AO, AT, AU, AZ, BA, BB, BG, BH, BN, BR, BW, BY, BZ, CA, CH, CL, CN, CO, CR, CU, CZ, DE, DJ, DK, DM, DO, DZ, EC, EE, EG, ES, FI, GB, GD, GE, GH, GM, GT, HN, HR, HU, ID, IL, IN, IR, IS, JP, KE, KG, KH, KN, KP, KR, KW, KZ, LA, LC, LK, LR, LS, LU, LY, MA, MD, ME, MG, MK, MN, MW, MX, MY, MZ, NA, NG, NI, NO, NZ, OM, PA, PE, PG, PH, PL, PT, QA, RO, RS, RU, RW, SA, SC, SD, SE, SG, SK, SL, SM, ST, SV, SY, TH, TJ, TM, TN, TR, TT, TZ, UA, UG, US, UZ, VC, VN, ZA, ZM, ZW.

(84) Designated States *(unless otherwise indicated, for every kind of regional protection available):* ARIPO (BW, GH, GM, KE, LR, LS, MW, MZ, NA, RW, SD, SL, ST, SZ, TZ, UG, ZM, ZW), Eurasian (AM, AZ, BY, KG, KZ, RU, TJ, TM), European (AL, AT, BE, BG, CH, CY, CZ, DE, DK, EE, ES, FI, FR, GB, GR, HR, HU, IE, IS, IT, LT, LU, LV, MC, MK, MT, NL, NO, PL, PT, RO, RS, SE, SI, SK, SM, TR), OAPI (BF, BJ, CF, CG, CI, CM, GA, GN, GQ, GW, KM, ML, MR, NE, SN, TD, TG).

Declarations under Rule 4.17:

— *as to applicant's entitlement to apply for and be granted a patent (Rule 4.17(H))*

— *as to the applicant's entitlement to claim the priority of the earlier application (Rule 4.17(in))*

Published:

— *with international search report (Art. 21(3))*

(54) Title: TREATMENT PORTED SUB AND METHOD OF USE

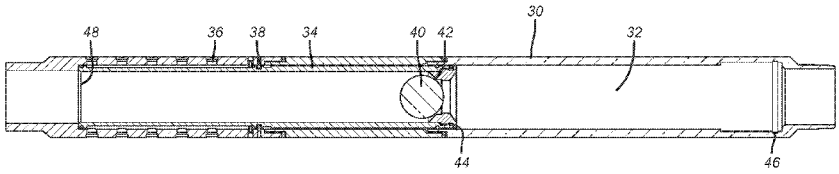

FIG. 2

(57) Abstract: A ported sub integrates a seat for an object to land on to allow pressure buildup. A sleeve shifts with the ball and the seat to open ports that are screened. The openings feature hardened inserts to control wear from high velocity fluid. The interval is treated through such openings with treatment fluid that is relatively free of solids. The formation is produced through the same screened inserts that were used for treating. The sleeve can be releasably retained in the ports open position and can optionally be closed with well intervention such as with a shifting tool. The object can pass through the seat after sleeve shifting by disintegration or by using a segmented seat that opens enough to allow the object to pass. An array can be spaced throughout the zone for treating or fracturing and the sleeves shifted bottom up using different or same sized balls.

WO 2017/165682 A1

TREATMENT PORTED SUB AND METHOD OF USE

Inventor: Colin P. Andrew

FIELD OF THE INVENTION

[0001] The field of the invention is ported subs and more particularly subs that can be actuated to open ports without intervention and releasably retain a cover sleeve with the ports open while further allowing opening of a passage therethrough without intervention.

BACKGROUND OF THE INVENTION

[0002] Typically for a multi-zone completion the casing has an array of valves for access to each zone. These valves are typically run in closed so that tubing pressure can be built up to set tools such as external packers. The valves have been single purpose in the past so that for treatment a sliding sleeve valve is shifted to open an unobstructed port through which treatment of the formation can take place. One such treatment is fracturing but others such as acidizing or stimulation can also take place through the unobstructed port. When the treatment is completed the treatment valve is closed and a production valve that has a screened opening is moved to an open position. Sometimes these two valves are integrated into a single sliding sleeve that is shifted with a shifting tool or some other well intervention tool into the treatment and then the production positions. The screened opening helps to retain solids produced from the formation from entering the production string.

[0003] The following references present a good background of the current state of the art: US 8342245; US 8127847; US2008/0296019; US 2009/0071655; US2009/0044944; US 8291982 and US2009/0056934. These designs either require well intervention or contemplate sleeve movement to open a single port. In a filing on September 3, 2015, a multi-sleeve design was described in US Serial Number 14/844897. This design is shown in FIG. 1. A housing **10** has a frac sleeve **12** that selectively uncovers ports **14** for fracturing after a ball **16** is dropped on a seat **18** to shift sleeve **12** to the position shown. Frac fluid with proppants is then delivered through ports **14** into the formation to enhance subsequent production. Thereafter, another ball **20** is landed on seat **22** to shift sleeve **24** to cover ports **14** and at the same time expose ports **26** for subsequent production or injection of clear fluids.

[0004] In situations where the treatment is to be with fluids without solids content the FIG. 1 design is simplified so that in a given increment of a zone to be treated a sleeve can be shifted without intervention to open a set of ports whose size and number are configured to meet local well conditions. The shifted position can be releasably maintained to hold the ports open. The movement preferably occurs with a seated ball that is part of the sleeve assembly. The ball can disintegrate or be blown through the seat as a result of sleeve shifting or with exposure to heat or fluids already in the borehole or added to the borehole. A shifting tool can later be used to return the sleeve to the position where the ports are again covered. These and other aspects of the present invention will become more apparent to those skilled in the art from a review of the description of the preferred embodiment and the associated drawing while appreciating that the full scope of the invention is to be determined from the appended claims.

SUMMARY OF THE INVENTION

[0005] A ported sub integrates a seat for an object to land on to allow pressure buildup. A sleeve shifts with the ball and the seat to open ports that are screened. The openings feature hardened inserts to control wear from high velocity fluid. The interval is treated through such openings with treatment fluid that is relatively free of solids. The formation is produced through the same screened inserts that were used for treating. The sleeve can be releasably retained in the ports open position and can optionally be closed with well intervention such as with a shifting tool. The object can pass through the seat after sleeve shifting by disintegration or by using a segmented seat that opens enough to allow the object to pass. An array can be spaced throughout the zone for treating or fracturing and the sleeves shifted bottom up using different or same sized balls.

BRIEF DESCRIPTION OF THE DRAWINGS

[0006] FIG. 1 is a section view of a two sleeve ported sub for fracturing with proppant and then treating;

[0007] FIG. 2 is a section view of a single sleeve ported sub for opening treatment ports with screened inserts into a formation.

DETAILED DESCRIPTION OF THE PREFERRED EMBODIMENT

[0008] Referring to FIG. 2, a housing 30 has a passage 32 therethrough. A sleeve 34 initially covers ports 36 and is pinned to housing 30 with one or more breakable members or shear pins 38. A ball 40 is dropped or pumped to seat 42 so that pressure can build to break the shear pin(s) 38 to allow a snap ring or other detent 44 to align with groove 46 to releasably hold the sleeve 34 in the shifted position with ports 36 open. A profile 48 is located adjacent an upper end of the sleeve 34 to allow a shifting tool that is not shown to grab the sleeve 34 when in its shifted position and return the sleeve 34 to the FIG. 2 initial position where the ports 36 are closed. This may need to be done if some parts of a zone are to either be treated or produced at a later time. Those skilled in the art will realize that in a zone to be fractured or treated there will be an array of devices as shown in FIG. 2 that can be sequentially operated. Preferably the order of operation will be bottom up using balls 40 of progressively increasing diameter. Alternatively the balls 40 can all be the same size if movement of sleeve 34 undermines seat 42 which can be made of segments so that the segments can move radially outwardly to let the ball 40 pass. Alternatively each of the balls can be configured to disintegrate with exposure to existing well fluids, added fluids or well thermal conditions. The balls can be made of a controlled electrolytic material (CEM) that can disintegrate under one of the above-mentioned conditions in the borehole. While a bottom up order of shifting sleeves 34 in the array of modules shown in FIG. 2 in a zone of interest other orders are contemplated.

[0009] At each module, one of which is shown in FIG. 2, the number, size and locations of the openings 36 can be different or the same depending on the adjacent borehole or formation conditions. The openings 36 preferably feature hardened or carbide inserts to protect the openings against the erosive force of high velocity fluids. The inserts also feature a screen so that subsequent to the treatment or fracturing therethrough, the production flow that ensues can be screened. In essence the array of openings 36 functions equivalently to a screen. The number and size of the openings 36 in each of the housings 30 in an interval can be different for the purpose of balancing production flow from the formation. Because the openings 36 are screened the fluid pumped through them is necessarily free of suspended solids that would otherwise clog the

screens in the openings 36. The configuration of FIG. 2 can eliminate the firac sleeve 12 of FIG. 1 because the use of treatment or firac fluid that has substantially no solids eliminates the need for large unscreened ports 14 typically used for firac fluid laden with proppants.

[0010] The seats 42 can also be made of a disintegrating material so that the drift diameter of the sleeve 34 is regained after shifting to allow for passage of tools therethrough for other treatment or drilling operations further downhole. If none of the sleeves 34 need to be closed after they are shifted then the process of opening all the ports 36 can be accomplished without intervention of well tools in the borehole.

[0011] The above description is illustrative of the preferred embodiment and many modifications may be made by those skilled in the art without departing from the invention whose scope is to be determined from the literal and equivalent scope of the claims below:

I claim:

1. A treatment assembly for borehole access to a surrounding formation, comprising:

at least one module comprising a housing (30) having a passage (32) therethrough and a movable sleeve (34) to selectively open at least one wall opening (36) without borehole intervention; **characterized by**

said wall opening (36) further comprising a screen.

2. The assembly of claim **1,** wherein:

said sleeve (34) comprising a seat (42) in said passage (32) to accept an object (40) thereon for selectively obstructing said passage (32) for pressure buildup to shift said sleeve (34) to selectively uncover said port.

3. The assembly of claim **2,** wherein:

said object (40) disintegrates to reopen said passage (32) after said sleeve (34) is shifted.

4. The assembly of claim **2,** wherein:

said seat (42) enlarges upon shifting said sleeve (34) to allow said object (40) to pass through said seat (42) to reopen said passage (32).

5. The assembly of claim **1,** wherein:

said opening (36) further comprises a screen.

6. The assembly of claim **1,** wherein:

said opening (36) comprises an hardened or carbide insert to resist erosion from flow therethrough.

7. The assembly of claim **1,** wherein:

said at least one module comprises a plurality of modules disposed in an interval of the formation wherein said at least one opening (36) in each said module comprises a plurality of openings wherein said plurality of openings (36) in said modules are the same or different in size or in number.

8. The assembly of claim 7, wherein:

said openings (36) comprise a screened for production from the formation after treatment therethrough into the formation.

9. The assembly of claim 7, wherein:

said modules balance flow from the formation passing through said openings (36) in said modules.

10. A treatment method for a producing zone accessible through a borehole, comprising;

providing a plurality of modules in a tubular string adjacent the producing zone; **characterized by**

applying pressure in said string for sequentially moving a sleeve (34) in said plurality of modules to open wall ports in said modules without borehole intervention;

sequentially pumping treatment fluid into said producing zone through said wall ports after each said sleeve (34) is moved.

11. The method of claim **10,** comprising:

providing a screen in said wall ports.

12. The method of claim **10,** comprising:

balancing production flow from the producing zone through said wall ports.

13. The method of claim **10,** comprising:

landing an object (40) on a seat (42) associated with said plurality of sleeves (34) to close a passage (32) therethrough;

applying pressure to said object (40) on said seat (42) to move said sleeve (34) to open said wall ports.

14. The method of claim **13,** comprising:

disintegrating the object (40) or passing the object (40) through said seat (42) after movement of said sleeve (34) to open said wall ports.

15. The method of claim **10,** comprising:

treating the producing zone and subsequently producing the producing zone through the same wall ports.

16. The method of claim **15,** comprising:

constructing said wall ports with hardened or carbide inserts with a screen in a flowpath therethrough.

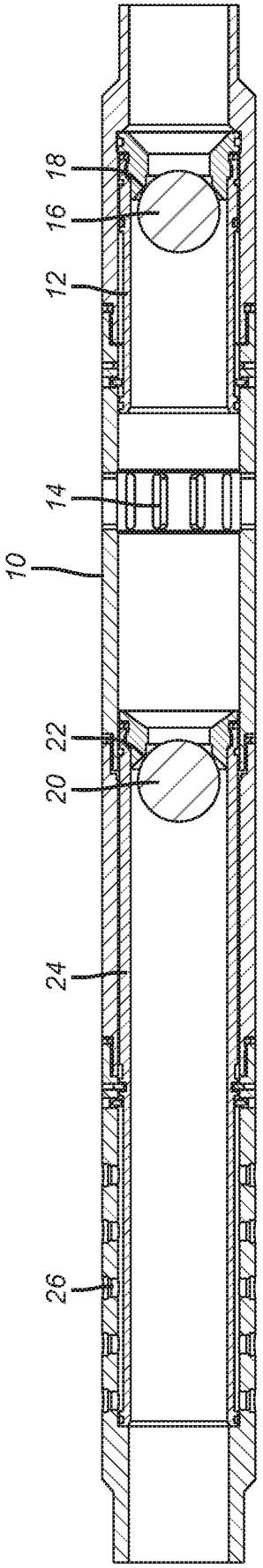

(PRIOR ART)
FIG. 1

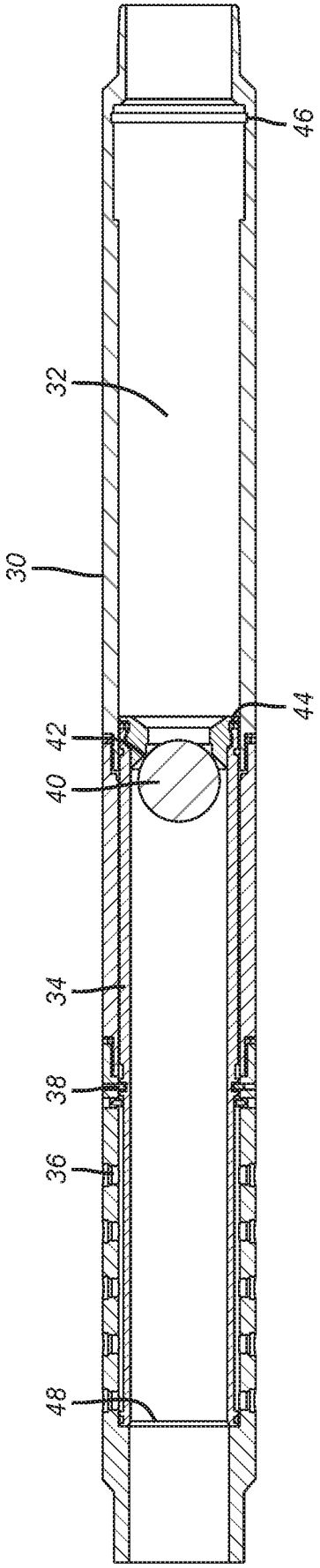

FIG. 2

INTERNATIONAL SEARCH REPORT

International application No.
PCT/US2017/023868

A. CLASSIFICATION OF SUBJECT MATTER

E21B 34/06(2006.01)i, E21B 43/26(2006.01)i, E21B 17/00(2006.01)i

According to International Patent Classification (IPC) or to both national classification and IPC

B. FIELDS SEARCHED

Minimum documentation searched (classification system followed by classification symbols)
E21B 34/06; E21B 43/14; E21B 33/12; E21B 34/12; E21B 43/26; E21B 34/14; E21B 34/10; E21B 17/00

Documentation searched other than minimum documentation to the extent that such documents are included in the fields searched
Korean utility models and applications for utility models
Japanese utility models and applications for utility models

Electronic data base consulted during the international search (name of data base and, where practicable, search terms used)
eKOMPASS(KIPO internal) & keywords: sleeve, opening, port, ball, seat, screen and intervention

C. DOCUMENTS CONSIDERED TO BE RELEVANT

Category*	Citation of document, with indication, where appropriate, of the relevant passages	Relevant to claim No.
X	US 2014-0262251 A1 (BAKER HUGHES INCORPORATED) 18 September 2014 See paragraphs [0017]-[0020], claims 1, 6 and figures 1, 3-6.	10,12,13,15,16
Y		1-9,11,14
Y	US 2009-0084553 A1 (RYTLEWSKI et al.) 02 April 2009 See paragraphs [0028]-[0032] and figures 2A-3C.	1-9,11
Y	US 2012-0181032 A1 (NAEDLER et al.) 19 July 2012 See claim 1.	3,14
A	US 2014-0166290 A1 (HALLIBURTON ENERGY SERVICES, INC.) 19 June 2014 See figure 3.	1-16
A	US 2013-0168099 A1 (THEMIG, DANIEL JON) 04 July 2013 See figures la-lc.	1-16

☐ Further documents are listed in the continuation of Box C.

☒ See patent family annex.

* Special categories of cited documents:
"A" document defining the general state of the art which is not considered to be of particular relevance
"E" earlier application or patent but published on or after the international filing date
"L" document which may throw doubts on priority claim(s) or which is cited to establish the publication date of another citation or other special reason (as specified)
"O" document referring to an oral disclosure, use, exhibition or other means
"P" document published prior to the international filing date but later than the priority date claimed
"T" later document published after the international filing date or priority date and not in conflict with the application but cited to understand the principle or theory underlying the invention
"X" document of particular relevance; the claimed invention cannot be considered novel or cannot be considered to involve an inventive step when the document is taken alone
"Y" document of particular relevance; the claimed invention cannot be considered to involve an inventive step when the document is combined with one or more other such documents,such combination being obvious to a person skilled in the art
"&" document member of the same patent family

Date of the actual completion of the international search	Date of mailing of the international search report
15 June 2017 (15.06.2017)	**15 June 2017 (15.06.2017)**

Name and mailing address of the ISA/KR	Authorized officer
International Application Division Korean Intellectual Property Office 189 Cheongsa-ro, Seo-gu, Daejeon, 35208, Republic of Korea	LEE, Hun Gil
Facsimile No. +82-42-481-8578	Telephone No. +82-42-481-8525

INTERNATIONAL SEARCH REPORT

Information on patent family members

International application No.

PCT/US2017/023868

Patent document cited in search report	Publication date	Patent family member(s)	Publication date
US 2014-0262251 Al	18/09/2014	US 9410411 B2	09/08/2016
US 2009-0084553 Al	02/04/2009	None	
US 2012-0181032 Al	19/07/2012	WO 2012-097235 Al	19/07/2012
US 2014-0166290 Al	19/06/2014	AU 2012-215163 B2	20/08/2015
		CA 2825355 Al	16/08/2012
		CA 2825355 C	26/04/2016
		CN 103477028 A	25/12/2013
		CN 103477028 B	16/11/2016
		CO 6761342 A2	30/09/2013
		EA 201391112 Al	31/03/2014
		EP 2673462 A2	18/12/2013
		MX 2013009194 A	31/01/2014
		MX 337279 B	23/02/2016
		US 2012-0205120 Al	16/08/2012
		US 8695710 B2	15/04/2014
		US 9458697 B2	04/10/2016
		WO 2012-107730 A2	16/08/2012
		WO 2012-107730 A3	28/02/2013
US 2013-0168099 Al	04/07/2013	AU 2011-305004 Al	04/04/2013
		BR 112013008040 A2	14/06/2016
		CA 2810412 Al	29/03/2012
		EP 2619404 Al	31/07/2013
		US 2016-0298424 Al	13/10/2016
		us 9187994 B2	17/11/2015
		wo 2012-037645 Al	29/03/2012