US0D1036638S

(12) United States Design Patent

Brown et al.

(10) Patent No.: US D1,036,638 S
(45) Date of Patent: ** Jul. 23, 2024

(54) **AIR FRESHENER**

(71) Applicant: **Fresh Products, Inc.**, Perrysburg, OH (US)

(72) Inventors: **Douglas S. Brown**, Toledo, OH (US); **Jeffrey A. Smith**, Perrysburg, OH (US)

(73) Assignee: **Fresh Products, Inc.**, Perrysburg, OH (US)

(**) Term: **15 Years**

(21) Appl. No.: **29/767,939**

(22) Filed: **Jan. 26, 2021**

Related U.S. Application Data

(62) Division of application No. 29/658,577, filed on Aug. 1, 2018, now Pat. No. Des. 912,794.

(51) **LOC (14) Cl.** **23-04**

(52) **U.S. Cl.**
USPC **D23/364**

(58) **Field of Classification Search**
USPC D23/355–366, 352, 369, 332, 333, 335, D23/336, 342, 351
CPC .. A61L 9/16; A61L 9/22; B01D 47/00; B01D 47/027; B01D 2221/02; B01D 2259/4508; B03C 3/155; B03C 3/368; F24F 3/16; F24F 13/20; F24F 13/28
See application file for complete search history.

(56) **References Cited**

U.S. PATENT DOCUMENTS

2,069,179	A	1/1937	Dunaway
2,243,151	A	5/1941	Fuld et al.
2,251,058	A	7/1941	Kirkman
2,642,310	A	6/1953	Meek et al.
2,657,090	A	10/1953	Meek
2,707,930	A	5/1955	Miles
2,794,676	A	6/1957	D'Agostino
2,908,473	A	10/1959	Snyder
2,925,202	A	2/1960	Stevens
3,104,816	A	9/1963	Jaffe
3,239,145	A	3/1966	Russo
3,269,605	A	8/1966	Silver
3,288,420	A	11/1966	Maruoka
3,375,538	A	4/1968	Mains et al.

(Continued)

FOREIGN PATENT DOCUMENTS

CH	296864	2/1954
DE	461572	6/1928

(Continued)

OTHER PUBLICATIONS

Advertisements dated Sep. 20, 1989 and Jan. 20, 1998 and updated advertising materials showing a combination soap and air freshener dispenser.

Primary Examiner — David G Muller
(74) *Attorney, Agent, or Firm* — KNOBBE, MARTENS, OLSON & BEAR, LLP

(57) **CLAIM**

The ornamental design for an air freshener, as shown and described.

DESCRIPTION

FIG. **1** is a front, top, and side perspective view of an air freshener embodying our new design.
FIG. **2** is a front view thereof.
FIG. **3** is a back view thereof.
FIG. **4** is a left side view thereof.
FIG. **5** is a right side view thereof.
FIG. **6** is a top view thereof.
FIG. **7** is a bottom view thereof; and,
FIG. **8** is a back, top, and side perspective view thereof.
Broken lines are used to illustrate features of the air freshener which form no part of the claimed design.

1 Claim, 7 Drawing Sheets

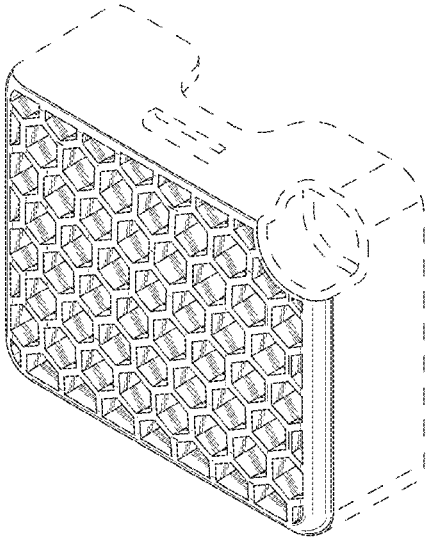

(56) **References Cited**

U.S. PATENT DOCUMENTS

3,380,632 A 4/1968 Wilson
3,522,935 A 8/1970 Lewis
3,729,553 A 4/1973 Gold et al.
3,833,149 A 9/1974 Iozzio
3,902,637 A 9/1975 Scheeler
3,993,444 A 11/1976 Brown
4,039,104 A 8/1977 Mijares, Jr. et al.
4,065,261 A 12/1977 Fukada
4,067,692 A 1/1978 Farris
4,154,375 A 5/1979 Bippus
4,252,547 A 2/1981 Johnson
4,294,778 A 10/1981 Deluca
4,570,827 A 2/1986 Roggenburg, Jr. et al.
4,580,581 A 4/1986 Reece et al.
4,636,328 A 1/1987 Flynn et al.
4,709,425 A 12/1987 Bavaveas
4,741,461 A 5/1988 Williamson et al.
4,743,406 A 5/1988 Steiner et al.
4,808,347 A 2/1989 Dawn
4,821,923 A 4/1989 Skorka
4,881,652 A 11/1989 Schiemann
4,903,584 A 2/1990 Styles
4,905,112 A 2/1990 Rhodes
4,921,131 A 5/1990 Binderbauer et al.
4,921,636 A 5/1990 Traas
4,946,070 A 8/1990 Albert et al.
4,946,072 A 8/1990 Albert et al.
4,955,508 A 9/1990 Campanna et al.
4,967,935 A 11/1990 Celest
RE33,864 E 3/1992 Steiner et al.
5,102,015 A 4/1992 Barnard et al.
5,115,945 A 5/1992 Ruck
5,147,582 A 9/1992 Holzner, Sr. et al.
5,165,603 A 11/1992 Hahn
5,167,877 A 12/1992 Pai
5,178,327 A 1/1993 Palamand et al.
5,180,107 A 1/1993 Lindauer
5,186,360 A 2/1993 Mease et al.
5,223,182 A 6/1993 Steiner et al.
5,265,772 A 11/1993 Bartasevich et al.
5,284,272 A 2/1994 Wei
5,367,716 A 11/1994 Huang
5,379,917 A 1/1995 Brown et al.
5,477,640 A 12/1995 Holtkamp, Jr.
5,487,877 A 1/1996 Choi
5,595,324 A 1/1997 Brown et al.
5,690,255 A 11/1997 White
5,695,692 A 12/1997 Kennedy
5,791,525 A 8/1998 Fan
5,799,826 A 9/1998 Brown et al.
5,805,768 A 9/1998 Schwartz et al.
5,842,675 A 12/1998 Davitt
5,911,362 A 6/1999 Wood et al.
D414,253 S 9/1999 Kobayashi et al.
6,062,425 A 5/2000 Brown et al.
6,249,919 B1 6/2001 Bryson, Jr. et al.
6,254,065 B1 7/2001 Ehrensperger et al.
6,318,600 B1 11/2001 Winnett et al.
6,357,726 B1 3/2002 Watkins
D459,950 S 7/2002 Bush et al.
6,536,746 B2 3/2003 Watkins
6,569,387 B1 5/2003 Furner et al.
6,581,915 B2 6/2003 Bartsch et al.
6,619,559 B2 9/2003 Wohrle
6,655,604 B2 12/2003 Tuttobene, Jr.
6,713,024 B1 3/2004 Arnell et al.
6,769,631 B2 8/2004 Brown
6,783,117 B2 8/2004 Wohrle
6,786,474 B2 9/2004 Watkins et al.
6,834,847 B2 12/2004 Bartsch et al.
6,913,733 B2 7/2005 Hardy et al.
6,994,328 B2 2/2006 Watkins et al.
7,011,795 B2 3/2006 Thompson et al.
7,036,800 B2 5/2006 Ellis
7,070,172 B2 7/2006 Fabrega et al.
7,160,515 B2 1/2007 Murdell et al.
7,188,780 B2 3/2007 Martens, III
7,188,783 B2 3/2007 Ivey et al.
7,223,361 B2 5/2007 Kvietok et al.
7,344,123 B2 3/2008 Pankhurst et al.
D570,464 S * 6/2008 Normark D23/364
7,389,943 B2 6/2008 Jaworski
7,484,716 B2 2/2009 Ford Morie et al.
7,600,697 B2 10/2009 Bankers et al.
7,610,118 B2 10/2009 Schramm et al.
7,622,073 B2 11/2009 Schramm et al.
D606,642 S * 12/2009 Weggelaar D23/366
7,691,336 B2 4/2010 Westring
D618,328 S * 6/2010 Chan D23/364
7,748,687 B2 7/2010 Pankhurst et al.
7,857,236 B2 12/2010 Zlotnik et al.
7,922,104 B2 4/2011 Zlotnik et al.
7,942,388 B2 5/2011 Suissa et al.
7,981,367 B2 7/2011 Kvietok et al.
8,016,207 B2 9/2011 Kvietok et al.
8,048,379 B2 11/2011 Sassoon
8,061,628 B1 11/2011 Kvietok et al.
8,074,970 B2 12/2011 Pankhurst et al.
8,119,064 B2 2/2012 Woo et al.
D664,246 S 7/2012 Irvin et al.
8,210,448 B2 7/2012 Kvietok et al.
8,220,782 B2 7/2012 Hepple
8,349,251 B2 1/2013 Woo et al.
8,414,834 B2 4/2013 Gorman
8,469,293 B2 6/2013 Doty et al.
8,485,454 B1 7/2013 Irvin et al.
8,603,397 B2 12/2013 Gruenbacher et al.
8,870,165 B2 10/2014 Scolari
8,881,999 B2 11/2014 Blaylock et al.
8,899,493 B2 12/2014 Kim et al.
9,265,853 B2 2/2016 Scott et al.
D753,809 S 4/2016 Schlegel
D754,317 S 4/2016 Yasuoka
9,364,575 B2 6/2016 Habbel
D764,040 S * 8/2016 Cho D23/365
D784,504 S * 4/2017 Kim D23/351
D784,506 S * 4/2017 Kim D23/351
D784,507 S * 4/2017 Kim D23/351
9,717,815 B2 8/2017 Peterson et al.
D798,430 S * 9/2017 Nord D23/364
D804,005 S * 11/2017 Spear D23/365
D831,186 S * 10/2018 Tamras D23/366
D837,355 S * 1/2019 Gunnefur D23/364
D858,727 S * 9/2019 Uchiyama D23/335
D858,732 S * 9/2019 Hyon A61L 9/00 D23/356
2002/0066798 A1 6/2002 Laudamiel-Pellet et al.
2002/0068009 A1 6/2002 Laudamiel-Pellet et al.
2002/0068010 A1 6/2002 Laudamiel-Pellet et al.
2003/0175148 A1 9/2003 Kvietok et al.
2004/0007787 A1 1/2004 Kvietok et al.
2004/0033171 A1 2/2004 Kvietok et al.
2004/0265164 A1 12/2004 Woo et al.
2005/0147523 A1 7/2005 Laudamiel-Pellet et al.
2005/0147539 A1 7/2005 Laudamiel-Pellet et al.
2005/0214158 A1 9/2005 Kvietok
2005/0265904 A1 12/2005 Hardy et al.
2006/0067859 A1 3/2006 Laudamiel-Pellet et al.
2006/0081721 A1 4/2006 Caserta et al.
2006/0153744 A1 7/2006 Thompson et al.
2006/0196100 A1 9/2006 Laudamiel-Pellet et al.
2006/0226251 A1 10/2006 Helf et al.
2007/0181706 A1 8/2007 Yeh et al.
2008/0038156 A1 2/2008 Jaramillo
2008/0164337 A1 7/2008 Brown et al.
2008/0191370 A1 8/2008 Pankhurst et al.
2008/0245890 A1 10/2008 Lockwood et al.
2009/0001213 A1 1/2009 Looft
2009/0173799 A1 7/2009 Litten-Brown et al.
2009/0200399 A1 8/2009 McGee et al.
2009/0212124 A1 8/2009 Kenny
2009/0218413 A1 9/2009 Withers
2010/0038443 A1 2/2010 Pankhurst et al.
2010/0090022 A1 4/2010 Hayashida

(56) **References Cited**

U.S. PATENT DOCUMENTS

2010/0187327	A1	7/2010	Irvin
2010/0221143	A1	9/2010	Broncano Atencia et al.
2010/0272599	A1	10/2010	Broncano Atencia et al.
2010/0320282	A1	12/2010	Sissom
2011/0290903	A1	12/2011	Nagano et al.
2012/0000989	A1	1/2012	Bordier
2012/0018527	A1	1/2012	Duddington et al.
2012/0126024	A1	5/2012	Boyd et al.
2012/0205460	A1	8/2012	Franks
2014/0001286	A1	1/2014	Scott et al.
2015/0108243	A1	4/2015	Bourne
2017/0067608	A1	3/2017	Patton
2017/0216474	A1	8/2017	Kelsen

FOREIGN PATENT DOCUMENTS

DE	3239511	4/1984
DE	102012016994	3/2013
FR	2741807	6/1997
WO	WO 00/12143	3/2000
WO	WO 02/34414	5/2002

* cited by examiner

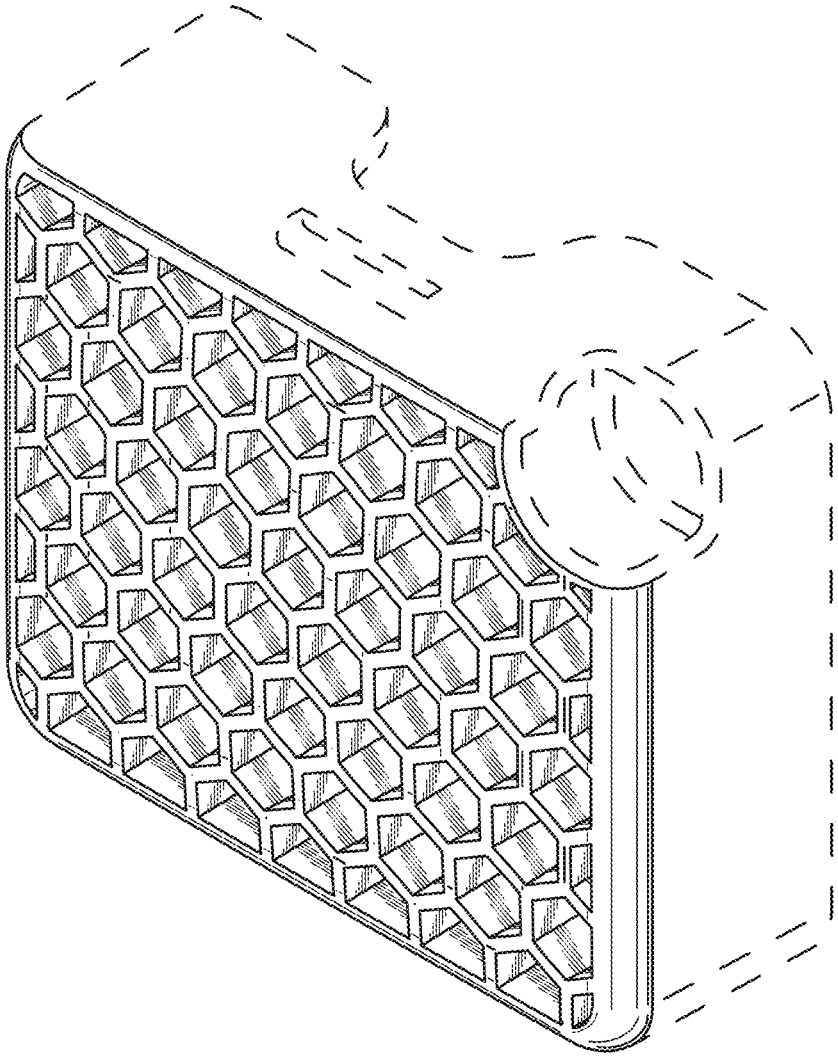

FIG. 1

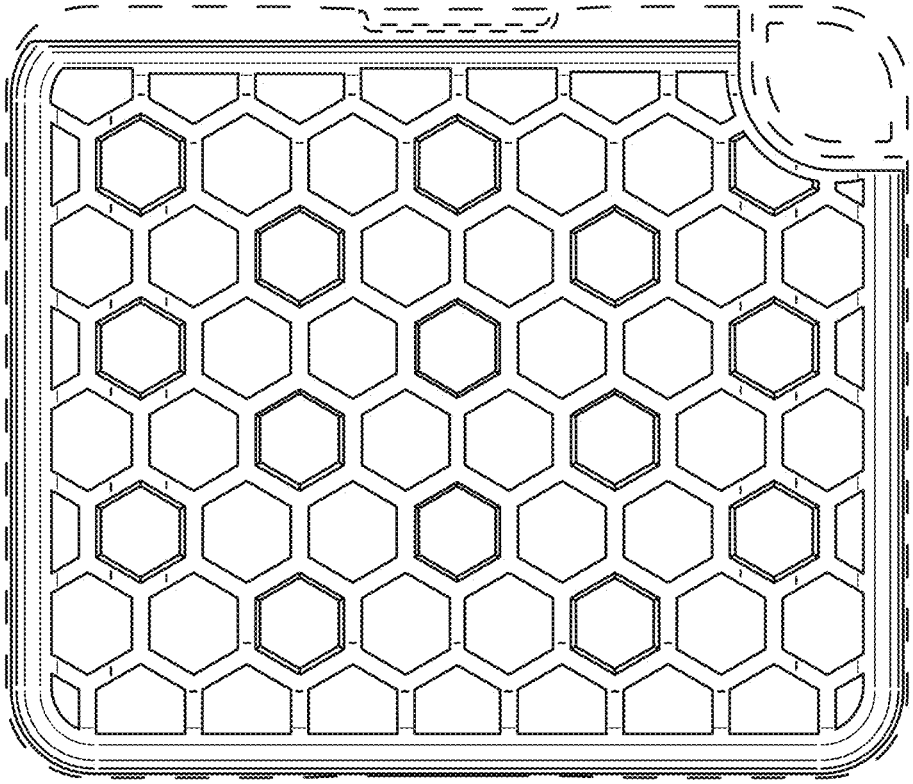

FIG. 2

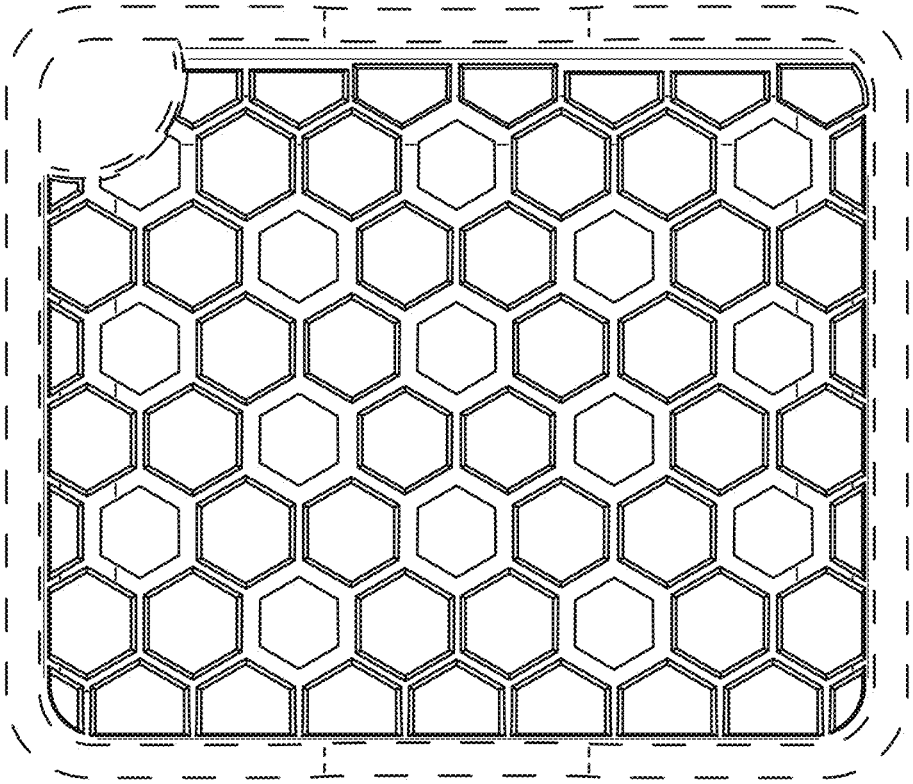

FIG. 3

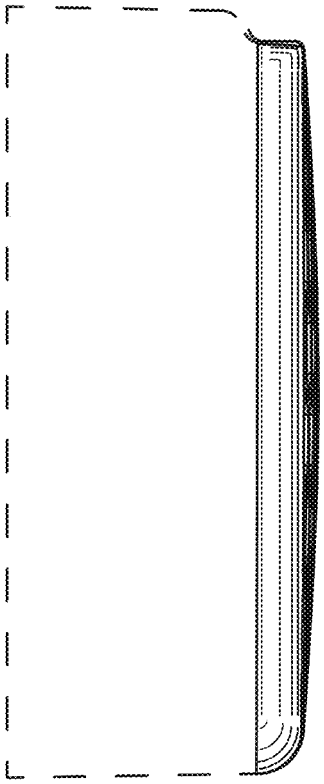

FIG. 4

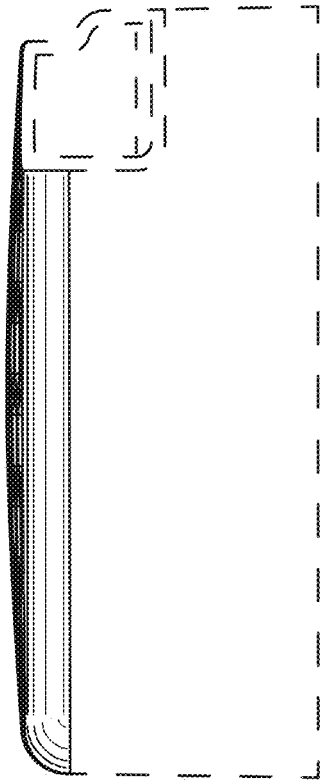

FIG. 5

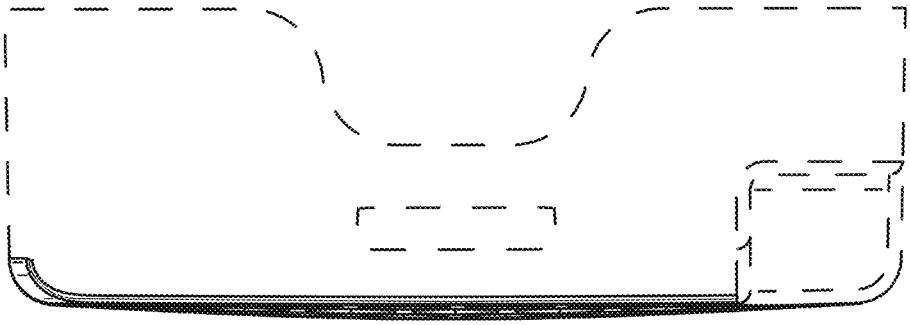

FIG. 6

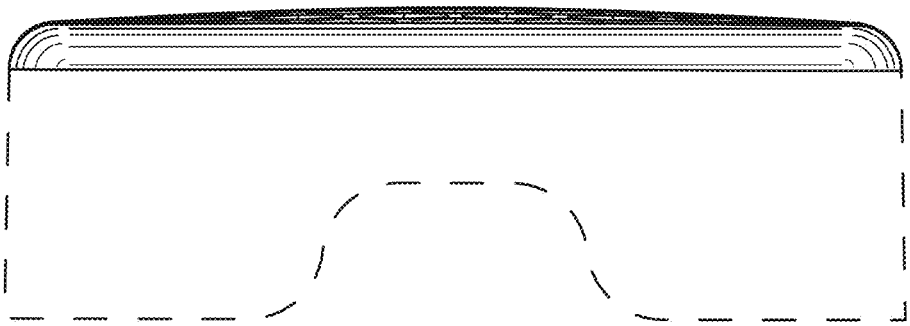

FIG. 7

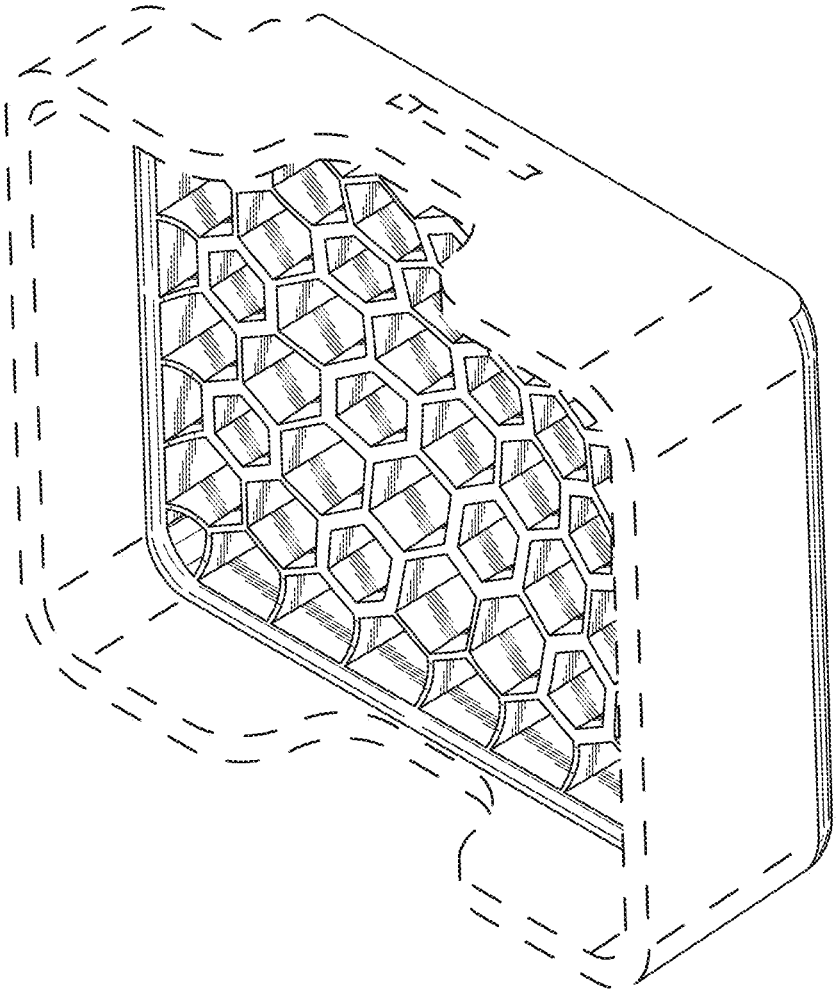

FIG. 8