Sept. 15, 1936. W. M. VOGEL 2,054,106

SPRAYING DEVICE

Filed Nov. 9, 1935

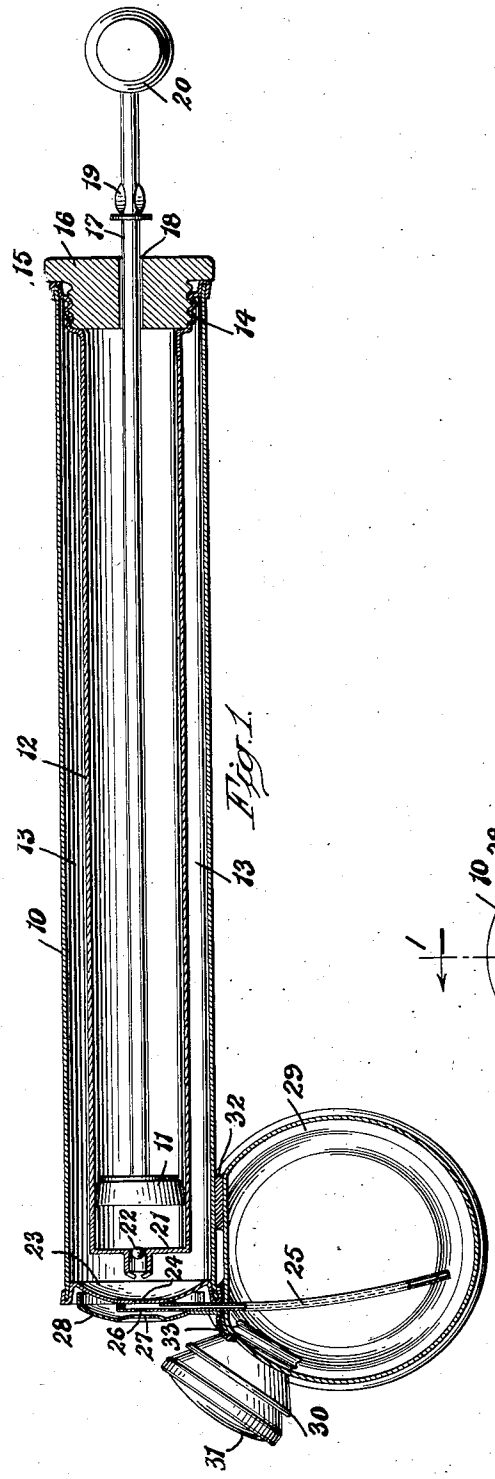

Fig. 1.

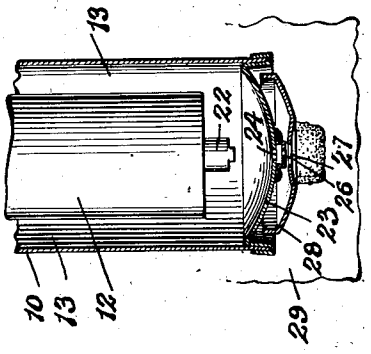

Fig. 3.

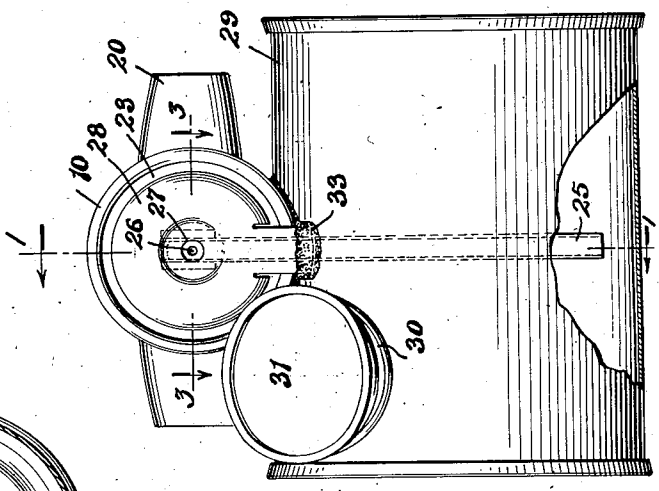

Fig. 2.

INVENTOR

William Martin Vogel

BY

Harry Razinsky

ATTORNEY

Patented Sept. 15, 1936 2,054,106

UNITED STATES PATENT OFFICE

2,054,106

SPRAYING DEVICE

William Martin Vogel, Bloomfield, N. J.

Application November 9, 1935, Serial No. 48,970

6 Claims. (Cl. 299—88)

This invention relates to hand-operated sprayers or atomizers used for distributing liquid insecticides or other liquids, and the invention has for its object the provision of an improved construction enabling better, more effective and positive results than procured with the types of devices now employed for the purpose.

A particular object of the invention is in the provision of means whereby a continuous, finely diffused spray may be projected from the device with a minimum of pumping effort on the part of the operator. I obtain this result by the use of a relatively small diameter piston and a small diameter piston chamber in co-operation with the use of a relatively large compression chamber for holding a maximum of air pressure produced by the operation of the piston.

These and other features possessed by the device render it highly efficient and exceptionally easy to operate.

In the accompanying drawing wherein a preferred embodiment of the invention is shown, Fig. 1 is a longitudinal sectional view through the device on the line 1—1 of Fig. 2, looking in the direction of the arrows; Fig. 2 is a front, elevational view thereof on a larger scale, with parts broken away; and Fig. 3 is a sectional view on the line 3—3 of Fig. 2, looking in the direction of the arrows.

In the drawing, 10 indicates an elongated cylinder forming the compression chamber. Located concentrically within the cylinder is an elongated piston chamber 12 within which the piston 11 is slidable, the piston being secured at one end of the piston rod 17. Rod 17 is provided at its opposite end with an operating handle 20 of conventional form, and also is provided with a stop member 19 to limit the inward projection of piston 11 within chamber 12.

Piston chamber 12 is of considerably less diameter than the cylinder 10 whereby an annular compression chamber 13 is formed between the outer face of the compression chamber 12 and the inner face of the cylinder 10. This compression chamber is thus of substantial capacity, and permits the storing of a relatively large amount of air under pressure whereby a continuous spray is provided by leisurely backward and forward piston operation. At its inner closed end 21, the piston chamber is provided with a check valve 22 of conventional construction. The opposite end of piston chamber 12 is flared outwardly and has its end fitted over the edge of cylinder 10 as shown at 15 and is secured thereto by soldering or otherwise. The flared portion of piston chamber 12 thus serves to close one end of the annular air compression chamber 13 and is internally threaded, as shown at 14, for the reception of a threaded closure plug 16, said plug having a central aperture 18 through which the piston rod 17 is slidable. At the opposite end of cylinder 10 a cap 23 is secured, said cap being provided with a central hole or opening 24, in registration with a similar hole 26 of smaller diameter provided near the upper closed end of a flat suction tube 25 which projects down into the cylindrical fluid receptacle 29 attached transversely of cylinder 10 by means of solder 32 or other fastening means. An outer cap 28 is positioned over the upper closed end of tube 25 and over the inner cap 23. Said outer cap 23 is provided with a relatively large hole or aperture 27, in registration with the holes 26 and 24 in tube 25 and inner cap 23 respectively. Cap 28 is secured in position by the solder 33 or by other suitable means. Fluid receptacle 29 is provided with a filler neck 30 wherein a closure plug 31 is screw-threaded so that it may be removed when the receptacle is being replenished with insecticide or other liquid.

It will be noted that the diameter of the piston 11 is, according to the present invention, relatively small so that a minimum of manual effort is required to reciprocate the piston within the piston chamber 12. At the same time, the compression chamber 13, consisting of the annular space located between the piston chamber 12 and cylinder 10, as well as the space located between the end 21 of the piston chamber and inner cap 23 is substantially large, so that a great deal of air under compression, can be produced within this compression chamber by leisurely or slow strokes of the piston. The result is that by slowly moving the piston back and forth within its chamber 12, a continuous spray of fine mist or vapor is projected out of the aligned openings 24, 26 and 27. At the same time, the size of the entire device is maintained within the usual limits for spray devices of this character.

What I claim is:

1. A sprayer of the character described comprising, an elongated cylindrical outer casing, an inner elongated tubular piston chamber concentrically located within the outer casing and having its side wall spaced therefrom to provide an annular air compression chamber between the piston chamber and the outer casing, one end of the piston chamber having an end wall provided with a check valve, the other end of the piston chamber being flared and connected to the end of

the outer casing, said flared portion closing one end of the air compression chamber and being threaded, a closure plug received in said threaded portion and a piston movable in the piston chamber.

2. A sprayer of the character described comprising, a pair of cylindrical concentrically disposed tubular members, the inner member thereof constituting a piston chamber, a piston movable therein, the inner member being spaced from the outer member to provide an annular air compression chamber between the members, the inner member being shorter than the outer member and having a closed end wall located at a distance from one end of the outer member, a check valve carried by said end wall, the opposite end of the inner member being attached to the end of the outer member and serving thereby to close one end of the air compression chamber, a cap at the opposite end of the outer member formed with a spray opening, a fluid container attached to the outer member, a perforated spray tube attached to the cap and extending into the fluid container and a perforated outer cap located in front of and spaced from the perforated portion of the spray tube.

3. A sprayer of the character described comprising, a cylindrical outer casing, a fluid container attached thereto, a suction tube projecting from inside of the container to a position at one end of the casing, the end of the casing and the suction tube being provided with aligned spray openings, a cap located over and spaced from the end of the suction tube, said cap having an opening disposed in registration with the opening in the tube, a piston chamber located within and surrounded by the casing, said piston chamber being of less diameter than the internal diameter of the casing whereby an annular air compression chamber is provided between the piston chamber and the casing, one end of the piston chamber being flared outwardly to close one end of said air compression chamber, the end of said flared portion terminating in a flange bent over the end of the outer casing.

4. A sprayer of the character described comprising, an elongated outer casing, an inner concentrically located piston chamber of less diameter than the outer casing whereby an annular air compression chamber is provided between the outer casing and the piston chamber, said piston chamber having an internally threaded flared end extending outwardly to meet the end of the outer casing and bent over the same, said flared end solely supporting the piston chamber within the outer casing.

5. A sprayer of the character described comprising, a pair of cylindrical concentrically disposed tubular members, the inner member thereof constituting a piston chamber, a piston movable therein, the inner member being spaced from the outer member to provide an air compression chamber between the members, the end of both members at one end of the sprayer meeting and united by a bent-over flange on one member extending over the end of the other, the inner member being internally threaded adjacent to the bent-over flange, a plug received in said threaded portion and provided with a part received against the bent-over flange.

6. A sprayer of the character described comprising an outer casing, an inner concentrically located piston chamber of less diameter than the outer casing whereby an annular air compression chamber is provided between the outer casing and the piston chamber, a fluid container attached to the outer casing, a cap at one end of the outer casing formed with a spray opening, a perforated spray tube attached to the cap and extending into the fluid container, said spray tube having diametrically opposite perforations in its walls extending transversely of its axis and aligned with the perforation in the cap, and a perforated outer cap located in front of and spaced from the perforated portion of the spray tube.

WILLIAM MARTIN VOGEL.