Office de la Propriété Intellectuelle du Canada
Un organisme d'Industrie Canada

Canadian Intellectual Property Office
An agency of Industry Canada

CA 2277413 C 2004/01/20

(11)(21) 2 277 413

(12) BREVET CANADIEN
CANADIAN PATENT

(13) C

(22) Date de dépôt/Filing Date: 1999/07/09

(41) Mise à la disp. pub./Open to Public Insp.: 2000/01/11

(45) Date de délivrance/Issue Date: 2004/01/20

(30) Priorité/Priority: 1998/07/11 (P 19831158.3) DE

(51) Cl.Int.^{6}/Int.Cl.^{6} F16F 15/30

(72) Inventeurs/Inventors:
ECKEL, HANS-GERD, DE;
WEISS, LYDIA, DE

(73) Propriétaire/Owner:
CARL FREUDENBERG KG, DE

(74) Agent: BORDEN LADNER GERVAIS LLP

(54) Titre : VOLANT
(54) Title: FLY WHEEL

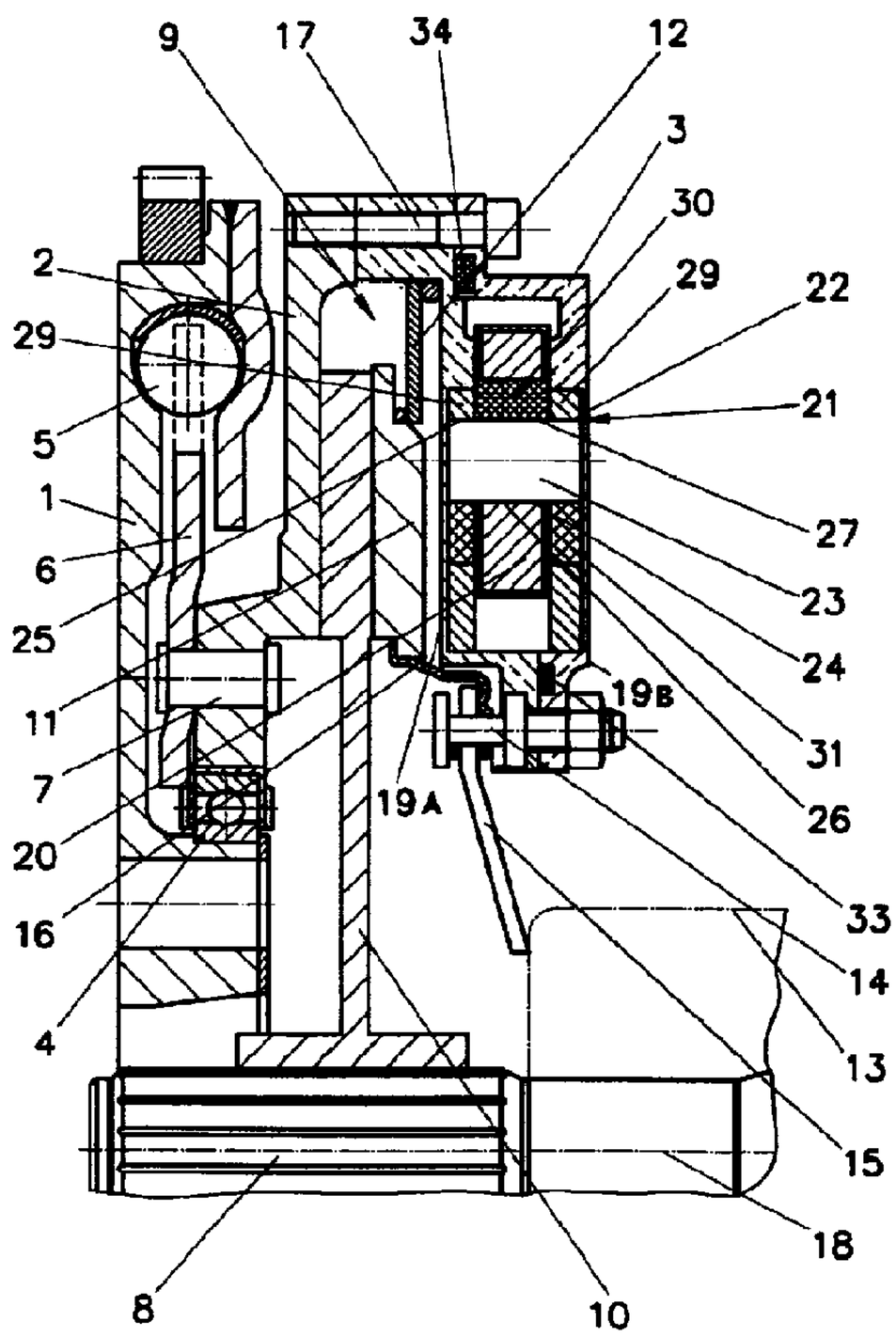

(57) Abrégé/Abstract:
Fly wheel including a first fly ring connectable with a drive shaft and a second fly ring connectable with an output shaft, whereby the first and second fly rings are connected to be rotatable relative to one another and concentrical, and whereby a torsion spring is provided between the first and second fly rings for the suppression of rotation vibrations. A rotation speed dependent

CA 2277413 C 2004/01/20

(11)(21) 2 277 413

(13) C

(57) Abrégé(suite)/Abstract(continued):
damper is connected with the second fly ring which includes at least one hub part rotatable about an axis of rotation as well as several damper masses which are pivotable at least in circumferential direction about pivot axes spaced apart from the axis of rotation. The damper provides for a reduction of the fly wheel weight and, thus, the construction of a drive train of reduced weight.

ABSTRACT

Fly wheel including a first fly ring connectable with a drive shaft and a second fly ring connectable with an output shaft, whereby the first and second fly rings are connected to be rotatable relative to one another and concentrical, and whereby a torsion spring is provided between the first and second fly rings for the suppression of rotation vibrations. A rotation speed dependent damper is connected with the second fly ring which includes at least one hub part rotatable about an axis of rotation as well as several damper masses which are pivotable at least in circumferential direction about pivot axes spaced apart from the axis of rotation. The damper provides for a reduction of the fly wheel weight and, thus, the construction of a drive train of reduced weight. (Figure 1)

FLY WHEEL

Field of the Invention

The present invention relates to a fly wheel including a first fly ring connectable with a drive shaft and a second fly ring connectable with a driven shaft, whereby the first and second fly rings are relatively mutually rotatable and concentrically supported one in the other, and whereby a torsion spring is provided between the first and second fly rings for the damping of rotary vibrations.

Background Art

Such a fly wheel is known from German Patent No. DE 36 21 997 A1. A fly wheel separated into two parts, which is also referred to as dual mass fly wheel, is used for the insulation of vibrations, for example, in the drive train of a motor vehicle.

It is a disadvantage of the fly wheel known from DE 36 21 997 A1 that it has a high weight which is essentially caused by the two fly rings. In order that a good vibration insulation is achieved with a dual mass fly wheel, the second fly ring positioned towards the transmission is significantly heavier than the engine-side first fly ring.

A speed dependent vibration damper is known from DE 196 31 989 C1. It includes a hub part and a plurality of circumferentially adjacent inertia masses that are each respectively supported by a pair of circumferentially adjacent mounts. The mounts include bolts that roll along oppositely curved tracks in the inertia mass elements and the hub part so that, upon introduction of rotary vibrations superimposed to the rotary movement, a reduction of the distance of the inertia mass elements from the axis, is achieved along the path of the curved tracks.

Summary of the Invention

It is an object of the invention to provide a dual mass fly wheel of reduced weight and especially to provide a fly wheel which permits the construction of a drive train of reduced weight.

This object is achieved in a fly wheel of the above-described generic type by providing a speed dependent damper on the second fly ring which includes at least one hub part rotatable around the axis of rotation, as well as several damper masses which can swivel at least in circumferential direction around a swivel axis spaced apart from the axis rotation.

Rotation vibrations which appear superimposed to the rotation movement on axes of periodically operating machines, for example, on the crank shaft of an internal combustion engine, can be reduced with the rotation speed dependent damper provided on the second fly ring. A damper is designated rotation speed dependent if it can dampen the rotation vibrations over a large range of rotation speeds, ideally over the complete range of rotation speeds of the machine. It is a principle of the damper that the damper masses due to the centrifugal force tend to circle the axis at the largest possible distance upon introduction of a rotation movement. Rotation vibrations which are superimposed on the rotation movement lead to a relative movement of the damper masses in radial direction inward which is used for vibration compensation. The vibration damper has a specific frequency which is proportional to the rotation speed so that rotation vibrations with frequencies which are proportional to the rotation speed can be dampened over a large range of rotation speeds.

It is has been discovered by the inventors that surprisingly the positioning of a rotation speed dependent damper in a dual mass fly wheel, for example, on the second fly ring of the fly wheel allows the possibility of constructing the fly wheel significantly lighter than before. The achievable weight reduction is essentially based on the fact that with the arrangement in accordance with the invention an improvement in the vibration behaviour can be achieved even with a second fly ring which is made significantly lighter. However, in view of other technical requirements, for example, for reasons of heat storage and heat dissipation, it is not possible to arbitrarily reduce the mass of the second fly ring. Suitable fly ring masses will be readily apparent to the art-skilled person.

It is a further advantage of the invention that other materials than those commonly employed can be used for the manufacture of the second fly ring. For example, by making the second fly ring of sheet metal, the weight and the manufacturing costs of the fly wheel can both be reduced.

The fly wheel with damper is preferably mounted on the power output side of an engine or motor. A good vibration damping is achieved by mounting the damper on the forward end of the fly wheel which end is on the power output side of the fly wheel.

An especially compact and space-saving construction is achieved by mounting a clutch disk with pressure plate between the second fly ring and the damper. The construction can be further simplified by using a pressure spring which is supported by the damper and pushes against the pressure plate.

In accordance with a preferred embodiment, each damping mass is supported in the hub part by a pair of circumferentially spaced apart bolts which extend parallel to the axis of rotation, and roll along first and second curved tracks. The first tracks provided in the hub part have a U-shaped profile opening in direction of the axis of rotation, and the second tracks provided in the damping mass have a U-shaped profile opening in the opposite direction. The bolts on the sides respectively remote from the curved tracks, are guided by a guide track. By supporting the damping masses on bolts which roll along curved tracks of the hub part and the damping masses, an especially simple and stable construction is achieved.

The noise characteristics of the fly wheel are improved by constructing the guide track as a damping layer consisting of polymeric material.

The damping is then especially good when the damping layer consists of an elastomeric material.

The damping layer in circumferential direction preferably ends in stop surfaces which limit the rotation of the bolts to a preselected range.

The manufacture can be simplified and the associated cost reduced by constructing the curved tracks as part of insert parts for the damping masses.

The insert parts and the damping layers are preferably part of inserts which are rigidly received in cutouts of the hub part and the damping masses.

The manufacture can be further simplified by connecting the material of the damping layer with the inserts after installation of the inserts in the cutouts by directly forming the material of the damping layer onto and solidifying it on the cutouts and the inserts.

Strict manufacturing tolerances need not be observed, when a gap is present between the damper mass or the hub and the inserts, and the gap is filled with the material of the damping layer so that the latter forms a tolerance compensation layer.

When the tolerance compensation layer and the damping layer are integrally constructed, they can be manufactured in one manufacturing step.

The inserts can be economically manufactured by extrusion.

Brief Description of the Drawings

The invention will now be described in more detail by way of example only, and with reference to the attached drawing wherein

Figure 1 is an axial half section through a fly wheel in accordance with the invention including a rotation speed dependent damper;

Figure 2A is a front end view of a rotation speed dependent damper in accordance

with the invention according to a further embodiment;

Figure 2B illustrates, in an alternative embodiment of the invention, the positions adopted by the damping masses of Figure 2A upon occurrence of a rotation vibration superimposed onto the rotation movement of the shaft; and

Figure 3 is a front view of a damping mass in accordance with the invention.

Detailed Description of the Invention

A fly wheel in accordance with the invention is shown in Figure 1 which includes a first fly ring 1 and a second fly ring 2, and a rotation speed dependent damper 3 fastened to the second fly ring 2.

The first fly ring or fly mass 1 is connectable with a drive shaft (not illustrated), for example, with a crank shaft of a motor vehicle engine. The second fly ring or fly mass 2 is mounted on the first fly ring 1 by way of a ball bearing 4, so that the first and the second fly ring 1, 2 are rotatable relative to one another and mounted concentrically to one another. A torsion spring 5 is provided for the suppression of rotation vibrations between the first and second fly rings 1, 2. The torsion spring 5 is connected with the second fly ring 2 by way of a connecting element 6 and a bolt 7. The second fly ring 2 can be connected with a driven shaft 8, for example, the input shaft of a transmission.

The connection between the second fly ring 2 and the drive shaft 8 is achieved in the preferred embodiment illustrated in Figure 1 by way of a clutch 9. The latter is positioned in axial direction of the shaft 8 between the second fly ring 2 and the rotation speed dependent damper 3, whereby an especially compact construction is achieved. The clutch 9 includes a clutch disk 10 which is pressed against the second fly ring 2 by way of a thrust spring 12 acting on a thrust plate 11. The clutch 9 is disengaged in that a releasing lever 13, the location of which is shown in broken lines, moves the clutch release lever 15 pivotally supported by the support 14. The thrust plate 11 is thereby moved away from the clutch disk 10 against the force of the thrust spring 12 by way of a thrust plate lifting element 16 interlocked with the

clutch release lever 15. The damper 3 is mounted on the second fly ring 2 by way of bolts 17 in such a way that the thrust spring 12 is supported by the damper 3. Furthermore, the support 14 and the clutch release lever 15 are located at the radially inner edge of the damper 3.

The rotation speed dependent damper 3 is constructed as a rotation vibration damper and includes at least one hub part 19 rotatable about an axis of rotation 18, as well as several damper masses 20. For each damper mass 20, the hub part 19 includes at least two circumferentially adjacent mounts 21 for mounting the damper masses 20 to the hub part 19. In this embodiment, the hub part 19 is made of first and second hub portions 19A, 19B, whereby the hub portions surround the damping masses on both sides. The hub portions 19A, 19B are sealed by way of seal rings 33, 34.

Each mount 21 is formed by a cutout 22 in each of the hub portions 19A, 19B, and a bolt 23 received therein. The bolt 23, the longitudinal axis of which is oriented parallel to the axis 18 of the hub part 19, also extends through a through-going passage 24 in the damping mass 20 to mount the damping mass to the hub part 19.

Each cutout 22 in the hub portions 19A, 19B is defined by a first curved track 25 and each cutout 24 in the damping mass 20 is defined by a second curved track 26. The first and second curved tracks 25, 26 and the bolt 23 are constructed and positioned in such a way that the damping masses 20 can move relative to the hub part 19 in the form of a rocking movement. The bolt 23 thereby rolls along the first and second curved tracks 25, 26 which are oppositely curved. The first curved track 25 in the hub part 19 is thereby curved away from the axis of rotation 18 while the second curved track 26 in the damping mass 20 is curved towards the axis 18.

Upon occurrence of a rotation vibration superimposed onto the rotation movement of the shaft, the damping masses (or inertia masses) 20 are moved from their middle position illustrated in Figure 2A relative to the hub part 19 and along a curved line of

movement which is determined by the first and second curved tracks 25, 26 and the bolt 23 into the positions illustrated in Figure 2B. This results in a reduction in the spacing of the damper masses 20 from the axis 18, whereby rotation vibrations are counteracted according to the compensation principle. It may be noted that Figure 2B shows a somewhat different embodiment of the invention from Figure 2A but is analogous to Figure 2A in terms of the movement of the damper masses 20 descried above.

Each damping mass 20 further includes a second guide track 27 in the cutout 24 which is opposite the second curved track 26 so that the cutout 24 has the shape of a U which opens away from the axis 18. A corresponding first guide track 28 opposite the second curved track 25 is provided in the mount 21 of the hub part 19 (see broken lines in Figure 2A).

The first and second curved tracks 25, 26 and the first and second guide tracks 28, 27 are part of inserts 29, 30 which are permanently mounted in the hub part 19 or the damping masses 20. The inserts 29, 30 can initially be loosely inserted into and, subsequently, adhesively connected with the hub portions 19A and 19B or the inertia masses 20 by forming thereinto the layer 30, 32 carrying the guide tracks 27, 28.

Changes and modifications in the specifically described embodiments can be carried out without departing from the scope of the invention which is intended to be limited only by the scope of the appended claims.

CLAIMS

1. Fly wheel for damping rotational vibrations and having an axis of rotation, comprising a first fly ring connectable with a drive shaft and a second fly ring connectable with a driven shaft, whereby the first and second fly rings are mounted mutually rotatably and concentrically to one another; a torsion spring positioned between the first and second fly rings for suppressing rotation vibrations between the fly rings; and a rotation speed dependent damper connected with the second fly ring, the damper including a hub part rotatable about the axis of rotation, a plurality of damping masses, and means for pivotally mounting each damping mass for pivoting movement at least in circumferential direction about a pivot axis spaced apart from the axis of rotation, wherein the means for pivotally mounting includes a pair of first curved tracks in the hub part and a pair of second curved tracks in the damping mass and a pair of circumferentially spaced apart bolts extending parallel to the axis of rotation for respectively rolling along one pair of associated first and second curved tracks, the first curved tracks having a U-shaped profile opening in direction of the axis of rotation, and the second curved tracks having a U-shaped profile opening in opposite direction, and first and second guide tracks respectively opposite directed the first and second curved tracks for guiding the bolts in the curved tracks.

2. Fly wheel according to claim 1, wherein the damper is positioned on the power output side of the motor or engine.

3. Fly wheel according to claim 1 or 2, wherein the damper is positioned on a forward end of the second fly ring positioned opposite the power output of the fly wheel.

4. Fly wheel according to one of claims 1 to 3, further comprising a clutch disk with a thrust plate positioned between the second fly ring and the damper for selectively connecting the second fly ring with the driven shaft.

5. Fly wheel according to claim 4, further comprising a thrust spring supported on the damper for forcing the thrust plate against the clutch disk.

6. Fly wheel according to claim 1, wherein each guide track consists of a damping layer of polymeric material.

7. Fly wheel according to claim 1 or 6, wherein the damping layer is made of an elastomeric material.

8. Fly wheel according to one of claims 1 to 7, wherein the damping layer has circumferentially opposite ends with stop surfaces which limit the movement of the bolts to a preselected range.

9. Fly wheel according to one of claims 1 to 8, wherein the first and second curved tracks are an integral part of insert parts for the hub part and the damping masses.

10. Fly wheel according to claim 9 , wherein the insert parts and the damping layers form an integral part of inserts which are each rigidly received in a cutout in the hub part and an opening in each damping mass.

11. Fly wheel according to claim 10, wherein the material forming the damping layer after insertion of the insert part is connected with the inserts by direct forming and solidification of the damping layer onto the hub part and the damping mass.

12. Fly wheel according to one of claims 1 to 11, wherein a gap existing between one of the damping mass and the hub and the inserts after insertion of the inserts is filled with the material of the damping layer for forming a tolerance compensation

layer.

13. Fly wheel according to claim 12, wherein the tolerance compensation layer and the damping layer are integrally formed with one another.

14. Fly wheel according to one of claims 9 to 13, wherein the inserts are made by extrusion.

15. A flywheel, comprising:

- a first fly ring that is connectible to a drive shaft;
- a second fly ring that is connectible to a driven shaft, the first and the second fly rings being rotatable relative to one another and being supported concentrically one inside the other about an axis of rotation;
- a torsion spring for the suppression of torsional vibrations, said torsion spring being located between the first and the second fly rings;
- a speed-dependent damper, affixed to the second fly ring, the speed-dependent damper comprising at least one hub part that is rotatable about the axis of rotation, as well as a plurality of damping masses which are able to circumferentially pivot about pivot axes that are set apart from the axis of rotation
- wherein each damping mass is supported in the hub part by two bolts that are spaced apart from each other in the circumferential direction and which extend parallel to the axis of rotation, the bolts being able to roll on curved paths which, in the region of the hub part, have a profile that is open in a U-shape in the direction of the axis of rotation, and which, in the area of the damping masses, have a profile that is open in a U-shape in the opposite direction; the bolts being guided through a guide track on the sides facing away from the respective curved paths.

16. The flywheel as recited in claim 15, wherein the speed-dependent damper is mounted on the driven side of a prime mover or driven machine.

17. The flywheel as recited in claim 15, wherein the speed-dependent damper is arranged on the end of the second fly ring opposite an output.

18. The flywheel as recited in claim 17, wherein a clutch disk with a pressure plate is arranged between the second fly ring and the damper.

19. The flywheel as recited in claim 15, wherein a clutch disk with a pressure plate is arranged between the second fly ring and the damper.

20. The flywheel as recited in claim 19, further comprising a pressure spring, acting on the pressure plate, which is braced against the damper.

21. The flywheel as recited in claim 15, wherein the guide track is made of a damping layer composed of a polymer material.

22. The flywheel as recited in claim 21, wherein the damping layer is made of an elastomer material.

23. The flywheel as recited in claim 21, wherein the damping layer has sides and ends, in the circumferential direction on each of its sides, and stop faces which limit the circumferential movement of the bolts to a fixed value.

24. The flywheel as recited in claim 23, wherein the curved paths form an integral part of insert parts.

25. The flywheel as recited in claim 24, wherein the insert parts and the damping layer form an integral part of inserts which are immovably accommodated in openings of the hub part and opening of the plurality of damping masses.

26. The flywheel as recited in claims 25, wherein, after the insertion of the

inserts into the openings, a material member forming the damping layer is directly joined to the openings and to the inserts, forming a solid bond.

27. The flywheel as recited in claim 25, wherein a free space is provided between one of a damping mass and the hub, and the inserts, and wherein the free space is filled with the material of the damping layer and forms a tolerance-adjustment layer.

28. The flywheel as recited in claim 27, wherein the inserts are produced by extrusion.

29. The flywheel as recited in claim 24, wherein a free space is provided between one of a damping mass and the hub, and the inserts, and wherein the free space is filled with the material of the damping layer and forms a tolerance-adjustment layer.

30. The flywheel as recited in claim 29, wherein the tolerance-adjustment layer and the damping layer are configured integrally and continuously with one another.

31. The flywheel as recited in claim 29, wherein the inserts are produced by extrusion.

32. The flywheel as recited in claim 15, wherein the curved paths are an integral part of insert parts for the hub.

33. The flywheel as recited in claim 32, wherein the inserts are produced by extrusion.

Fig.1

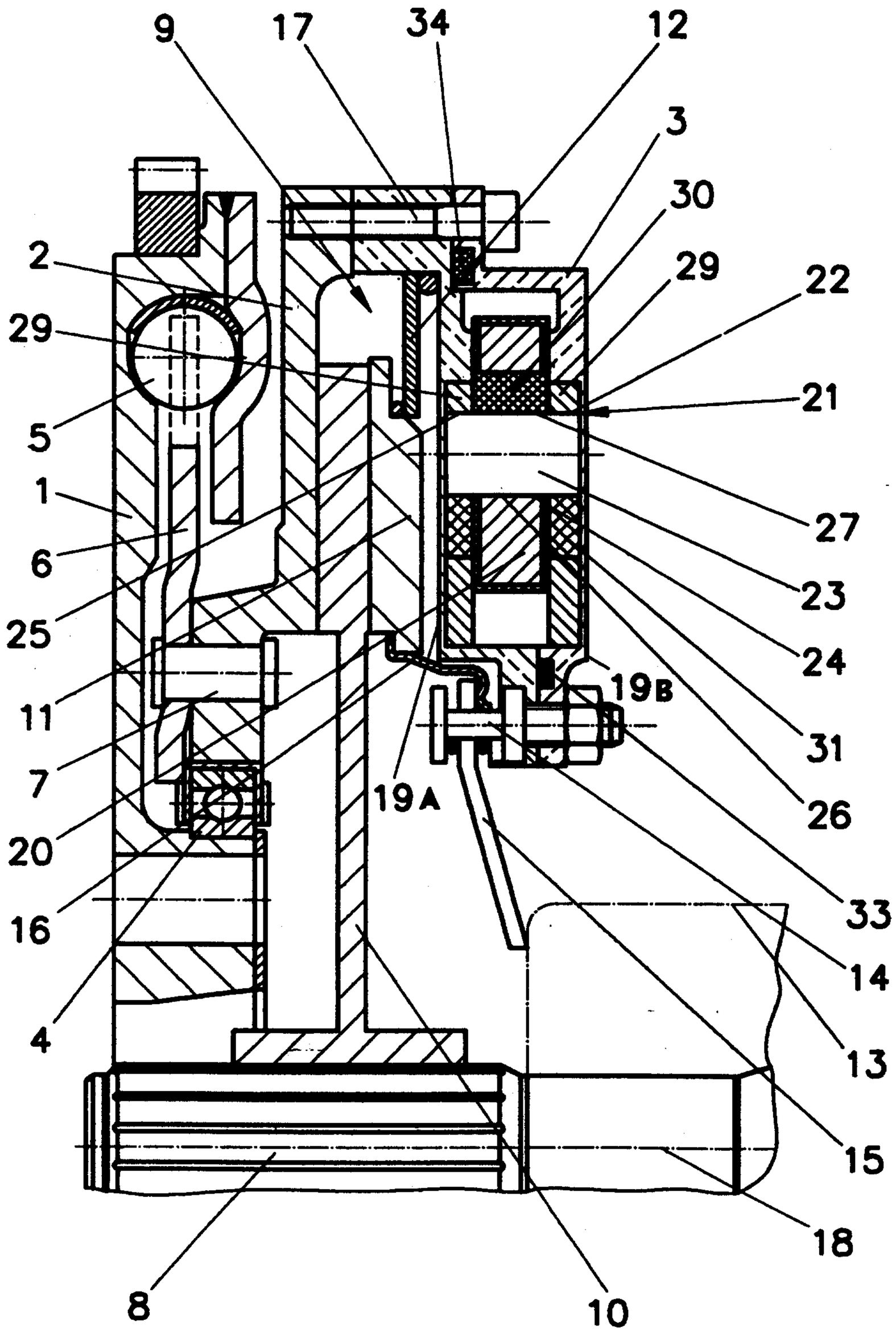
9
17
34
12
3
30
29
22
2
29
21
5
1
27
6
23
25
24
19B
11
31
7
26
19A
20
33
16
14
4
13
15
18
8
10

Fig.2A

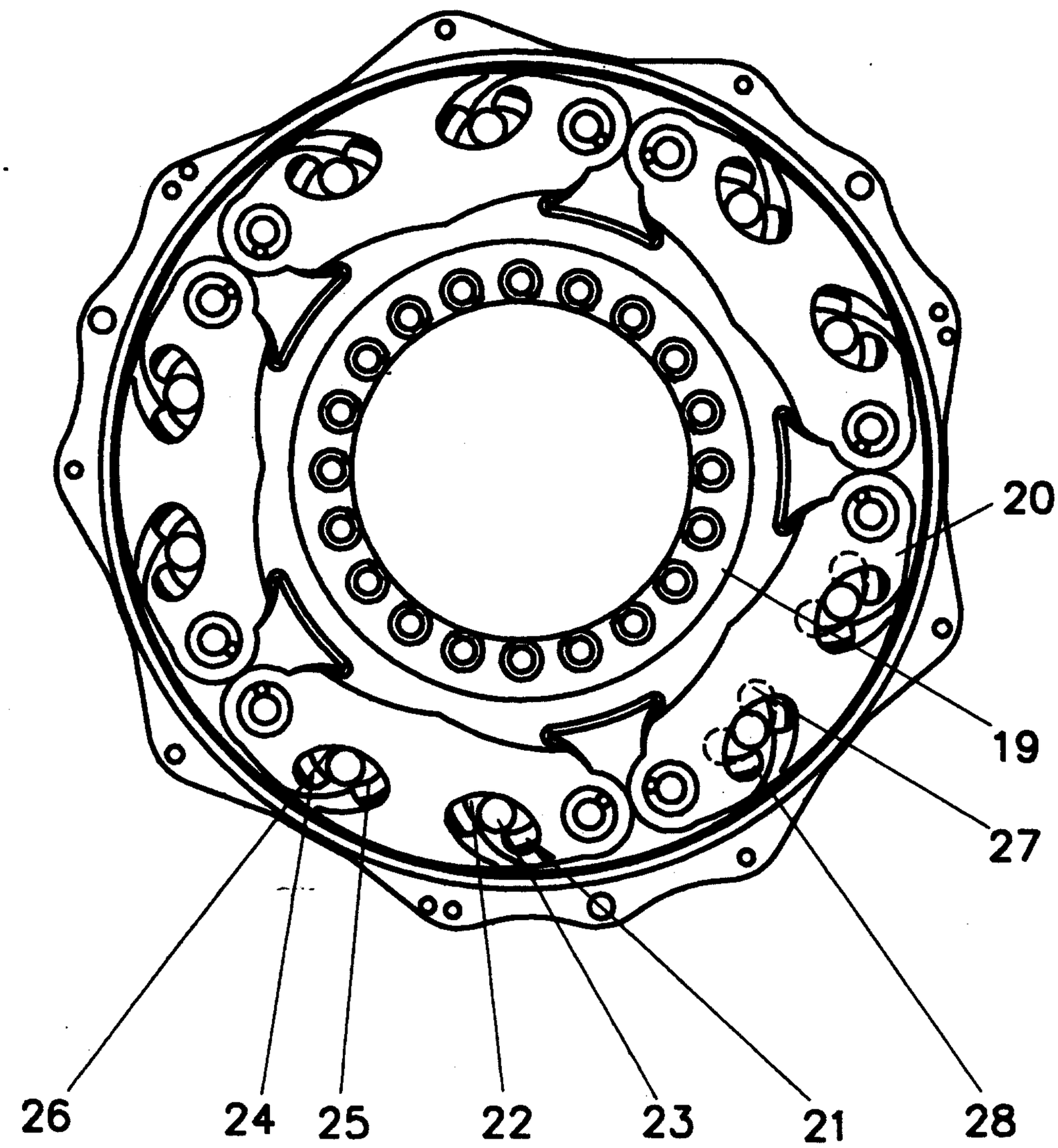

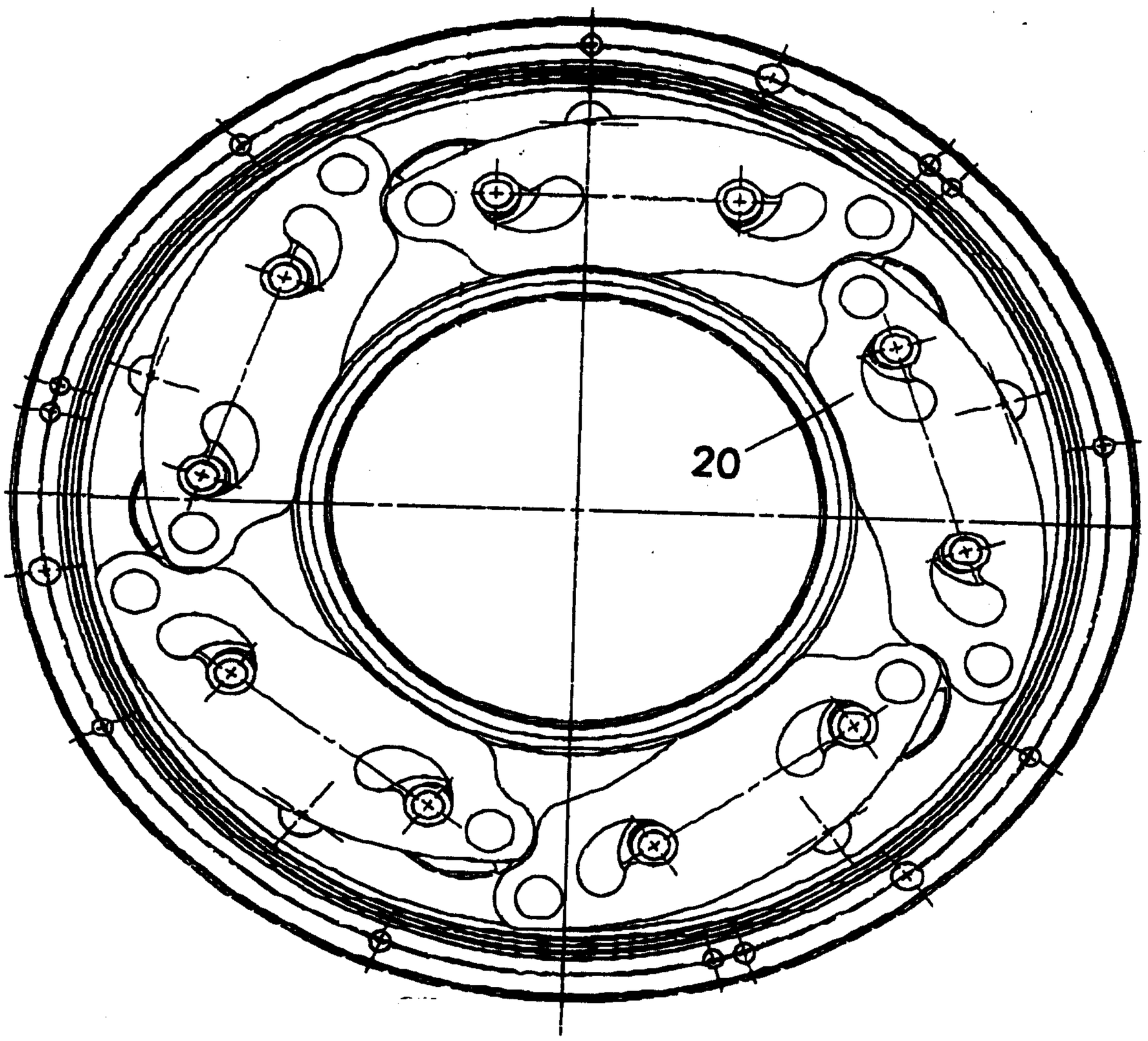

Fig.2B

Fig.3

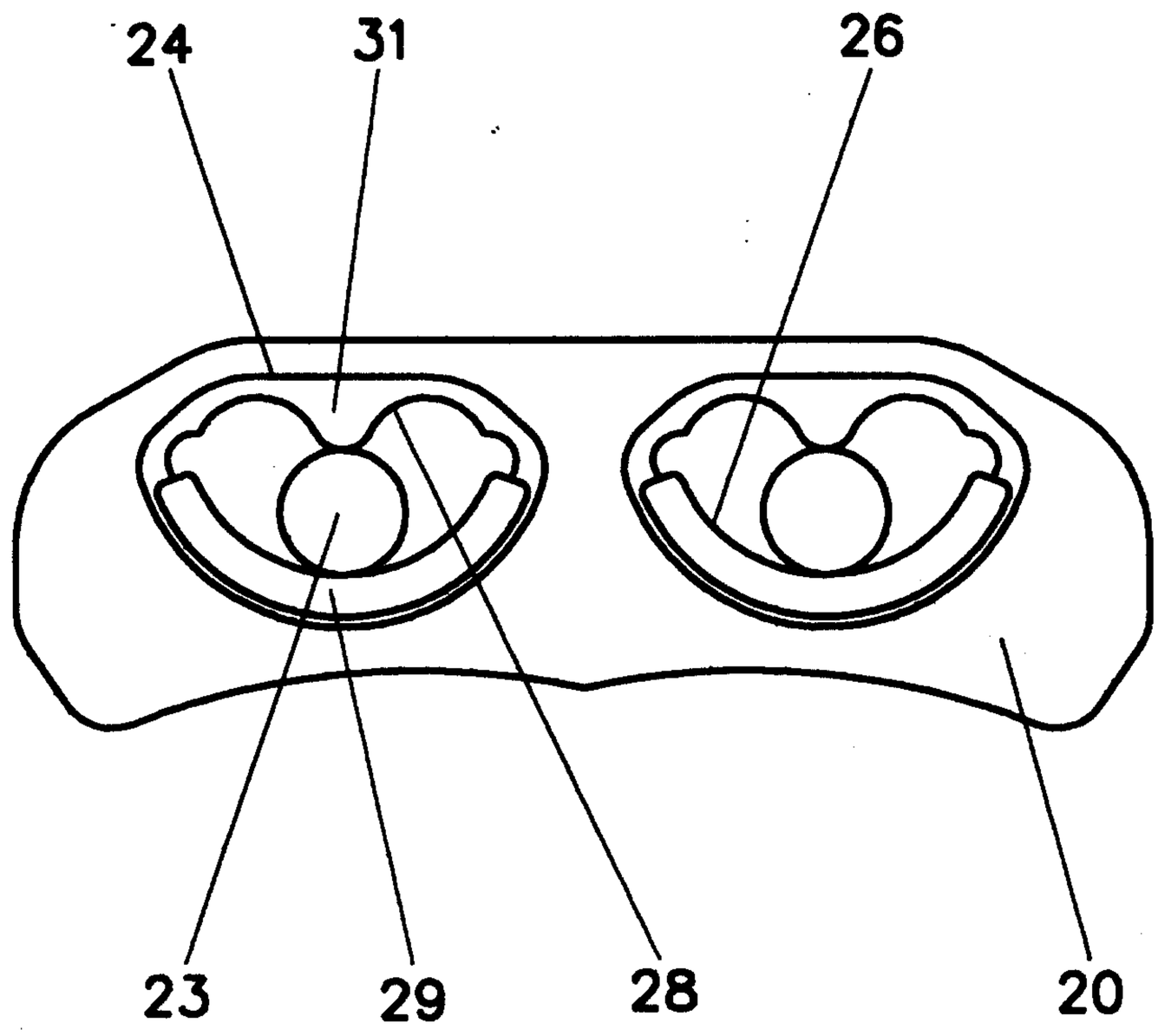

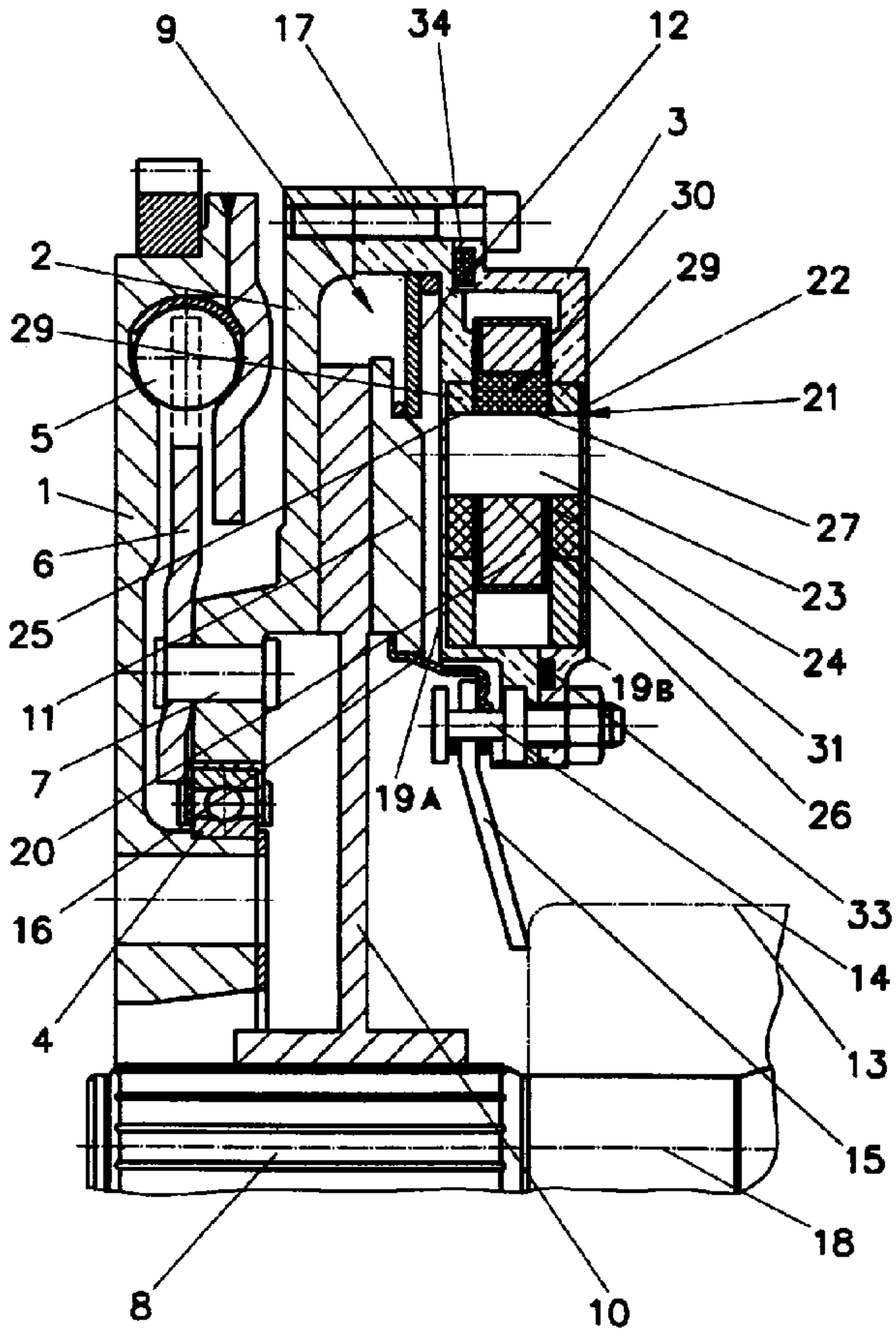
9
17
34
12
3
30
29
22
2
29
21
5
1
27
6
23
25
24
19B
11
31
7
19A
26
20
33
16
14
4
13
15
18
8
10