Nov. 20, 1923. 1,474,687

J. B. RABY, JR

FRUIT DRIER

Filed May 6, 1921 2 Sheets-Sheet 1

Fig. 1.

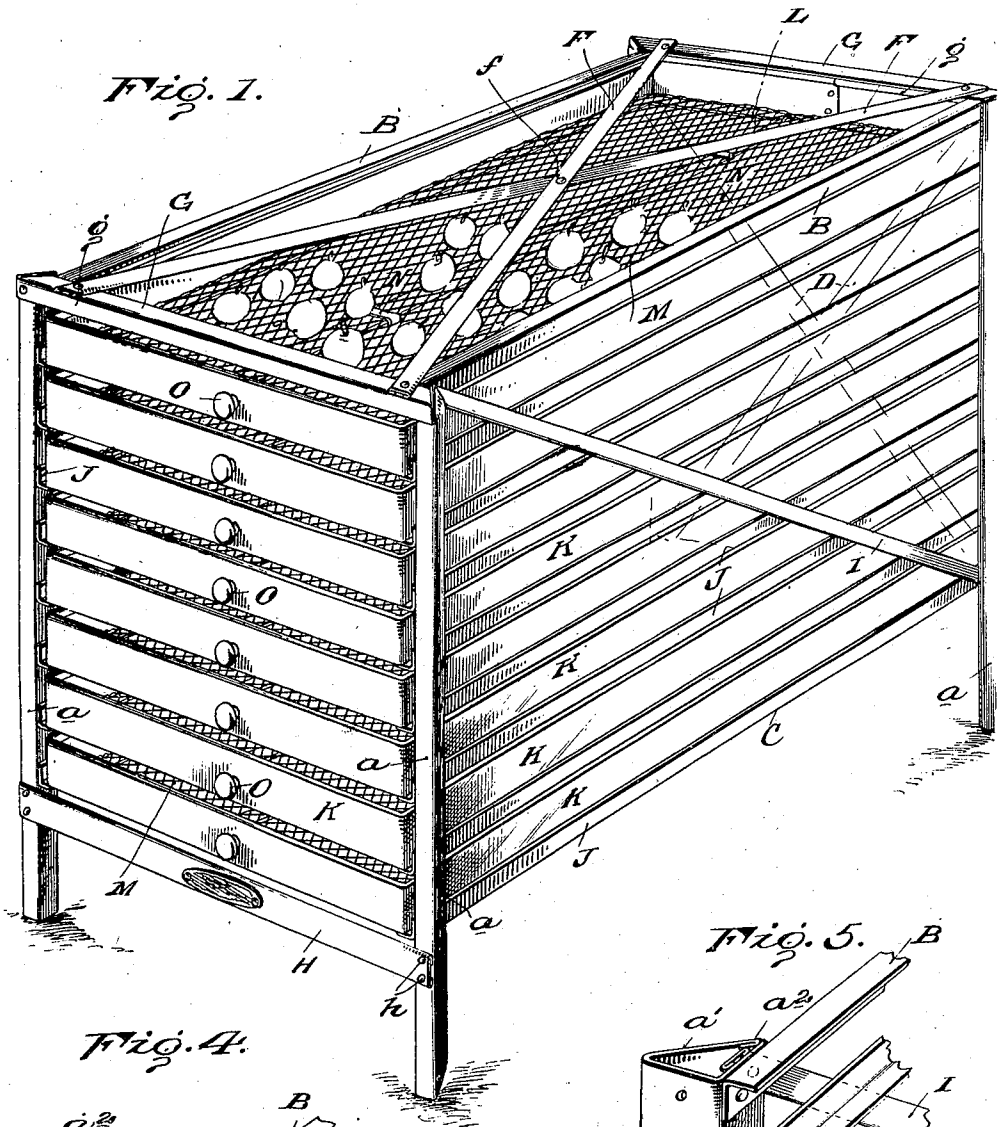

Fig. 4.

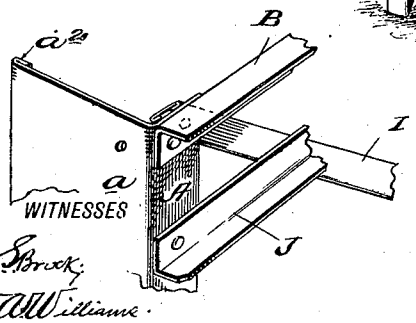

Fig. 5.

WITNESSES

Geo. S. Brock.

W. W. Williams.

INVENTOR

F. B. Raby Jr.

BY Munn & Co.

ATTORNEYS

Nov. 20, 1923. 1,474,687

J. B. RABY, JR

FRUIT DRIER

Filed May 6, 1921 2 Sheets-Sheet 2

Fig. 6.

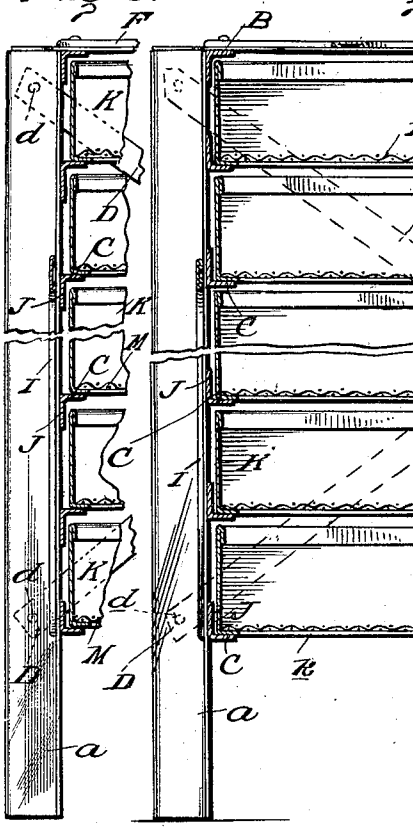

Fig. 2.

Fig. 3.

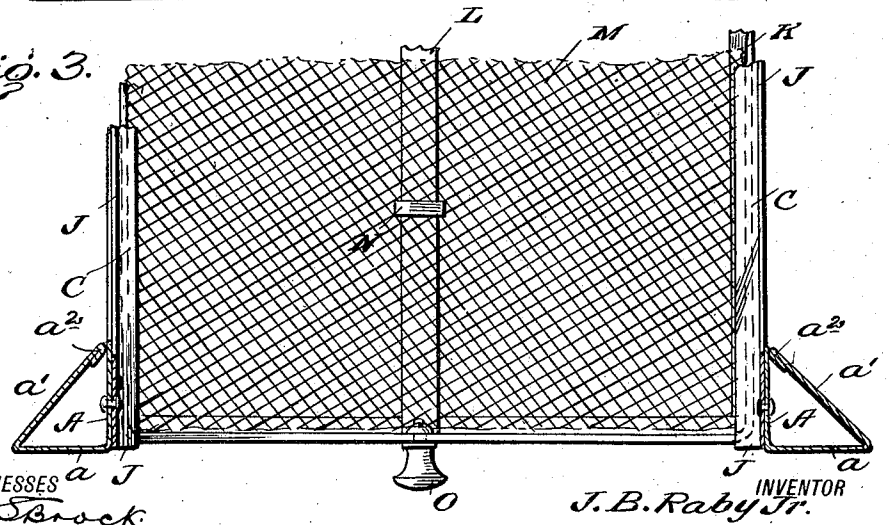

WITNESSES

Geo. S. Brock

W. A. Williams

INVENTOR

J. B. Raby Jr.

BY Munn & Co.

ATTORNEYS

Patented Nov. 20, 1923. 1,474,687

UNITED STATES PATENT OFFICE.

JAMES BUCHANAN RABY, JR., OF YORK, PENNSYLVANIA.

FRUIT DRIER.

Application filed May 6, 1921. Serial No. 467,485.

To all whom it may concern:

Be it known that I, JAMES B. RABY, JR., a citizen of the United States, and a resident of York, in the county of York and State of Pennsylvania, have invented certain new and useful Improvements in Fruit Driers, of which the following is a specification.

My invention relates to improvements in driers and has references more particularly to fruit and vegetable driers intended for domestic use, and an object of the invention is to provide a light and strong, and comparatively inexpensive drier adapted for use on ordinary oil, gas, or cook-stoves, or other suitable heaters.

With this and other objects in view my invention consists in certain novel features of construction, arrangement and combination of parts as will be hereinafter fully set forth and pointed out in the claims, reference being had to the accompanying drawings forming a part hereof, and in which—

Figure 1 is a perspective view showing the drier as in use.

Figure 2 is a vertical section through same.

Figure 3 is a sectional plan view of the front end thereof.

Figure 4 is a fragmentary detail perspective view showing a preliminary step in assembling the front and rear posts, tray tracks or supports, and side braces.

Figure 5 is a similar view showing completion of this operation.

Figure 6 is a sectional view showing another method of applying tray tracks to side frames.

The drier as an entirety comprises a casing composed of a pair of side frames including hollow front and rear posts connected by side tracks, a top piece and a diagonal brace; a back cross brace, a top or squaring-brace, a front tie-piece, and a plurality of open work or reticulated trays removably mounted on the said tracks.

Referring more specifically to the drawing, the side frames, of which there are two, are composed of the front and rear triangular hollow posts A which are shown as partially formed in Figure 4 and are made from a strip of galvanized metal bent to form the inner wall A and the front walls a and the diagonal outside walls a' which are bent at an acute angle rearwardly and have hemmed edges a^2 bearing against the wall A; to the inner walls A are riveted the top crossbars or angle beams B and the angle-iron tracks C, said tracks being L-shaped.

The back cross brace consists of two pieces D of galvanized metal each about one inch wide and hemmed on each edge and held together at the center loosely by a rivet E; each piece D has a hole d punched at each end for receiving the rivets for fastening this brace to the two rear posts of the frame.

The top or squaring brace consists of a similar cross brace, comprising the strips F riveted together rigidly at their center f and also near each end of a front and rear cross bar G having a flange g hemmed on one edge and bent at right angles, the flange having near each end holes punched for receiving rivets for fastening the pieces to the tops of the posts.

At the front of the casing I provide a front tie-piece H to which a name plate may be attached, said tie piece being made of galvanized metal of suitable gage, and about two inches wide, hemmed over on each edge to strengthen same, the tie piece being secured to the front corner posts A by rivets passed through holes near each end of the same.

Side braces I are also provided, said braces consisting of strips of metal hemmed over at each edge and secured at their upper and lower ends to the front and rear posts respectively the ends being riveted to the inside walls of the said posts before the portions a a' a^2 are bent to form the triangular shape for the hollow posts.

The tracks J upon which the trays K are guided and supported are shown made of angle iron with the horizontal flanges projecting inwardly and these tracks are riveted at their front and rear ends to the front and rear posts, to which they are secured before the bending of the flanges of said posts.

The trays used are made from a strip of metal K having the upper edge hemmed over, and a bottom horizontal inwardly projecting flange k; the strip is bent to rectangular shape the ends over lapping at the center of the rear and riveted together at k';

a central supporting bar or hemmed strip L extends lengthwise of the tray from front to rear the ends being supported on and riveted to the horizontal flange and constituting supports for the bottom of the tray, the bottom itself being made of wire mesh and designated by the reference character M; the strip L supports the mesh bottom M and prevents it from sagging in the center, but in addition to this function it gives rigidity to the tray maintaining the strain of the pull and push on the tray when withdrawing it or pushing into the drier by the knob or pull O.

The mesh bottom M of the tray rests loosely at its sides and ends on the inturned flanges *k* of the vertical walls of the tray, and is removably held in the tray by metal clips N which are passed through the mesh and bent around the median bar L. It is preferable to have these mesh bottoms readily removable so as to make it easier to clean the trays, and also to be able to substitute bottoms of proper or desired mesh as adapted for the particular fruit or vegetable to be dried.

As the front tie bar is rigidly connected to the front posts through its entire vertical width, it acts as a brace as well as a tie piece, and also forms a guide for starting a tray into the frame.

To form this drier from the various elements it is necessary to have one front right-hand and one front left-hand post, also one rear right-hand and one rear left-hand post.

As the posts are made of strips of metal of the same size and shape and have the nine holes near one edge of each strip for receiving the rivets for fastening the tray tracks J and top pieces B to the partially formed posts all are placed alike with reference to said edge and all other parts of the strip; the operations of cutting out the strips and punching this row of nine holes are performed on any desired number at the same time and over the same forms.

As the next row of holes to be punched are placed differently for front and rear posts, but similarly for both front posts, and also similarly for both rear posts, the entire lot after being punched for the tracks and top pieces as above described, are divided into two equal lots and one of these lots are then punched over a form for front posts, that is, with one hole near the top for receiving the rivet for fastening the top or squaring brace, and with two holes near the bottom for receiving the rivets for fastening the front tie pieces.

The other half or lot, are punched over a form for rear posts, that is, two holes near the top; one for receiving the rivet for fastening the top or squaring brace, the other for one of the upper arms of the back cross brace, and with one hole near the bottom for the rivet of one of the lower arms of the back cross brace.

After the strips of metal are thus cut out and punched, the next step is to hem the edges which are to be bent down to the sides of the frame in the final operation of forming the posts into triangular shape. In performing this hemming operation it is necessary to bear in mind that this final bend will have to be made to the left for the front right-hand and rear left-hand posts, and to the right for the front left-hand and rear right-hand posts, and that the hemmed side of the edge must lie against the side of the frame; otherwise, one purpose of the hem, namely—that of giving a smooth and finished appearance would be lost.

To prepare these strips cut out and punched as above described for this final bend, as well as for the initial bend or flange to which the tracks and top pieces are riveted with as little handling as possible, one half of them are hemmed in one direction and the other half in the opposite direction; that is to say, one half of them are put into the break or bender with the end which is to be the top of the post to the operator's right hand and the other half with the end which is to be the top of the post, to the operator's left hand.

This prepares all of the strips for the initial break or bend for forming the flange to which the tracks and top pieces are riveted. This bend is made by inserting the unhemmed edge into the break and bending to a right angle in the direction of the lap of the hem, with the result that one half of the thus partially formed posts will have this flange turning to the right for the left-hand front, and right-hand rear posts, and the other half with the flange turning to the left for the right-hand front and the left-hand rear posts.

The eight tracks, the top piece and diagonal side braces are now riveted to the initial flanges of each pair of front and rear posts, which completes the side of the frame, ready to be assembled with the other parts of the frame, and after all the parts of the frame are thus assembled, the final breaks or bends are made to form the posts into triangular shape in cross section.

To put the frame together take two sides made up as hereinbefore described and rivet the back cross-brace to the rear posts through the holes punched for that purpose in the wider flanges thereof near the top and bottom. Then slip the flanges of the top or squaring-brace down over the tops of the front and rear posts and fasten them with rivets through the holes punched therein for the purpose; the front and rear flanges of the top or squaring brace being

parallel with each other and the brace being made rigid in all its parts, and the back cross brace being free to move on its center pivot or rivet, the fastening of the top or squaring brace to the posts in that way will square the frame in addition to bracing it. Then rivet the front tie piece to the wider flanges (front walls) of the front posts through the holes punched therein near the bottom, and the frame will be square and rigid. The posts are then given the triangular form by bending the hemmed edges of the flanges down to the sides of the frame at the edges of the other flanges of the posts.

The purpose of making the posts hollow and triangular shape in section is to give them the necessary strength and rigidity with as little weight as possible and at the same time to be able to rivet the tracks to them instead of soldering them thereto, because soldering is more expensive and not as dependable as riveting. That is to say, the great desideratum is to have a hollow post of extremely light metal, and the triangular shape renders it practicable to rivet the tracks to the posts, and then conceal the rivet heads within the hollow of the posts.

It should be noted that the top side bars which are connected to the front and rear posts are angle iron the same as the tray tracks but that they are reversed having the horizontal member or flanges at the top.

It will also be noted that the trays when all in place practically form a closed casing or shaft open at the top and bottom through the mesh bottoms M, the walls of the trays constituting front rear and side walls, so that the heat will be retained within the drier and pass vertically therethrough, the amount passing through the sides and front and rear being practically negligible.

It will be obvious that that part of the heat passing out through the sides could be kept within and caused to pass up through the machine by reversing all the angle iron tracks, except the lowest one, the same as the top side bars B, as plainly shown in Figure 6, as the subtending flanges C of the tracks thus reversed would cover the upper parts of the trays resting on the tops of the inwardly projecting flanges of the same track just as the subtending flanges of the top side bars B cover the top parts of the topmost tray—without departing from the spirit of my invention.

Having thus fully described my invention, what I claim is:—

1. In a fruit drier, a skeleton frame comprising hollow triangular front and rear corner posts, inverted longitudinal angle irons including horizontal and vertical flanges connecting said corner posts, the horizontal flanges extending inwardly and constituting tray racks and supports, transverse cross brace members connecting said rear posts, the members of said brace being pivotally connected at their intersection, and a rigid top squaring cross brace member connected to the said front and rear posts at their upper ends.

2. A fruit drier comprising a skeleton casing including a pair of side frames consisting of hollow front and rear posts, longitudinal angle irons each having an inwardly extending horizontal flange, said angle irons connecting said posts and constituting tray guides and supports, diagonal side braces connected at their ends to said front and rear posts, a rear cross brace, a top squaring brace frame, said frame comprising front and rear beams and cross beams connecting the same, the cross beams being rigidly connected at their intersection, and the said front and rear beams being rigidly connected at their ends to the aforesaid hollow posts, a tie bar rigidly connecting the front posts at their lower portions, and removable foraminate trays adapted to fit within the drier upon the angle irons, the said guides and trays constituting continuous side walls for the drier.

3. A fruit drier comprising a skeleton frame consisting of hollow triangular front and rear corner posts, horizontal angle irons connecting said posts and forming tray tracks and supports, inverted angle irons constituting top side bars, front and rear cross bars connected to said posts at their upper ends, crossbars rigidly connected at their intersection and rigidly connected at their ends to said front and rear top cross bars, a rigid lower cross bar rigidly connecting the front corner posts, a rear cross brace the members of which are rigidly connected at their ends to the rear corner posts and loosely connected at their intersection, and openwork trays removably supported on said tracks.

4. Corner posts for skeleton frame fruit driers, said posts formed of continuous strips bent to form right-triangular tubes, one perpendicular side of the tube having secured thereto angle irons to form tracks for trays, the other perpendicular side adapted to have rigidly secured thereto top and bottom cross beams, and the diagonal side of the tubes bent over against the first named perpendicular side thereby enclosing the ends of said diagonal side braces within the tubes and concealing the means for fastening the braces and the aforementioned tracks and the cross beams to the posts.

5. Trays for fruit driers comprising vertical front, rear and side walls, horizontal inwardly projecting flanges at the lower ends of said walls, a central longitudinal brace bar secured at its ends on the flanges of said front and rear walls, a foraminate

bottom, means detachably securing the same upon said central brace bar said bottom having its edges loosely fitting within the tray and resting on the horizontal flanges of the front, rear and side walls.

6. A tray for fruit driers comprising vertical front, rear and side walls and horizontal inwardly projecting flanges at the lower ends of said walls, a central longitudinal brace bar secured at its ends to said front and rear flanges, an operating knob secured to the front wall in alinement with the central longitudinal brace bar, whereby the said brace will sustain the strain of the pull and push on the tray when withdrawing or pushing the same into the frame of the drier.

JAMES BUCHANAN RABY, JR.