May 30, 1967 T. LENART ET AL 3,323,020

STRUCTURE FOR COOLING A MICROWAVE GENERATOR

Filed July 10, 1964 2 Sheets-Sheet 1

FIG. 1

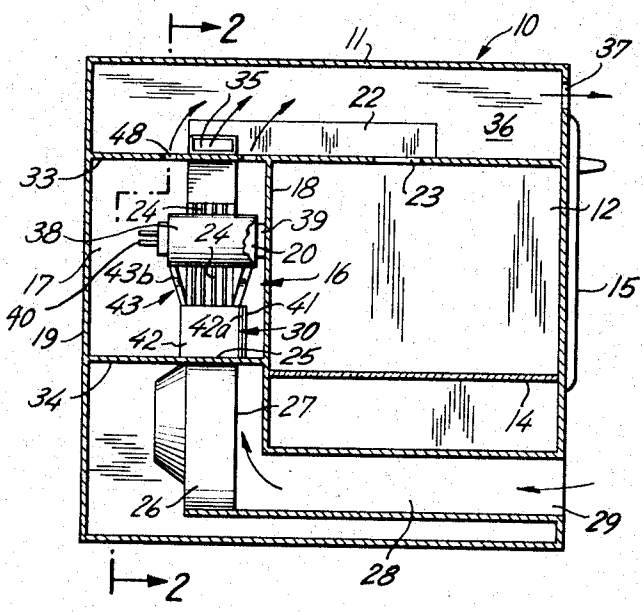

FIG. 4

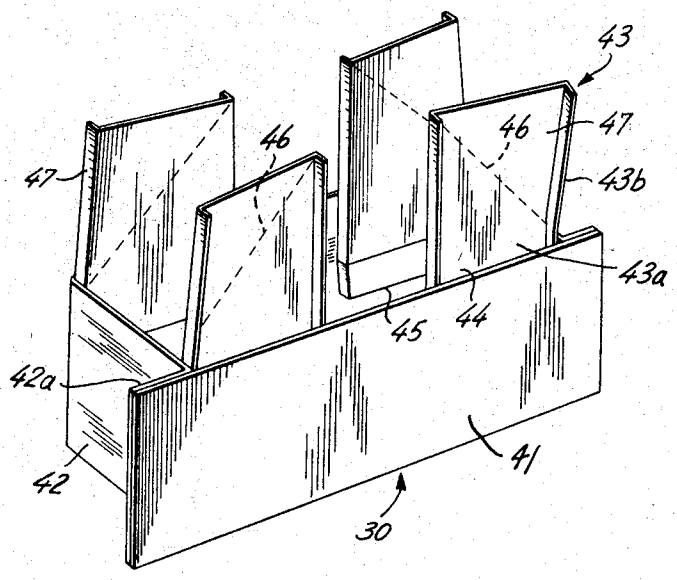

INVENTORS
Tibor Lenart and Bror Gustav
BY Roland Petterson
[signature]
their ATTORNEY

STRUCTURE FOR COOLING A MICROWAVE GENERATOR

Filed July 10, 1964 2 Sheets-Sheet 2

FIG. 2

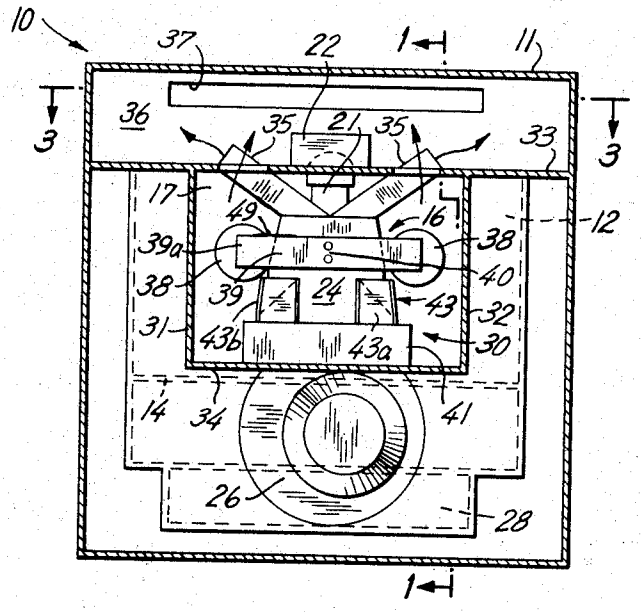

FIG. 3

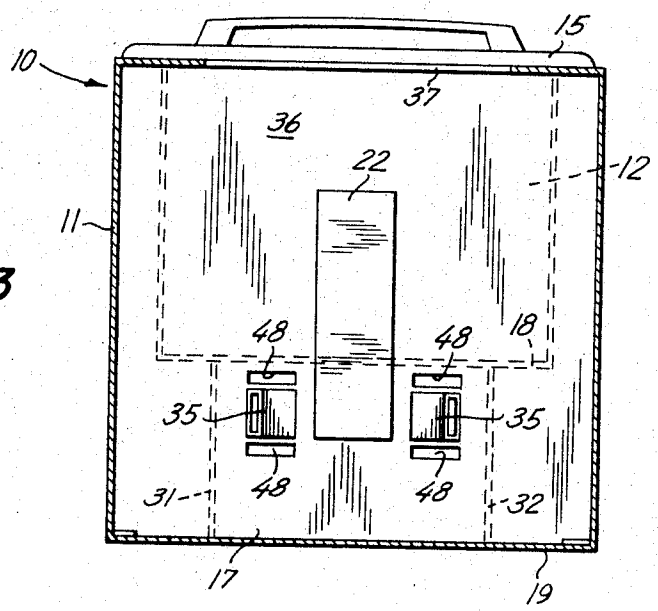

INVENTORS
Tibor Lenart and Bror Gustav
BY Roland Pettersson
Ellen Fernandes
Attorney

United States Patent Office 3,323,020
Patented May 30, 1967

3,323,020

STRUCTURE FOR COOLING A MICROWAVE GENERATOR

Tibor Lenart, Ektorp, and Bror Gustav Roland Pettersson, Bandhagen, Sweden, assignors to Aktiebolaget Electrolux, Stockholm, Sweden, a corporation of Sweden

Filed July 10, 1964, Ser. No. 381,736
Claims priority, application Sweden, July 12, 1963, 7,803/63
12 Claims. (Cl. 317—100)

Our invention relates to microwave generators and more particularly concerns cooling of microwave generators of the magnetron type.

Dielectric heating of material, such as food, for example, in a cavity of an oven by microwave electrical energy developed by microwave generators of the magnetron type has become increasingly popular in recent years. It has been the practice to employ for such dielectric heating of material a magnetron having an anode block and permanent magnets which are supported by and disposed about the anode block, the permanent magnets functioning to improve the efficiency of the magnetron when its temperature increases. For example, a magnetron of this type is disclosed in German Patent No. 1,053,676.

When a magnetron of this type is being operated, its temperature tends to increase due to heating of the anode block and to heating of the magnets disposed about the block. A control usually is provided for the magnetron to regulate the anode current responsive to change in voltage of the source of the electrical supply. It has been observed that the anode current of the magnetron increases responsive to increase in temperature of the permanent magnets in the same manner that the anode current increases with increase in the voltage of the source of the electrical supply. For example, for each degree centigrade that the temperature of the magnets varies the anode current varies to the same extent that it does when the voltage of the source of electrical supply varies about 0.1%.

The control functions responsive to change in voltage resulting from variations in voltage of the source of electrical supply and from variations in temperature of the magnets without differentiating between them. When the temperature of the magnets increases, the ability of the control to function responsive to change in voltage of electrical supply is impaired because controls of moderate cost have a limited regulating range. This is objectionable because in each heating application it is difficult to regulate oven temperature responsive to fluctuations in voltage. This is so because it is not easy to establish an operating temperature for the magnet and adjust the control for such operating temperature so that it will function to regulate the anode current responsive primarily to changes in voltage of the source of electrical supply.

It is an object of our invention to provide an improved arrangement for protecting from objectionable increase in temperature a permanent magnet mounted on an anode block. We accomplish this by mounting the permanent magnet on the anode block by supporting means which provides a path of flow for heat from the anode block to the magnet, and by cooling the supporting means to block the flow of heat in the path of flow and divert from the magnet heat tending to flow thereto from the anode block. More particularly, a part of a cooling air stream normally flowing in thermal exchange relation with the anode block is diverted from the stream and such diverted cooling air is conducted only to regions which are at the vicinities of the magnet supporting means and removed from the magnets.

Another object of our invention is to selectively employ a given volume of circulating cooling air to obtain optimum cooling benefiits therefrom to cool a microwave

generator having an anode block and magnet means supported thereon. We accomplish this by circulating one part of the circulating cooling air to promote cooling of the anode block and diverting from such circulating cooling air a portion which is conducted to regions of the magnet supporting means removed from the magnet means.

Our invention will be more fully set forth in the following description referring to the accompanying drawing, and the features of novelty which characterize our invention will be pointed out with particularity in the claims annexed to and forming a part of this specification.

In the accompanying drawing, FIG. 1 is a vertical section, taken at line 1—1 of FIG. 2, diagrammatically illustrating a microwave oven embodying our invention; FIG. 2 is a vertical sectional view taken at line 2—2 of FIG. 1; FIG. 3 is a horizontal section taken at line 3—3 of FIG. 2, and FIG. 4 is an enlarged fragmentary perspective view of parts shown in FIGS. 1 and 2 more clearly illustrating the construction.

Referring to the drawing, we have shown our invention in connection with a microwave oven **10** comprising a housing **11** having a cavity **12** provided with a shelf **14** desirably formed of material like glass, for example. The cavity **12** has an access opening provided with a door or closure member **15** through which material to be heated, such as food, for example, is inserted into and removed from the cavity.

The material in the cavity **12** is heated by microwave energy produced by a microwave generator, such as a magnetron **16**, for example, which is disposed in a compartment **17** defined in part by the rear wall **18** of the cavity **12** and the rear wall **19** of the housing **11**. The magnetron **16** comprises an anode block **20** and an antenna **21** which projects upward therefrom and from which microwave energy is transmitted. The microwave energy transmitted from the antenna **21**, which projects into a wave guide **22**, travels through the wave guide into the cavity **12** through an opening **23** in the cavity wall. The microwave electrical energy received in the cavity **12** in the form of traveling electromagnetic waves produces an electromagnetic field, whereby heating of the material by dielectric losses is effected.

The anode block **20** is provided with a plurality of vertically disposed heat dissipating surfaces or cooling fins **24** which are spaced from one another and over which is adapted to flow cooling air discharged upward from the outlet **25** of a fan **26**, the inlet **27** of which is arranged to receive air through a duct or channel **28** extending forward from the rear of the housing **11** below the cavity **12** to an air inlet **29** at the front of the housing beneath the door or closure member **15**. A duct or conduit section **30** extends upward from the outlet **25** of the fan **26** to the bottom of the anode block **20** to direct cooling air over the anode block and the heat dissipating surfaces or cooling fins **24** fixed thereto.

The compartment **17** in which the anode block **20** is disposed forms a space which is essentially airtight and sealed from the surroundings, the compartment **17** being formed by the rear wall **18** of the cavity **12**, rear wall **19** of the housing **11**, lateral side walls **31** and **32** and top and bottom horizontal walls **33** and **34**. The cooling air, which flows in thermal exchange relation with the anode block **20** and heat dissipating surfaces **24** and abstracts heat therefrom, flows into the lower ends of a pair of air ducts or channels **35** which are inclined to the vertical and extend upward through openings in the top horizontal wall **33** which is at the same level as the top wall of the cavity **12**. Air discharged from the upper ends of the ducts **35** flows through a horizontal air duct or channel **36** above the cavity **12** to an air outlet **37** at the front of the housing above the door **15**.

A pair of permanent magnets **38** is provided for the anode block **20** of the magnetron **16**. The permanent magnets **38** are supported at the vicinity of the anode block **20** by straps **39** which are formed of material like iron or steel, for example, and form a part of the magnetic circuit for the magnetron. The straps **39** are fixed to the anode block **20** in any suitable manner and include arms **39***a* which project horizontally in both directions from opposing sides thereof, each permanent magnet **38** being held between a pair of projecting arms of the straps **39**.

Although not illustrated, it will be understood that the electrical connections for the magnetron **16** are conventional and that electrical energy from a suitable source of supply may be supplied by conductors (not shown) adapted to be connected at **40** to the magnetron **16**.

In accordance with our invention, the heat conductive straps **39** for supporting the permanent magnets **38** on the anode block **20** are cooled to block flow of heat through the straps and divert from the permanent magnets heat tending to flow thereto from the anode block. We do this by diverting a portion of the cooling air flowing upward in the duct or conduit section **30** and directing the diverted cooling air only to regions which are at the vicinities of the supporting straps **39** and removed from the permanent magnets **38**. As shown in FIG. 4, the duct section **30** is of rectangular form and includes a flat member **41** and a U-shaped member **42** having outwardly extending flanges **42***a* which are secured in any suitable manner to the ends of the flat member **41**. The duct section **30** is connected in any suitable manner to the outlet **25** of the fan **26** and to the lower end of the magnetron **16** for directing air discharged from the fan to pass upward in thermal exchange relation with the anode block **20** and heat dissipating surfaces **24** fixed thereto.

Each of the long sides of the duct section **30** is provided with air deflecting members **43** having wide flat portions **43***a* and narrow flanges **43***b* perpendicular thereto. The members **43** are positioned vertically within the duct section **30** with the flanges **43***b* bearing against the inner surfaces of the long duct sides. The members **43** are fixed in any suitable manner to the long sides of the duct section **30** to provide vertically extending air passages **44** into which a part of the cooling air discharged by the fan **26** is diverted. In order to promote the quantity of cooling air diverted into the air passages **44**, the bottom portions of the members **43** may be bent inward from the adjacent wall surface of the duct section **30**, as indicated at **45** in FIG. 4, to form air scoops.

Since the distance between the long sides of the duct section **30** is less than the distance between the straps **39**, the top parts of the air deflecting members **43** projecting above the duct section flare outward, as best shown in FIG. 1, in order to deflect air flowing upward in the passages **44** and direct such deflected air to the straps **39**. Further, the members **43** may be bent along the dotted lines **46** to form triangular-shaped portions **47** which slope outward from the long sides of the duct section **30** to direct the diverted air from the passages **44** essentially toward the straps **39** at regions thereof which are intermediate the anode block **20** and permanent magnets **38**.

The cooling air flowing in thermal exchange relation with the straps **39** abstracts heat therefrom and flows from the essentially airtight compartment **17** through openings or slots **48** in the top wall **33** thereof. The air discharged in the channel **36** through the openings **48** mixes with air flowing into the channel **36** through the ducts **35** and passes from the housing **11** through the outlet **37**.

In view of the foregoing, it will now be understood that we have provided an improved arrangement for flowing a cooling medium in heat transfer relation only with the supporting means or straps **39** for the permanent magnets **38** to block flow of heat through the supporting means which provide paths of flow for heat from the

anode block **20** to the magnets **38**. The cooling medium flowing in intimate physical contact with the straps **39** abstracts heat therefrom and diverts from the magnets **38** heat tending to flow thereto from the anode block **20**. As best seen in FIG. 2, the opposing end edges of the heat dissipating members **24** are spaced at **49** from the permanent magnets **38** and, since the flow of heat to the magnets through the straps **39**, which provide the only heat conductive path from the anode block **20**, is blocked, the relatively massive permanent magnets **38** are effectively maintained at a low temperature during operation of the magnetron **16**.

Since the straps **39** are of relatively small size compared to the size of the magnets **38**, it will be evident that less cooling air will be required to block the flow of heat through the straps **39** to the magnets **38** than would be required to allow heat to flow through the straps to the magnets and abstract heat from the relatively large magnets by flowing cooling air in thermal exchange relation therewith.

Moreover, a simple fabricated structure is obtained in which sheets may be employed to provide the air deflecting members **43** having lower parts which are retained within the duct section **30** and coact therewith to form air diversion passages **44** and upper projecting parts which are bent outward from the opposing long sides of the duct section **30** to direct the diverted cooling air toward the straps **39** and bypass the magnets **38**, so that the need for providing a cooling medium for the straps **39** which is completely independent of the air cooling system for the anode block **20** is unnecessary. This produces an inexpensive and easily manufactured construction for cooling the supporting means or straps **39** without cooling the permanent magnet means or magnets **38**.

Although we have illustrated and described a particular embodiment of our invention, we do not desire to be limited to the particular arrangement set forth, and we intend in the following claims to cover all modifications which do not depart from the spirit and scope of our invention.

We claim:

1. A generator for producing microwave energy having an anode block, permanent magnet means, means for supporting said permanent magnet means at the vicinity of said anode block, said supporting means providing a path of flow for heat from said anode block to said magnet means, and means for cooling said supporting means to block flow of heat in said path of flow and divert from said magnet means heat tending to flow thereto from said anode block, said cooling means comprising structure for cooling said supporting means without cooling said permanent magnet means.

2. A generator for producing microwave energy having an anode block, permanent magnet means, means for supporting said permanent magnet means at the vicinity of said anode block, said supporting means providing a path of flow for heat from said anode block to said magnet means, and means for flowing a cooling medium in heat transfer relation with said supporting means to abstract heat therefrom and divert from said magnet means heat tending to flow thereto in said path of flow from said anode block, the last-mentioned means functioning to flow the cooling medium in heat transfer relation with said supporting means and bypass said magnet means.

3. A generator for producing microwave energy having an anode block, permanent magnet means, means for supporting said permanent magnet means at the vicinity of said anode block, said supporting means providing a path of flow for heat from said anode block to said magnet means, a source of supply of a cooling medium, means defining a path for conducting the cooling medium from the source of supply to a region which is at the vicinity of said supporting means and removed from said magnet means to flow the cooling medium in thermal exchange relation with said supporting means at said region to abstract heat from said supporting means and divert

from said magnet means heat tending to flow thereto in said path of flow from said anode block, the last-mentioned means functioning to conduct the cooling medium in its path in thermal exchange relation with said supporting means and bypass said magnet means.

4. A generator for producing microwave energy having an anode block, permanent magnet means, means for supporting said permanent magnet means at the vicinity of said anode block, said supporting means providing a path of flow for heat from said anode block to said magnet means, means defining a path for conducting cooling air in thermal exchange relation with said anode block, mechanical means for inducing flow of cooling air in said air conducting path to abstract heat from said anode block, and means for diverting cooling air from said air conducting path at a region thereof ahead of said anode block and flowing the diverted cooling air in thermal exchange relation with said supporting means to abstract heat therefrom and divert from said magnet means heat tending to flow thereto in said path of flow from said anode block, the last-mentioned means functioning to flow the diverted cooling air in thermal exchange relation with said supporting means and bypass said magnet means.

5. A microwave generator as set forth in claim 4 in which said means defining the air conducting path includes structure providing a substantially airtight compartment having an inlet and outlet for cooling air, said anode block and magnet means being disposed in said compartment.

6. A magnetron having an anode block, a pair of magnets disposed about and at the vicinity of said anode block, means including straps for supporting said magnets on said anode block, said straps being at diametrically opposite sides of said anode block and including pairs of arms extending horizontally in both directions from said anode block, each of said magnets being held between a different pair of said arms, a circuit for circulating cooling air vertically past said anode block to abstract heat therefrom, said circuit including a multi-sided duct of rectangular form having a vertically extending passage from which cooling air flows toward said anode block, and means including plate members within said duct which cooperate with the sides of said duct to provide vertically extending channels into which a part of the cooling air circulating in said circuit is diverted, and said plate members including upper parts which project above said duct and are shaped to conduct and guide diverted cooling air toward regions of the arms of said straps between said anode block and said magnets.

7. A generator for producing microwave energy having an anode block, permanent magnet means, means for supporting said permanent magnet means at the vicinity of said anode block, said supporting means providing a path of flow for heat from said anode block to said magnet means, means defining a path for conducting cooling air in thermal exchange relation with said anode block, mechanical means for inducing flow of cooling air in said air conducting path to abstract heat from said anode block, means for diverting cooling air from said air conducting path at a region thereof ahead of said anode block and flowing the diverted cooling air in thermal exchange relation with said supporting means to abstract heat therefrom and divert from said magnet means heat tending to flow thereto in said path of flow from said anode block, said means defining the air conducting path including a multi-sided duct having a vertically extending passage, said duct being interposed between said mechanical means and said anode block, and said means for diverting cooling air from said air conducting path comprising vertically extending passages formed by the sides of said duct and plate members adjacent to and spaced from said duct sides.

8. A microwave generator as set forth in claim 7 in which said plate members are disposed at the inner surfaces of said duct sides and the lower ends of said plate members flare inward from said duct sides to form air scoops to promote diverting cooling air into said passages.

9. A microwave generator as set forth in claim 7 in which the upper parts of said plate members project upward from said duct and extend toward said supporting means.

10. A microwave generator as set forth in claim 9 in which the upper parts of said plate members are inclined to the vertical whereby the under surfaces of the upper inclined parts of the plate members deflect and conduct the diverted air to said supporting means.

11. A microwave generator as set forth in claim 10 in which said plate members are bent along lines extending diagonally across said members to provide triangular-shaped zones at the extreme upper parts of said plate members to conduct and guide the diverted air to said supporting means.

12. A microwave generator as set forth in claim 7 in which said plate members are disposed within said duct and spaced from the inner surfaces thereof and are formed with flanges at opposing edges thereof which extend toward the inner surfaces of said duct sides to form said passages.

References Cited

UNITED STATES PATENTS

3,127,495 3/1964 Polries et al. ------ 219—10.55

OTHER REFERENCES

Auslegeschrift, German application, S.N. 1,053,676 (Schmidt), Mar. 26, 1959.

ROBERT K. SCHAEFER, *Primary Examiner.*

M. GINSBURG, *Assistant Examiner.*