C. E. Yager,

Flour Sieve Attachment.

No. 54,994. Patented May 22, 1866.

Fig. 1.

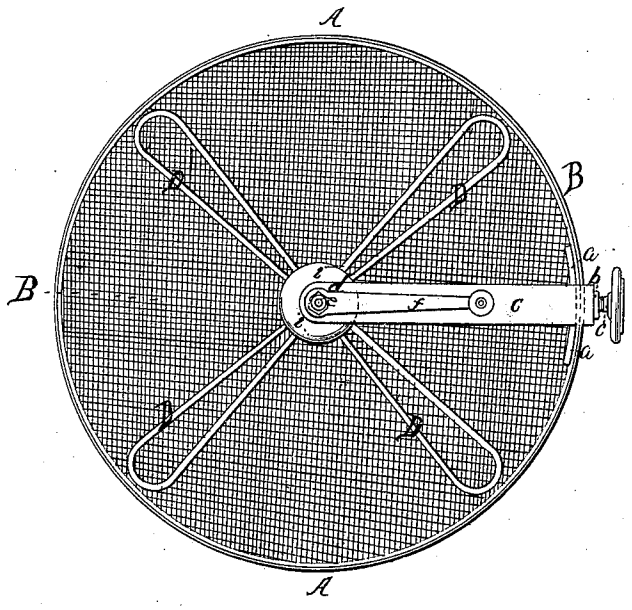

Fig 2.

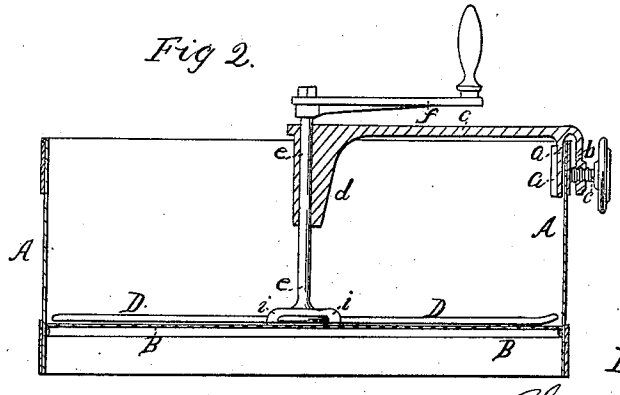

Witnesses.

J. W. Coomly.

A. Lellery

Inventor.

Chas E. Yager.

per Brown Coombs & Co.

Atty's.

N. PETERS, PHOTO-LITHOGRAPHER, WASHINGTON, D. C.

UNITED STATES PATENT OFFICE.

CHARLES E. YAGER, OF HUDSON, NEW YORK.

IMPROVED FLOUR-SIEVE.

Specification forming part of Letters Patent No. **54,994**, dated May 22, 1866.

To all whom it may concern:

Be it known that I, CHARLES E. YAGER, of Hudson, in the county of Columbia and State of New York, have invented a new and Improved Attachment for Flour-Sieves; and I do hereby declare that the following is a full, clear, and exact description of the same, reference being had to the accompanying drawings, making a part of this specification, in which—

Figure 1 is a plan or top view, and Fig. 2 is a vertical transverse section.

Similar letters of reference indicate corresponding parts in both figures.

This invention is designed to be attached to the common circular flour-sieve; and it consists in a horizontal frame secured to one side of the sieve by means of a thumb-screw or other suitable means, and supporting at its inner end a vertical shaft situated centrally in the sieve and provided at its upper end with a crank, by means of which it is rotated, and at its lower end with a number of horizontal scrapers or agitators, which scrape and agitate the flour in contact with the wire-cloth bottom of the sieve, and rapidly force it through the meshes thereof, the said parts being removable, so that the sieve may be used alone in the ordinary manner when desired.

To enable others to understand the construction and operation of my invention, I will proceed to describe it with reference to the drawings.

A indicates the circular body or sides, and B the wire-cloth bottom of a common flour-sieve.

C represents a frame, which may be made of malleableized cast-iron or other suitable material, and which supports the working parts of the attachment. This frame C is itself attached in a horizontal position to one side of the body of the sieve by means of two downwardly-projecting lips, *a* and *b*, formed upon the outer end thereof and placed at right angles to its main length. The outer side of the inner lip, *a*, should be curved in its horizontal transverse section to correspond with the curvature of the inner side of the body A, against which it is placed. The other lip or projection, *b*, which is situated upon the outer side of the said body, has a thumb-screw, *c*, passing through it, so that the said screw *c*, being turned inward, will firmly clamp the side of the body A between its inner end and the lip *a*, and thus rigidly attach the said frame C to the sieve, with its inner end situated over the center of the same. Formed upon and projecting downward from the said inner end of the frame C is a vertical tubular bearing or sleeve, *d*, in which is situated the upright shaft *e*, which has a crank, *f*, fixed upon its upper end, by means of which it is rotated in operating the attachment, as will be presently more fully set forth.

D represents horizontal scrapers or agitators, of which any suitable number may be employed, and which may be made of wire bent into the shape more clearly shown in Fig. 1, or may be made of any other suitable material or form. These scrapers or agitators are secured at their inner ends to the lower end of the shaft *e*, in an enlargement, *i*, formed upon the said lower end of the shaft, and, a rotary motion being communicated to the said shaft by means of the crank *f*, the aforesaid scrapers D are made to revolve nearly or quite in contact with the wire-cloth bottom of the sieve, and thus by stirring and agitating the flour in contact therewith rapidly force it through the meshes of the same.

In order that the scrapers may be pressed against the bottom of the sieve with any required degree of pressure, or operated, if desired, at a greater or less distance from the same, the shaft *e* may be moved up and down in the said bearing by making the bearing shorter than the shaft *e*, as shown in Fig. 2.

By simply unscrewing the thumb-screw *c*, and thus loosening its hold upon the sieve, the frame C, with its appurtenances, may be removed therefrom, to allow the sieve to be used in the ordinary manner when desired.

What I claim as new, and desire to secure by Letters Patent, is—

The attachment consisting of the removable radial frame C, with its clamp and set-screw *a b c*, carrying the rotary scrapers D, shaft *e*, and crank *f*, arranged and operating with reference to each other when applied to a circular flour-sieve, substantially as herein set forth, for the purposed specified.

CHAS. E. YAGER.

Witnesses:

ALONZO GREENE,

WILLIAM R. STEEL.