Dec. 28, 1937. S. G. DOWN 2,103,324

DOOR CLOSING WARNING SIGNAL

Filed Aug. 10, 1935

Fig. 1.

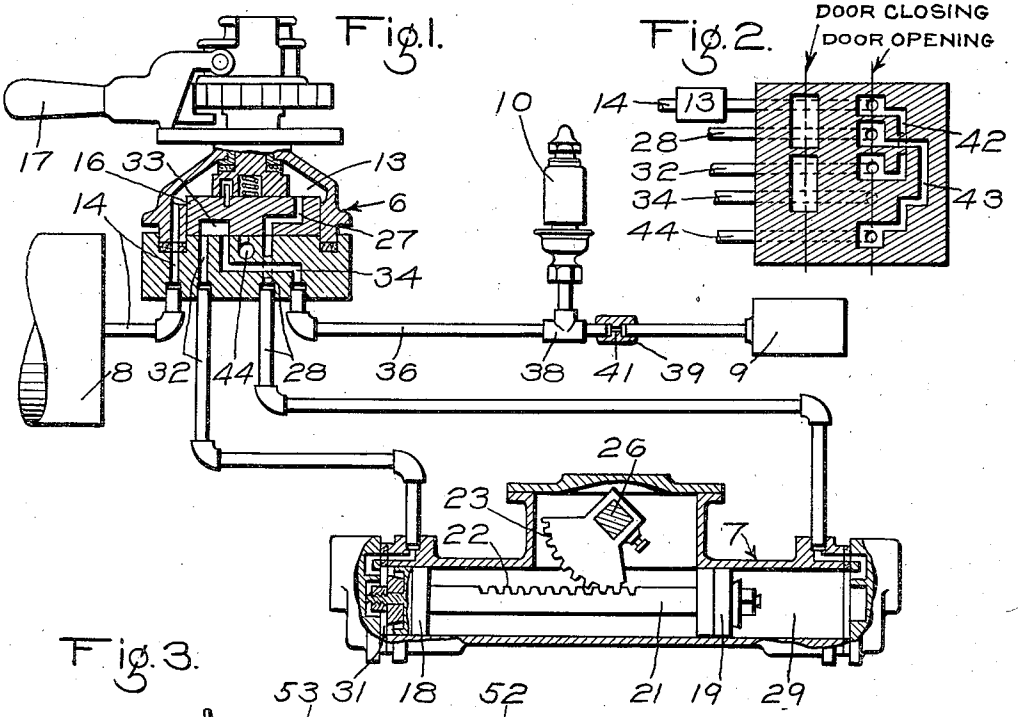

Fig. 2.

Fig. 3.

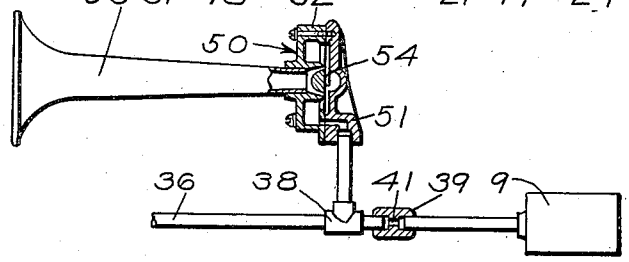

Fig. 4.

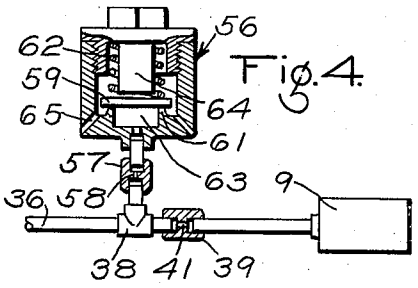

Fig. 5.

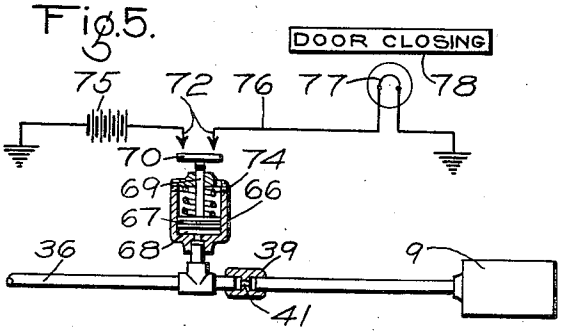

INVENTOR
SIDNEY G. DOWN
BY Wm. M. Cady
ATTORNEY

Patented Dec. 28, 1937 2,103,324

UNITED STATES PATENT OFFICE

2,103,324

DOOR CLOSING WARNING SIGNAL

Sidney G. Down, Edgewood, Pa., assignor to Westinghouse Air Brake Company, Wilmerding, Pa., a corporation of Pennsylvania

Application August 10, 1935, Serial No. 35,600

1 Claim. (Cl. 116—65)

This invention relates to door controlling equipments, and particularly to the type employing a fluid pressure operated door engine for controlling the doors of a passenger vehicle.

The principal object of my invention is to provide, in a door controlling equipment of the above type, indicating means automatically operative, upon the initial operation of the equipment by the operator in effecting the closing of the door, to warn the passengers that the door is about to close, thereby serving to clear the door area safely in advance of the closing of the door.

Another object of my invention is to provide indicating means functioning as just described at a definite time interval prior to the closing of the door.

A further object of my invention is to provide indicating means of the above character of simple and economical construction, by utilizing the pressure of fluid exhausted from a door engine in operating to the door-closing position for actuating such indicating means.

In the accompanying drawing: Fig. 1 is a diagrammatic, sectional view of a fluid pressure door operating equipment embodying one form of my invention; Fig. 2 is a development view of the operator's door valve device provided in the equipment shown in Fig. 1; Fig. 3 is a diagrammatic view, partly in section, of a modification of the signal element of my invention; Fig. 4 is a diagrammatic view, partly in section, of a further modification of the signal element; and Fig. 5 is a diagrammatic view of my invention in a form employing electrical signal means.

As shown in Fig. 1 of the drawing, the door controlling equipment comprises an operator's door valve device 6, a door engine 7, a reservoir 8, a door engine exhaust muffler 9, and according to my invention, a signal device 10.

The door valve device 6 comprises a casing having a chamber 13 connected through a passage and pipe 14 to the reservoir 8, and containing a rotary valve 16 adapted to be operated through the medium of a handle 17.

The door engine 7 comprises a casing having slidably mounted therein door-opening and door-closing pistons 18 and 19, respectively, said pistons being secured to opposite ends of a rack member 21. The rack member has teeth 22 in operative engagement with a gear segment 23, which is mounted on a rotatable shaft 26, adapted to be connected to a door or the like (not shown), in any suitable manner.

With the door valve device 6 in the door-closed position as shown in Fig. 1 of the drawing, the chamber 13 is connected through a port 27 in rotary valve 16 and a passage and pipe 28 to a piston chamber 29 at the outer side of the door-closing piston 19. A similar piston chamber 31 at the outer side of the door-opening piston 18 is, in the door-closed position, connected by way of a pipe and passage 32, a cavity 33 in rotary valve 16, and a passage 34 to an exhaust pipe 36.

According to my invention, the signal device 10, which in the embodiment shown in Fig. 1 is in the form of a whistle device, is connected to the exhaust pipe 36 by means of a branch pipe T 38, a choke fitting 39 having a restricted passage 41 being provided in said pipe beyond said branch pipe T for effecting a local back pressure upon the flow of fluid under pressure through the exhaust pipe. The outer end of the exhaust pipe is connected to atmosphere through the usual muffler device 9, which may be of any suitable construction.

When it is desired to operate the door controlling equipment to open the door for the accommodation of passengers, the handle 17 of the door valve device is moved to the door-open position. Fluid under pressure supplied to the reservoir 8 in the usual well known manner then flows through pipe and passage 14 to chamber 13, and thence through a port 42 in the rotary valve 16 and passage and pipe 32 to chamber 31 in the door engine 7. The pressure of fluid in the chamber 31 acting on the door-opening piston 18 operates the rack member 21 and gear segment to door-open position, while the door-closing piston 19 is shifted outwardly, the piston chamber 29 being vented to atmosphere by way of pipe and passage 28, a cavity 43 in the rotary valve 16 and an atmospheric exhaust port 44.

In order to effect the closing of the door, the operator moves handle 17 to the door-closed position, whereupon fluid under pressure, which was bottled up in the piston chamber 31 of the door engine 7 during the previous door-opening operation just described, flows from said piston chamber through pipe and passage 32, cavity 33 and passage 34 to the exhaust pipe 36. Since the restricted passage 41 in the choke fitting 39 permits only a relatively slow flow of fluid from the exhaust pipe to atmosphere by way of the muffler device 9, a back pressure, sufficient to operate the whistle device 10, is built up in said pipe. An audible warning to the passengers that the door is about to close is thus sounded.

On movement of the door valve device 6 to the door-closed position as just described, fluid under pressure is supplied from the reservoir 8 through pipe and passage 14, chamber 13 in said device, port 27, and passage and pipe 28 to the piston chamber 29. When the fluid pressure in said chamber 29 is increased sufficiently, the door-closing piston 19 is moved to the left, operating the rack member 21 and the gear segment 23, and shifting the door-opening piston 18 outwardly against the reduced fluid pressure in chamber 31.

It will be seen that by reason of the small flow

area of the restricted passage 41 in the exhaust pipe 36, the venting of the fluid under pressure bottled up in the door engine piston chamber 31 may be at a rate slow enough to retard the movement of the connected pistons 18 and 19 to the left under the pressure of fluid supplied to the piston chamber 29, thereby effecting a predetermined delay in operation of said door engine to the door-closed position. The operation of the signal device by action of the fluid pressure in the exhaust pipe 36 is thus automatically effected a definite interval of time prior to said operation of the door engine.

In Fig. 3 of the drawing, the invention is shown in another form, in which a pneumatic horn device 50 is provided for sounding the warning signal, it being noted that in other particulars, such as the interconnections with the door operating equipment, the arrangement is similar to that disclosed in Fig. 1. The horn device 50 comprises a pipe bracket 51 which is connected by way of the branch pipe T 38 to the exhaust pipe 36 at a point intermediate the choke fitting 39 and the door engine, a body portion 52 mounted to said pipe bracket, and a horn bell 53 secured to said body portion. A diaphragm valve 54 which is interposed between the body portion and the pipe bracket, is adapted to vibrate under the pressure of fluid exhausted through the pipe 36 in the manner hereinbefore described, thereby producing the desired signal.

Fig. 4 of the drawing shows a further modification of the signal element of my invention, in which a buzzing check valve device 56 is connected through a choke fitting 57 having a restricted passage 58 to the branch pipe T 38, which is interposed in the exhaust pipe 36 at a point intermediate the choke fitting 39 and the door engine. The check valve device comprises a casing containing a valve plate 59 which is normally urged into engagement with a seat rib 61 by the pressure of a spring 62. When fluid under pressure is supplied to the exhaust pipe 36 from the door engine just before the doors begin to close, as already described, a portion of said fluid flows by way of the restricted passage 58 to a chamber 63 in the check valve device and acts on the valve plate 59. The said valve plate is thus forced from the seat rib 61 into engagement with the end of a stop portion 64, and fluid under pressure then flows from the chamber 63 through atmospheric exhaust passages 65. Since fluid under pressure in chamber 63 is vented at a rate faster than that at which it is built up by the supply of fluid through the restricted passage 58, the fluid pressure acting on valve plate 59 is quickly decreased, permitting spring 62 to seat said plate. Upon the fluid pressure in chamber 63 again increasing, the above operation will be repeated, the alternate impinging of the valve plate 59 against seat rib 61 and stop portion 64 producing a buzzing sound of sufficient intensity to effect the desired warning signal.

In Fig. 5 my invention is shown in another modified form, in which the warning signal, although initiated by the action of fluid under pressure exhausted from the door engine by way of exhaust pipe 36 in the manner hereinbefore described, is effected by means of an electrically illuminated sign, which serves to flash a visible warning to the passengers that the door is about to close. As shown in Fig. 5 of the drawing, a pneumatic switch device 66 is provided, said device containing a movable abutment such as a piston 67, which has at one side a chamber 68 connected by way of the branch pipe T 38 to the exhaust pipe 36 the choke fitting 39 being interposed in said pipe beyond said T 38. The piston 67 has a stem 69, to which is secured a contact member 70, suitable insulating means 71 being interposed between said member and stem. The contact member 70 is adapted to bridge switch terminals 72 when the piston is moved upwardly, said piston being normally urged downwardly by a spring 74. A source of electric current 75 is adapted, when the circuit is completed, to supply current through a signal wire 76 to the filament of a suitable lamp 77, which is arranged to illuminate a sign such as 78. In operation, fluid under pressure discharged from the door engine by way of exhaust pipe 36 as before described builds up sufficient pressure in the chamber 68 of the switch due to the restricted flow through the restricted passage 41 to move piston 67 upwardly until the contact member 70 connects the switch terminals 72, thereby completing the circuit through the lamp 77 and producing the desired visible warning signal.

It will be evident from the foregoing description that by employing the simple and economical means disclosed in my invention in connection with the door controlling equipment of a passenger vehicle, the passengers may be given a timely warning that the door of the vehicle is about to close, so as to ensure the prompt clearing of the door area prior to the closing of the door.

While one illustrative embodiment of the invention has been described in detail, it is not my intention to limit its scope to that embodiment or otherwise than by the terms of the appended claim.

Having now described my invention, what I claim as new and desire to secure by Letters Patent, is:

In a vehicle door controlling equipment, in combination, a door engine having a movable abutment operative by fluid under pressure supplied to one side to open a door and by the fluid under pressure supplied to the opposite side to close the door, a control valve device having a door-open position for supplying fluid under pressure to the door opening side of the movable abutment, and having a door-closed position for supplying fluid under pressure to the opposite side of said abutment and for venting fluid under pressure from said door opening side, a communication through which said control valve device is adapted to vent fluid under pressure from the door-opening side of said door engine to the atmosphere upon movement of said device to the door-closed position, said communication having a choke portion with a restricted flow area for producing a local back pressure in the communication upon fluid under pressure being supplied thereto, and fluid pressure responsive signal means connected to said communication intermediate said choke portion and the door engine.

SIDNEY G. DOWN.