Office de la Propriété Intellectuelle du Canada
Un organisme d'Industrie Canada

Canadian Intellectual Property Office
An agency of Industry Canada

CA 2355597 C 2009/07/07

(11)(21) 2 355 597

(12) BREVET CANADIEN
CANADIAN PATENT

(13) C

(86) Date de dépôt PCT/PCT Filing Date: 2000/02/24
(87) Date publication PCT/PCT Publication Date: 2000/08/31
(45) Date de délivrance/Issue Date: 2009/07/07
(85) Entrée phase nationale/National Entry: 2001/05/10
(86) N° demande PCT/PCT Application No.: US 2000/004976
(87) N° publication PCT/PCT Publication No.: 2000/050110
(30) Priorité/Priority: 1999/02/24 (US09/257,164)

(51) Cl.Int./Int.Cl. *A61M 31/00* (2006.01), *A61J 15/00* (2006.01), *A61M 25/02* (2006.01)

(72) Inventeurs/Inventors:
MEIER, KEVIN C., US;
BODICKY, RAYMOND O., US;
FOURNIE, GLENN G., US;
RANFORD, ALAN, US;
VON DYCK, PETER, US

(73) Propriétaire/Owner:
COVIDIEN AG, CH

(74) Agent: SMART & BIGGAR

(54) Titre : DISPOSITIF DE FIXATION POUR TUBE DE GASTROTOMIE COURT
(54) Title: SECURING DEVICE FOR A LOW PROFILE GASTROSTOMY TUBE

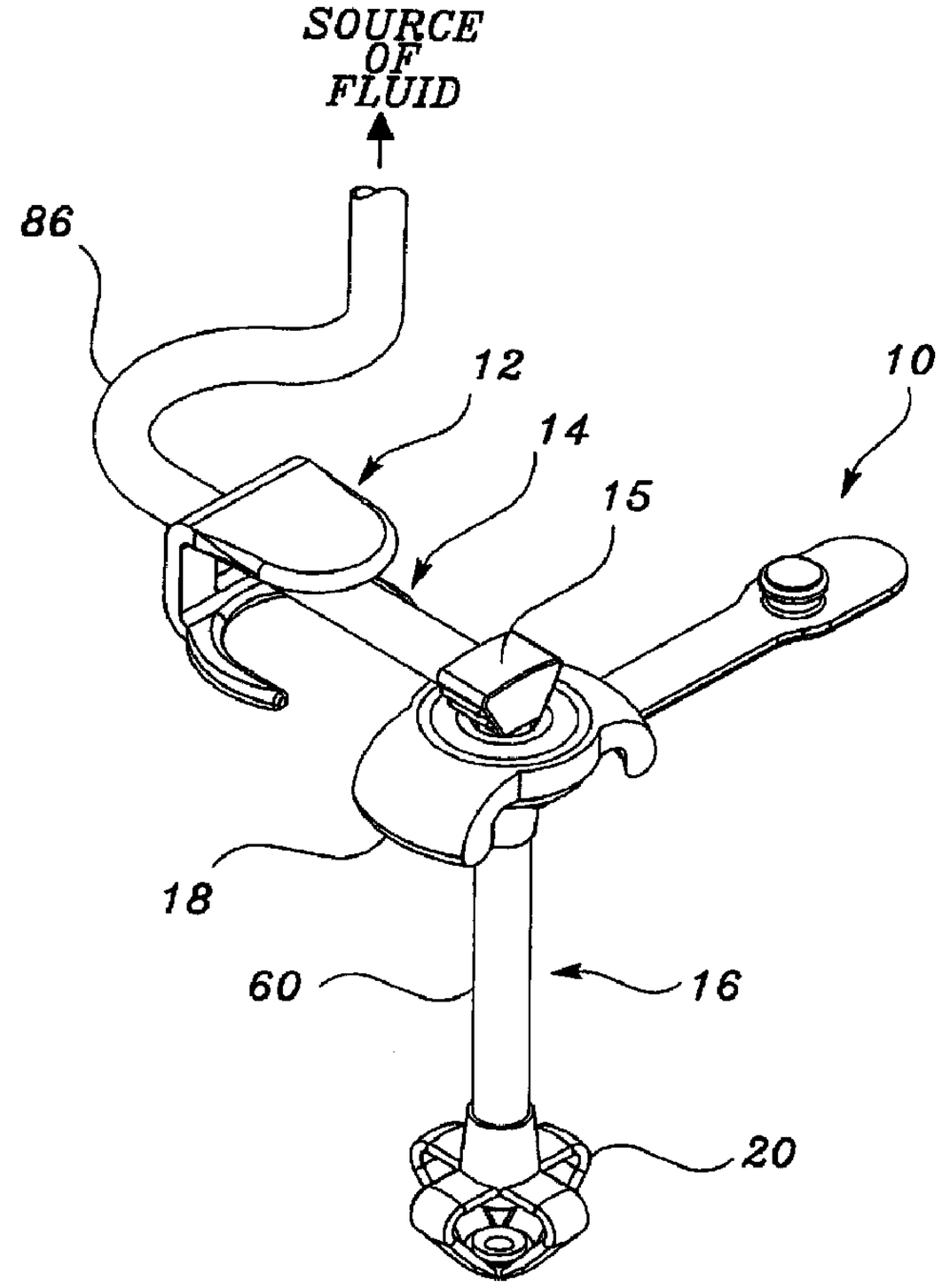

(57) Abrégé/Abstract:
A low profile gastrointestinal tube feeding system (10) having a securing device (12) for securing a feeding set (14) to a low profile gastrostomy tube (16) thereof disposed inside the viscera of a patient's body so that inadvertent removal of the feeding set (14)

CA 2355597 C 2009/07/07

(11)(21) 2 355 597

(13) C

(57) Abrégé(suite)/Abstract(continued):
from the gastrostomy tube (16) is prevented. The feeding set (14) includes hollow tubing (86) connected to a source of fluid at one end and a connection member (15) at the other end (103) for connection to the gastrostomy tube (16) and establishing fluid flow communication with the patient. The low profile gastrostomy tube (16) includes an external retention member (18) having legs (58) that seat and retain the external retention member (18) against the patient's outer body and a tubular member (60) that is disposed inside the stomach or other viscera of a patient. The connection member (15) attaches to the external retention member (18) and is secured thereto using a securing device (12). The securing device (12) includes a top portion (26) and a bottom portion (30) which are adapted to simultaneously engage respective portions of the connection member (15).

PCT WORLD INTELLECTUAL PROPERTY ORGANIZATION
International Bureau

INTERNATIONAL APPLICATION PUBLISHED UNDER THE PATENT COOPERATION TREATY (PCT)

(51) International Patent Classification 7 : A61M 5/32

A1

(11) International Publication Number: **WO 00/50110**

(43) International Publication Date: 31 August 2000 (31.08.00)

(21) International Application Number: PCT/US00/04976

(22) International Filing Date: 24 February 2000 (24.02.00)

(30) Priority Data:
09/257,164 24 February 1999 (24.02.99) US

(71) Applicant *(for all designated States except US)*: THE KENDALL COMPANY [US/US]; 15 Hampshire Street, Mansfield, MA 02048 (US).

(72) Inventors; and
(75) Inventors/Applicants *(for US only)*: MEIER, Kevin, C. [US/US]; 4835 Daltry Court, St. Louis, MO 63129 (US). BODICKY, Raymond, O. [US/US]; 5051 Lampglow Court, St. Louis, MO 63129 (US). FOURNIE, Glenn, G. [US/US]; 5221 White Oak Drive, Smithton, IL 62285 (US). RANFORD, Alan [GB/US]; 40 Patterson Court, St. Louis, MO 63146 (US). VON DYCK, Peter [US/US]; 2907 Eastwind Drive, Fernandina, FL 32034 (US).

(74) Agents: BAI, Ari, M. et al.; Lewis Rice & Fingersh, L.C., 500 North Broadway, Suite 2000, St. Louis, MO 63102 (US).

(81) Designated States: AL, AM, AT, AU, AZ, BA, BB, BG, BR, BY, CA, CH, CN, CU, CZ, DE, DK, EE, ES, FI, GB, GD, GE, GH, GM, HR, HU, ID, IL, IN, IS, JP, KE, KG, KP, KR, KZ, LC, LK, LR, LS, LT, LU, LV, MD, MG, MK, MN, MW, MX, NO, NZ, PL, PT, RO, RU, SD, SE, SG, SI, SK, SL, TJ, TM, TR, TT, UA, UG, US, UZ, VN, YU, ZW, ARIPO patent (GH, GM, KE, LS, MW, SD, SL, SZ, TZ, UG, ZW), Eurasian patent (AM, AZ, BY, KG, KZ, MD, RU, TJ, TM), European patent (AT, BE, CH, CY, DE, DK, ES, FI, FR, GB, GR, IE, IT, LU, MC, NL, PT, SE), OAPI patent (BF, BJ, CF, CG, CI, CM, GA, GN, GW, ML, MR, NE, SN, TD, TG).

Published
With international search report.
Before the expiration of the time limit for amending the claims and to be republished in the event of the receipt of amendments.

(54) Title: SECURING DEVICE FOR A LOW PROFILE GASTROSTOMY TUBE

(57) **Abstract**

A low profile gastrointestinal tube feeding system (10) having a securing device (12) for securing a feeding set (14) to a low profile gastrostomy tube (16) thereof disposed inside the viscera of a patient's body so that inadvertent removal of the feeding set (14) from the gastrostomy tube (16) is prevented. The feeding set (14) includes hollow tubing (86) connected to a source of fluid at one end and a connection member (15) at the other end (103) for connection to the gastrostomy tube (16) and establishing fluid flow communication with the patient. The low profile gastrostomy tube (16) includes an external retention member (18) having legs (58) that seat and retain the external retention member (18) against the patient's outer body and a tubular member (60) that is disposed inside the stomach or other viscera of a patient. The connection member (15) attaches to the external retention member (18) and is secured thereto using a securing device (12). The securing device (12) includes a top portion (26) and a bottom portion (30) which are adapted to simultaneously engage respective portions of the connection member (15).

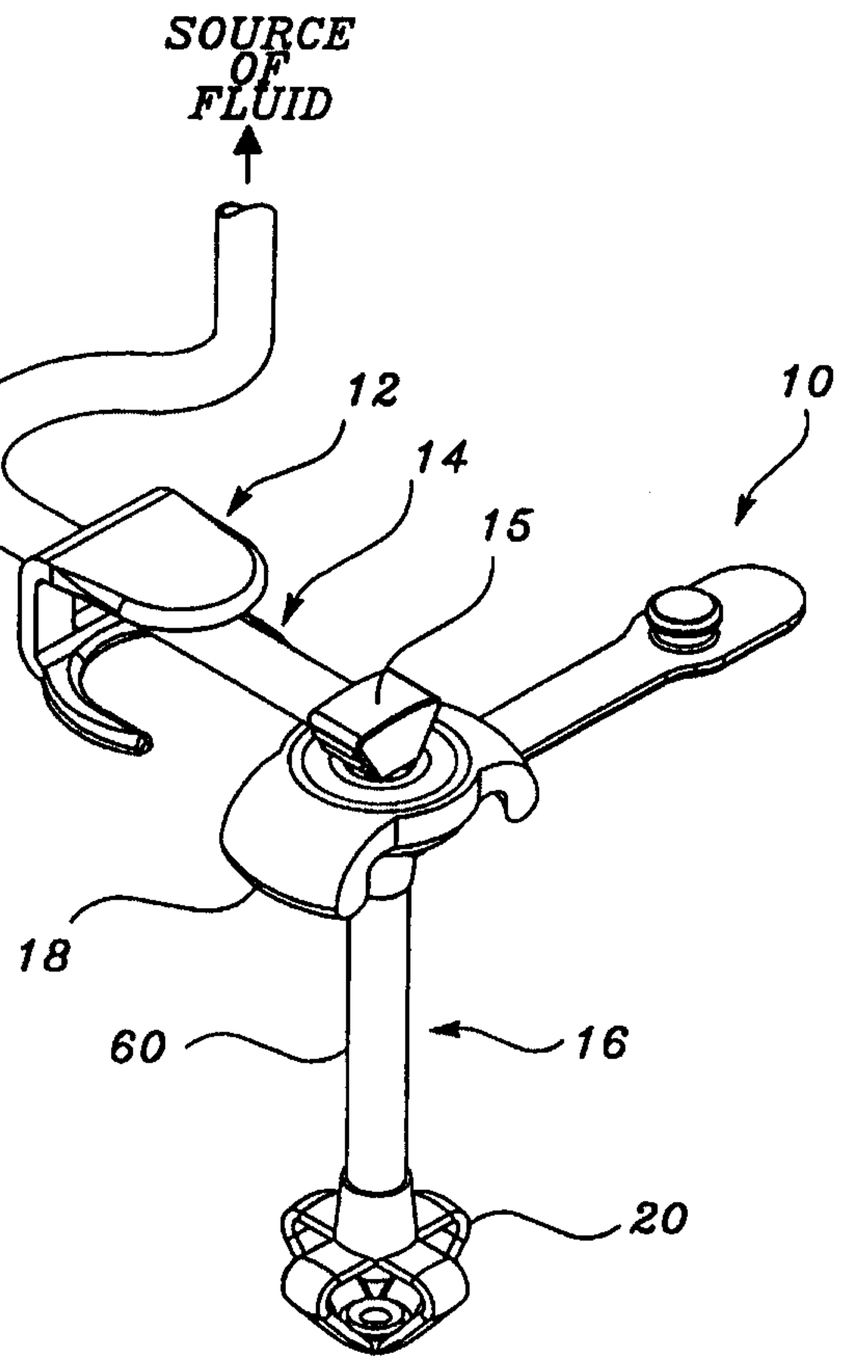

WO 00/50110 PCT/US00/04976

SECURING DEVICE FOR A LOW PROFILE GASTROSTOMY TUBE

BACKGROUND OF THE INVENTION

1. Field of the Invention

The present invention relates to a device for use with gastrointestinal-type tubes, and more particularly to a securing arrangement for use with low profile gastrointestinal feeding systems. More specifically, the present invention relates to a securing device for securing a feeding set to a low profile gastrostomy tube located outside the patient in order to prevent inadvertent removal of the feeding set therefrom.

2. Prior Art

Low profile gastrointestinal feeding systems are frequently used for long term tube fed patients who are ambulatory and/or in a combative state and require some type of gastrostomy device to provide nutrition to a patient unable to take nutrition orally. These gastrointestinal systems comprise a feeding set attached to a source of nutrition at one end and a low profile gastrostomy tube at the other end. The low profile gastrostomy tube is normally inserted through a stoma formed in the patient's abdominal wall utilizing an internal retention member disposed inside a patient's viscera to anchor the free end of the gastrostomy tube inside the viscera. The internal retention member attaches to a distal or free end of the low profile gastrostomy tube to hold and affix a hollow organ of choice, e.g. the stomach, against the posterior abdominal wall of a patient. The hollow organ is so affixed by capturing the organ

wall and abdominal wall between the internal retention member secured inside the organ and an external retention member seated on the outer abdominal wall outside a patient with a hollow tubular member attached between the respective retention members. The tubular member provides a fluid pathway between the feeding set connected to a source of nutrition and the internal retention member disposed inside the patient.

A typical internal retention member is disclosed in U.S. Patent No. 5,248,302 to Patrick et al. entitled "Percutaneous obturatable Internal Anchoring Device" which describes a deformable obturatable internal retention member designed to pass through a stoma formed in a wall of the abdomen and stomach or other viscera of a patient in order to secure the low profile gastrostomy tube within the organ of choice and is herein incorporated by reference in its entirety. The method of using this type of obturatable internal retention member consists of inserting an obturator rod into the lumen of the low profile gastrostomy tube until the rod abuts or engages the distal end of the internal retention member. The internal retention member comprises a plurality of flexible retaining arms attached to the hollow tubular member that mechanically elongate and thereby slenderize the silicone, latex or polyurethane retaining arms to a size about that of the diameter of the tubular member when the obturator rod is pushed axially toward the patient. Such slenderization of the retaining arms allows safe insertion or removal of the tubular member and internal retention member into or from an established, matured stoma of a patient. Such

obturatable internal retention members are currently the most common means used to insert, anchor and secure the low profile gastrostomy tube in a matured stoma of a patient.

After the internal retention member has been inserted inside the stomach, the obturator rod is withdrawn through the tubular member which allows the flexible retaining arms of the internal retention member to assume its preset enlarged shape, thereby retaining the internal retention member inside the stomach so that it cannot be withdrawn back through the stoma. Once the internal retention member assumes its preset enlarged shape the feeding tube with a connection member at one end is attached to the external retention member of the low profile gastrostomy tube in order to establish fluid flow communication between the source of nutrition and the patient's stomach. In this way, nutrition is provided to the patient through the low profile gastrostomy tube. Unfortunately, fluid flow communication between the source of nutrition and the patient may be interrupted by inadvertent removal of the feeding tube from the connection member by a patient in a combative state or a person passing too close to the feeding set, thereby creating a critical situation where the patient may starve from lack of nutrition.

Therefore, there appears a need in the art for a securing device that securely engages the connection member of a feeding set to the external retention member of a low profile gastrostomy tube so that inadvertent removal of the connection member is prevented.

SUMMARY OF THE INVENTION

In brief summary, the present invention overcomes and substantially alleviates the deficiencies in the prior art by providing a low profile gastrointestinal tube feeding system having a securing device for securing a feeding set to a low profile gastrostomy tube thereof disposed inside the viscera of a patient's body so that inadvertent removal of the feeding set from the gastrostomy tube is prevented. The low profile gastrostomy tube feeding system of the present invention is designed to pass through an opening or stoma formed through the wall of the abdomen and stomach or other viscera of a patient. The low profile gastrostomy tube comprises an external retention member which includes a body having opposing legs with an axial passage formed through the body between the two legs. The passage includes a distal opening and a proximal opening. The proximal opening of the external retention member is connected to a hollow tubular member having a distal end and a proximal with a lumen formed between the ends. The distal end of the tubular member is connected to the proximal opening of the external retention member, while the proximal end of the tubular member is attached to an internal retention member disposed inside the patient's stomach or other hollow body organ. The internal retention member comprises a plurality of flexible retaining arms which, in its preset enlarged shape, retains the internal retention member inside the patient by anchoring the retention member to the body organ wall. A connection member,

or adapter, is provided with the feeding set or attaching the feeding set to the low profile gastrostomy tube. The connection member includes a first opening set at a perpendicular angle to a second opening with a lumen formed between the openings. The perpendicular shape of the lumen permits the elongated tube to be attached to the connection member in such a manner that the elongate tube presents a low profile along the patient's body. The second opening of the connection member is attached to the distal opening of the external retention member of the low profile gastrostomy tube. The external retention member provides a means for preventing the low profile gastrostomy tube from inadvertently slipping into the patient's body by using the external retention member as an anchor that retains the distal end of the gastrostomy tube to the outer surface of a patient's abdominal wall. The hollow elongate tube includes first and second ends with a lumen formed between the ends that provides a conduit that supplies nutritional fluid directly to the patient's stomach through the low profile gastrostomy tube disposed therein. The first end of the elongate tube is connected to a source of nutrition, while the second end of the tube is connected to the first opening of the connection member attached to the external retention member. Finally, a securing device is provided for securing the connection member to the external retention member in order to prevent inadvertent removal of the connection member from the external retention member without first physically removing the securing device.

The securing device comprises a body having a top portion, middle portion and bottom portion. The inner surface of the top portion forms a locking tab adapted for engaging and retaining the connection member. The middle portion of the securing device forms an aperture adapted for slidably engaging the elongate tube therethrough, while the bottom portion forms opposing arms which engage grooves formed between the passage and the legs of the external retention member. A retention area adapted for retaining the top portion of the connection member there between as the arms of the bottom portion are concurrently engaging the external retention member is defined between the locking tab and the middle portion of the securing device. During manufacturing, the elongate tube is inserted through the aperture of the securing device so that the securing device slides along the elongate tube. The method for engaging the securing device to the connection member and the external retention device comprises the steps of sliding the securing device along the elongate tube until the opposing arms of the securing device begin to engage respective grooves of the external retention member. As the opposing arms engage the grooves, the locking tab concurrently engages the top outer surface of the connection member which is attached to the external retention member. The locking tab rides over the top outer surface of the connection member until the connection member falls behind the locking tab and becomes recessed in the retention area between the locking tab and the middle portion of the securing device. As the connection member is secured by the

locking tab, the arms of the securing device concurrently engage the grooves of the external retention member until the arms are fully inserted therethrough. Thus, the connection member and the external retention member are secured to one another through the securing device which prevents inadvertent disconnection of the connection member from the external retention member without first disengaging the securing device from either the connection member or the external retention member.

Accordingly, the primary object of the present invention is to provide a securing device for securing a feeding set attached to a low profile gastrostomy tube.

Another object of the present invention is to provide a securing device that secures a feeding set to a low profile gastrostomy tube so that the feeding set cannot be inadvertently removed from the gastrostomy tube without first physically removing the securing device from either the feeding set or the gastrostomy tube. A further object of the present invention is to provide a securing device adapted to simultaneously engage and secure both the feeding set and a low profile gastrostomy tube.

In one aspect, there is provided a device designed to pass through an opening in the wall of the abdomen and stomach or other viscera of a patient, said device comprising: a feeding set, said feeding set including an

elongate tube having one end attached to a source of fluid and another end attached to a connection member; a feeding tube including a tubular member disposed inside the opening of a patient and interposed between an external retention member seated on the outside of a patient and an internal retention member anchored inside the viscera of a patient, said connection member being attachable to said external retention member for establishing fluid flow communication between said source of fluid and a patient; and a securing member having opposed portions and being slidably engaged along said elongate tube, one of said opposed portions securely engaging said connection member and the other of said opposed portions securely engaging said external retention member, whereby said connection member cannot be disengaged from said external retention member without first detaching one of said opposing portions of said securing device from either said connection member or said external retention member.

In another aspect, there is provided a device designed to pass through an opening in the wall of the abdomen and stomach or other viscera of a patient, said device comprising: an external retention member including a body, said body forming a passage therethrough, said passage having a distal opening and a proximal opening; a tubular member having a distal end and a proximal end with a first

lumen formed therebetween, said distal end connected to said proximal opening of said passage; an internal retention member connected to said proximal end of said tubular member for retaining said internal retention member inside a body organ; a connection member that includes a first opening and a second opening with a second lumen formed therebetween, said second opening adapted for connection with said distal opening of said external retention member; an elongate tube having a first end and a second end with a third lumen formed therebetween, said first end connected to a source of fluid and said second end connected to said first opening of said connection member; and a means for simultaneously securing said connection member to said external retention member in such a manner that neither said connection member nor said external retention member may be disengaged from one another without first disengaging said securing device from either said connection member or said external retention member.

In a further aspect, there is provided a method for securing a connection member attached to a hollow external retention member of an internal anchoring device, the internal anchoring device including a hollow tubular member having opposing ends, the tubular member being designed to pass through the wall of the abdomen and stomach or other viscera of a patient, one end of the tubular member is

attached to a hollow internal retention member disposed inside the patient, while the other end of the tubular member is attached to the external retention member retained outside of a patient, the external retention member having one end attachable to the connection member, the connection member including a first opening and a second opening with a first lumen formed therebetween, the first opening being attachable to an elongated tube, the elongated tube having a first end and a second end with a third lumen formed therebetween, the first end connected to a source of fluid and the second end connected to the first opening of the connection member such that fluid flow communication is established between the source of fluid and the internal retention device, and a securing member being slidably engaged along the elongated tube, said securing member including opposed retaining portions for simultaneously retaining the connection member and the external retention member together, the steps of the method comprising: a)engaging the connection member to the external retention member; b)establishing fluid flow communications between the source of fluid and the internal retention member; c)grasping the securing member and sliding the securing member along the elongated tube until one of said opposed retaining portions engages the connection member while the other of said opposed retaining portions engages the external retention member; and d)securing one of said

opposed retaining portions to the connection member while securing the other of said opposed retaining portions to the external retention member such that the connection member cannot be disengaged from the external retention member without first disengaging at least one of said opposed retaining portions.

In yet another aspect, there is provided a securing member adapted to slidably engage along an elongate tube for securing a feeding set to a feeding tube disposed inside the viscera of a patient comprising: a body, having opposed retention portions, one of said opposed retention portions being securely engageable to said feeding set and the other of said opposed retention portions being securely engageable to said feeding tube, so that the feeding set is simultaneously secured to said feeding tube by said securing member and wherein said one of said opposed retention portions includes a tab section adapted to securely engage said connection member to said securing member.

In yet another aspect, there is provided a feeding system comprising: a feeding set, said feeding set including an elongated hollow tube having one end attached to a source of fluid and another attached to a connection member; a feeding tube including a hollow tubular member having an external retention member, said connection member being attachable to said external retention member for establishing fluid flow communication; and a securing member having opposed portions and being slidably engaged along

said elongated tube, one of said opposed portions being slidably engageable with said connection member, while an other of said opposed portions being slidably engagable with said external retention member, wherein said connection member cannot be disengaged from said external retention member without first detaching one of said opposing portions of said securing device from either of said connection member or said external retention member.

In still another aspect, there is provided a device for securing a connection member to a gastrostomy tube, said device comprising: a unitary solid body having a back portion defining an aperture and opposing portions, one of said opposing portions being slidably engageable with the connection member, while another of said opposing portions being slidably engageable with the gastrostomy tube, said gastrostomy tube being slidable through said aperture, said opposing portions including a top portion and a bottom portion, said top portion having a locking tab defining a beveled forward part, flat middle part and straight back part.

In still a further aspect, there is provided a method for securing a connection member attached to a gastrostomy tube, the gastrostomy tube including an external retention member seated outside a patient and a tubular member

insertable through an opening formed through a visceral organ of a patient, a lumen defining a fluid pathway through the gastrostomy tube for providing fluid to the interior of the visceral organ, the connection member being attachable to the external retention member at one end and an elongated tube at the other end thereof, and a securing member being slidably engaged along the elongated tube, the securing member including opposed portions for simultaneously retaining the connection member and the external retention member together, the steps of the method comprising: a)engaging the connection member to the external retention member; b)establishing fluid flow communication between the source of fluid and the gastrostomy tube; c)grasping the securing member and sliding the securing member along the elongated tube until one of said opposed portions engages the connection member while the other of said opposed portions engages the external retention member; and d)securing one of said opposed portions to the connection member while securing the other of said opposed portions to the external retention member such that the connection member cannot be disengaged from the external retention member without first disengaging at least one of said opposed portions.

These and other objects of the present invention are realized in the preferred embodiment of the present

invention, described by way of example and not by way of limitation, which provides for a securing device for a low profile gastrointestinal feeding system that prevents inadvertent removal of the feeding set from the low profile gastrostomy tube.

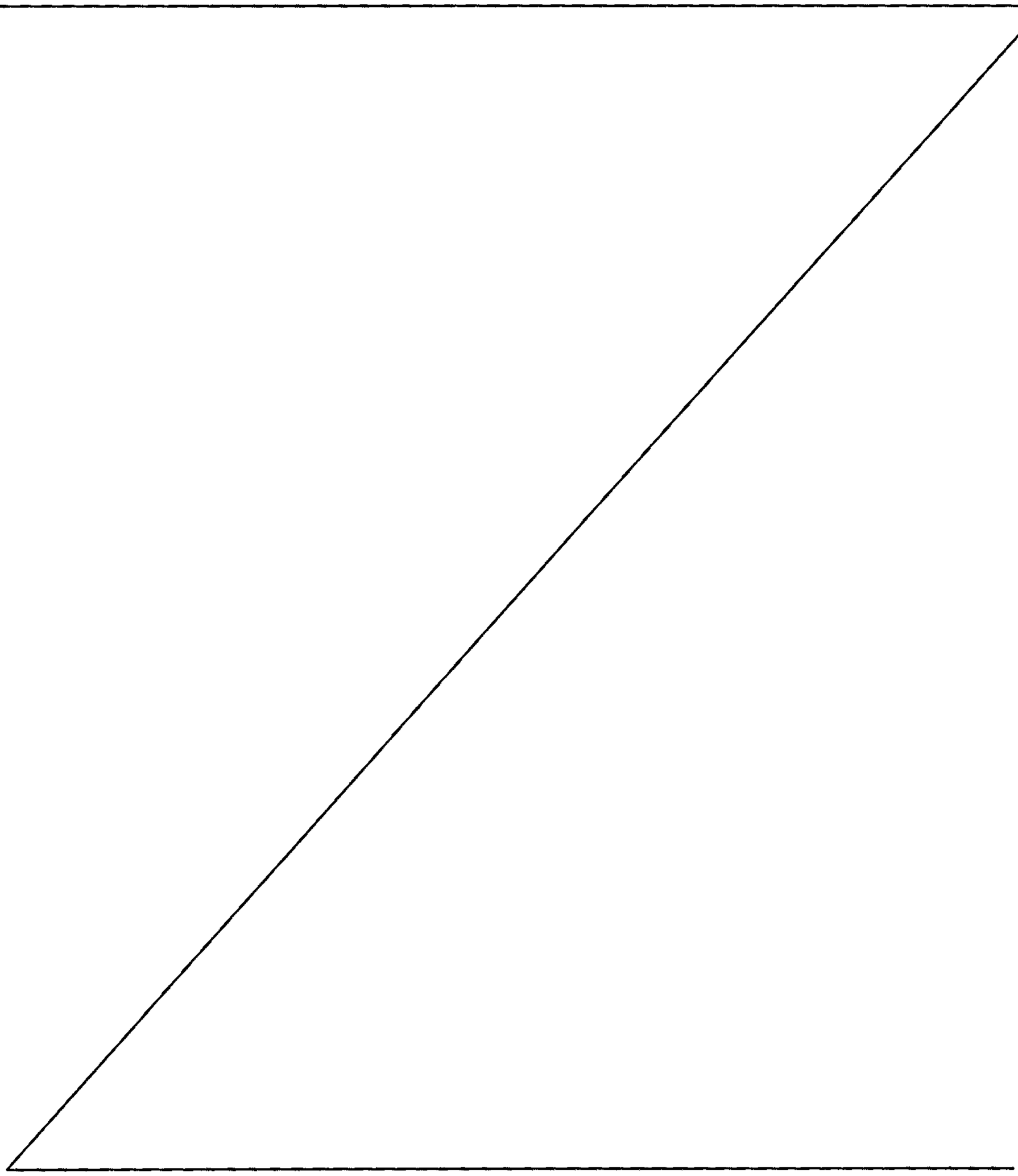

Additional objects, advantages and nove. features of the invention will be set forth in the description which follows, and will become apparent to those skilled in the art upon examination of the following more detailed description and drawings in which like elements of the invention are similarly numbered throughout.

BRIEF DESCRIPTION OF THE DRAWINGS

FIG. **1** is a perspective view of the low profile gastrointestinal feeding system showing the securing device slidably engaged along the elongate tube according to the present invention; FIG. **2** is a perspective view of the securing device according to the present invention;

FIG. **3A** is a top view of the securing device along line **A-A** shown in FIG. **2** according to the present invention;

FIG. **3B** is a bottom view of the securing device along line **B-B** shown in FIG. **2** according to the present invention;

FIG. **3C** is a side view of the securing device along line **C-C** shown in FIG. **2** according to the present invention;

FIG. **4** is an elevated perspective view showing the low profile gastrostomy tube according to the present invention;

FIG. **5** is an isolated side view of the low profile gastrostomy tube passed through an opening in the viscera of a patient according to the present invention;

FIG. **6** is an isolated fragmentary perspective view of the elongate tube attached to a connection member according to the present invention.

FIG. 7 is a side view of the low profile gastrointestinal feeding system showing the securing device in a pre-engagement position according to the present invention;

FIG. 8 is an isolated partial bottom view of the low profile gastrointestinal feeding system along line **D-D** shown in FIG. 7 according to the present invention;

FIG. **9** is a side view of the low profile gastrointestinal feeding system showing the securing device in the engaging position according to the present invention.

FIG. **10** is an isolated partial bottom view of the low profile gastrointestinal feeding system along line **E-E** shown in FIG. **9** according to the present invention.

FIG. **11** is an isolated side view of the low profile gastrointestinal feeding system showing the securing device in a post-engagement position according to the present invention;

FIG. **12** is an isolated partial bottom view of the low profile gastrointestinal feeding system along line **F-F** shown in FIG. **11** according to the present invention;

DETAILED DESCRIPTION OF THE INVENTION

Referring to the drawings, the preferred embodiment of the low profile gastrointestinal feeding system according to the present invention is illustrated and generally indicated as **10** in FIG. **1**. The low profile gastrointestinal tube feeding system **10** comprises a feeding set **14** attached to a low profile gastrostomy tube **16**. The gastrostomy tube **16** includes a tubular member **60** having an external retention member **18** attached at one

end and an internal retention member **20** attached at the other end thereof.

Referring to FIG. **6**, an isolated view of the feeding set **14** is shown. Feeding set **14** comprises a hollow elongate tube **86** with a lumen **100** shown in partial fragmentary section formed through tube **86** having a first end (not shown) and a second end **103**. First end of elongate tube **86** is attached to a source of fluid, for example nutritional supplement, to be supplied to the patient through the low profile gastrostomy tube **16**, while the second end **103** is attached to a connection member **15**. The connection member **15** has a body **89** that includes opposing side grip portions **106** adapted to be gripped between a user's thumb and forefinger when attaching the connection member **15** to either the elongate tube **86** or the low profile gastronomy tube **16**. The body **89** further includes opposing top and bottom portions **90**, **91** and opposing front and back portions **92**, **93**. A horizontal lumen **102** forms a passage through one portion of body **89** and merges with vertical lumen **103** that meets lumen **102** at approximately a **90**-degree angle at an elbow **110**. Lumens **102**, **103** establish a fluid pathway though connection member **15** for the passage of fluid to the low profile gastrostomy tube **16** from the elongate tube **86**. A tubular-shaped vertical extension member **98** extends outwardly from the bottom portion **91** of body **89** along the same downward vertical orientation as lumen **103**. An annular retaining flange **94** is formed around extension member **98** and provides a means of attaching connection member **15** to external retention member **18**, as shall be explained in greater detail

below. Thus, connection member **15** functions as a 90-degree adapter for connecting elongate tube **86** to the external retention member **18** at a low profile in relation to the patient's body.

Referring to FIGS. **1**, **2** and **3A** - **3C**, a securing device **12** according to the present invention is illustrated and provides a means for securing the connection member **15** to the external retention member **18** after attachment of the connection member **15** thereto. The securing device **12** includes a body **22** that forms a top portion **26**, back portion **28** and lower portion **30**. The top portion has a flat outer surface **112** and an inner surface **114** which is in opposed relation to the lower portion **30** and includes a locking tab **24** for engaging and securing the securing device **12** to the connection member **15**. Locking tab **24** includes a beveled forward part **44**, a flat middle part **46** and a straight back part **47**. Beveled forward part **44** forms an angled portion adapted to initially engage and ride over the rear part **93** of connection member **15**. A retention area **116** is provided along inner surface **114** between the back portion **28** and the locking tab **24** of securing device **12** for securely engaging device **12** to connection member **15**. The back portion **28** of securing device **12** forms an aperture **40** adapted to slidably engage the elongate tube **86** therethrough, while the lower portion **30** forms opposing arms **32**, **34** having respective distal tips **36**, **38** which are adapted to engage the external retention member **18**. Preferably, opposing arms **32**, **34** collectively form a generally curved configuration with arms **32**, **34** meeting at an apex **42** located in

the middle of back portion **28**. However, opposing arms **32**, **34** can also form a generally straight parallel configuration.

Referring to FIG. **4**, an isolated perspective view of the low profile gastrostomy tube **16** is shown. The external retention member **18** includes a body **19** comprising a top surface **33** and a bottom surface **35**. The bottom surface **35** forms opposing legs **58** adapted to be seated against the outer abdominal wall of a patient and to also serve to retain and anchor the external retention member **18** thereto when the low profile gastrostomy tube **16** is inserted into a patient" body. The top surface **33** includes an axial passageway **79** through body **19** having a distal **20** opening **81** formed at top surface **33** and a proximal opening **83** (Figure **7**) formed at bottom surface **35**. An annular undercut **74** is formed around the circumference of passageway **79** near the distal opening **81** for engaging either an annular flange **66** of cap member **64** for sealing off passageway **79** or retaining flange **94** for attaching the connection member **15** to the external retention member **18** and establishing fluid flow communication between the source of nutrition and the low profile gastrostomy tube **16**. The engagement of either flange **66** or flange **94** with undercut **74** is preferably a snap fit engagement. However, in the alternative an interference fit or a combination of interference and snap fit engagement is felt to fall within the scope of present invention. Passageway **79** further includes a valve member **48** spaced below undercut **74** and disposed across passageway **79**. Valve member **48** comprises an impermeable barrier having one or more slits **78** which provide an

anti-reflux action that prevents fluid from flowing in a direction opposite that of fluid pathway A illustrated in FIGS. 5 and 7. Affixed or integrally formed with the external retention member **18** is a tethered cap **62** which includes a tether 68 which attaches cap member **64** to external retention member **18**. Cap member **64** has an annular flange **66** adapted to engage undercut **74** when sealing distal opening **81** of passageway **79**. Annular undercut **74** is spaced above and concentrically around valve member **48**.

Top surface **33** of external retention member **18** also includes a retaining ring **72** which surrounds valve member **48** and provides a protective reinforcing structure around valve member **48** against manual deformation. An upper socket **56** is integrally formed with or attached to the proximal opening **82** of external retention member **18** at one end and integrally formed with or attached to the tubular member 60 at the other end thereof.

A bottom view of the external retention member **18** is illustrated in FIG. 8. The bottom surface **35** of external retention member **18** includes an annular body **65** and two generally opposing grooves **70** which are formed between respective legs **58** and annular body **65**. Opposing grooves **70** have a generally curved configuration adapted to engage and secure respective arms **32**, **34** of securing device **12** when device **12** is secured to the external retention member **18** and connection member **15**, as shall be discussed in greater detail later. A plurality of reinforcing members **76** surround annular body **65** and provide structural reinforcement.

Referring back to FIG. **4**, tubular member **60** comprises a lumen **59** shown in partial fragmentary section having a distal end **61** and a proximal end **63**. One end of a lower socket **54** is integrally formed with or attached to the proximal end **63** of tubular member **60**, while the upper socket **56** is integrally formed with or attached to the distal end **61** of tubular member **60**, thereby securing member **60** between the external retention member **18** retained outside the patient and the internal retention member **20** anchored inside the patient. Tubular member **60** provides a conduit for fluid pathway A for delivery of fluid into the patient's stomach or other viscera.

The other end of lower socket **54** is integrally formed with or attached to the internal retention member **20**. Internal retention member **20** comprises a plurality of flexible retaining arms **50** with each arm **50** including a hinge **51** for flexing the internal retention member **20** into a pre-set enlarged shape illustrated in FIG. **4** that prevents the retention member **20** from being withdrawn through the stoma of a patient. The upper part of the retaining arms **50** meet at the lower socket **54** at one end and a grommet **50** formed at the other end. The grommet **50** serves as a fastening support for seating the obturator rod (not shown) during insertion of the low profile gastrostomy tube **16**. The method for inserting and anchoring the low profile -gastrostomy tube **16** using the obturator rod is disclosed in the above referenced U.S. Patent No. 5,248,302 to Patrick et al.

Referring to FIG. **5**, an isolated side view of the low profile gastrostomy tube **16** is shown with the tubular member **60**

inserted through a stoma **88** and into the stomach **84** or other viscera of a patient by via passage **55** formed through the abdominal wall **80** and stomach wall **82** of a patient. The internal retention member **20** attached to the tubular member **60** is shown in its pre-set enlarged position which anchors retaining arms **50** against the stomach lining **82** and prevents withdrawal thereof through passage **55**. Conversely, the external retention member **18** attached to the distal end **61** of tubular member **60** prevents tubular member **60** from inadvertently slipping into passage **55**.

The method for engaging the securing device **12** to both the connection member **15** and the external retention member **18** once the low profile gastrostomy tube **16** has been properly inserted into a patient is illustrated in the sequence of positions shown in FIGS. **7-12**. Referring to FIGS. **7** and **8**, the pre-engagement position of the securing device **12** is shown as device **12** is slidably engaged along elongate tube **86** toward connection member 15 which is attached to external retention member **18**.

In the pre-engagement position, arms **32**, **34** of securing device **12** are generally aligned with respective grooves **70** of external retention member **18**. As the arms **32**, **34** are aligned with grooves **70**, the locking tab **24** of securing device **12** is **15** also aligned with the top portion **90** of connection member **15**. As the user slides the securing device **12** forwardly toward the external retention device **18**, each of tips **36**, **38** engage respective grooves **70** of the external retention member **18**, while

the beveled forward part 44 of locking tab 24 concurrently 20 engages the top portion 90 of connection member 15.

In the engaging position shown in FIGS 9 and 10, tips 36 and 38 have sufficiently entered into grooves 70 so that arms 32, 34 begin to flex as arms 32, 34 follow the slightly curved path formed by respective grooves 70. As arms 32, 34 engage respective grooves 70 the top portion 90 of connection member 15 rides under the beveled forward part 44 of locking tab 24 until portion 90 rides under flat middle part 46.

In the post engagement position of securing device 12 shown in FIGS. 11 and 12, arms 32, 34 have fully engaged grooves 70. While arms 32, 34 become fully engaged in grooves 70, the front portion 90 of connection member 15 passes under the flat middle part 46, until front portion 90 falls behind part 46 and becomes recessed in retention area 116 formed between straight back part 47 and back portion 28 of securing device 12, thereby securely engaging the top portion 90 of device 12 to connection member 15. In the post engagement position, arms 32, 34 have become fully engaged within respective grooves 70 of external retention member 18 and the top portion 90 of connection member 15 is full recessed within retention area 116, thereby fully securing connection member 15 to external retention member 18 to the top and bottom portions 26, 30 of securing device 12. Neither the external retention member 18 nor the connection member 15 may be disengaged from one another without first physically disengaging the securing device 12 from either or both members 15 or 18.

Preferably, the securing device **12** is injection molded from polypropylene or other suitable medical-grade plastic that possesses sufficient flexibility and durability. However, in the alternative, stainless steel or other metal suitable for medical use is also felt to fall within the scope of the present invention.

It should be understood from the foregoing that, while particular embodiments of the invention have been illustrated and described, various modifications can be made thereto without departing from the spirit and scope of the present invention. Therefore, it is not intended that the invention be limited by the specification; instead, the scope of the present invention is intended to be limited only by the appended claims.

WE CLAIM:

1. A device designed to pass through an opening in the wall of the abdomen and stomach or other viscera of a patient, said device comprising:

a feeding set, said feeding set including an elongate tube having one end attached to a source of fluid and another end attached to a connection member;

a feeding tube including a tubular member disposed inside the opening of a patient and interposed between an external retention member seated on the outside of a patient and an internal retention member anchored inside the viscera of a patient, said connection member being attachable to said external retention member for establishing fluid flow communication between said source of fluid and a patient; and

a securing member having opposed portions and being slidably engaged along said elongate tube, one of said opposed portions securely engaging said connection member and the other of said opposed portions securely engaging said external retention member, whereby said connection member cannot be disengaged from said external retention member without first detaching one of said opposing portions of said securing device from either said connection member or said external retention member.

2. The device according to claim 1, wherein said external retention member includes a body, said body forming a passage therethrough and two opposing legs, said two opposing legs forming respective grooves between each of said legs and said passage.

3. The device according to claim 1, wherein one of said opposing portions of said securing member includes two opposing arms and an aperture formed therebetween.

4. The device according to claim 1, wherein said securing member further includes an aperture interposed between said opposing portions.

5. The device according to claim 4, wherein said elongate tube slidably engages said securing member through said aperture of said securing member.

6. The device according to claim 3, wherein said two opposing arms of said securing member are adapted to securely engage said respective grooves of said external retention member when said securing member simultaneously engages said connection member and said external retention member.

7. The device according to claim 1, wherein one of said opposed portions of said securing member includes a retention portion, said retention portion adapted to securely engage said connection member when said securing member is simultaneously engaged to said connection member and said external retention member.

8. The device according to claim 1, wherein a fluid pathway is established between said source of fluid and the free end of said tubular member.

9. The device according to claim 1, wherein said elongate tube attaches to said connection member at a perpendicular relationship with respect to said tubular member.

10. A device designed to pass through an opening in the wall of the abdomen and stomach or other viscera of a patient, said device comprising:

an external retention member including a body, said body forming a passage

therethrough, said passage having a distal opening and a proximal opening;

a tubular member having a distal end and a proximal end with a first lumen formed therebetween, said distal end connected to said proximal opening of said passage;

an internal retention member connected to said proximal end of said tubular member for retaining said internal retention member inside a body organ;

a connection member that includes a first opening and a second opening with a second lumen formed therebetween, said second opening adapted for connection with said distal opening of said external retention member;

an elongate tube having a first end and a second end with a third lumen formed therebetween, said first end connected to a source of fluid and said second end connected to said first opening of said connection member; and

a means for simultaneously securing said connection member to said external retention member in such a manner that neither said connection member nor said external retention member may be disengaged from one another without first disengaging said securing device from either said connection member or said external retention member.

11. A method for securing a connection member attached to a hollow external retention member of an internal anchoring device, the internal anchoring device including a hollow tubular member having opposing ends, the tubular member being designed to pass through the wall of the abdomen and stomach or other viscera of a patient, one end of the tubular member is attached to a hollow internal retention member disposed inside the patient, while the other end of the tubular member is attached to the external retention member retained outside of a patient, the external retention member having one end attachable to the connection member, the connection member including a first opening and a second opening with a first lumen formed therebetween, the first opening being attachable to an elongated

tube, the elongated tube having a first end and a second end with a third lumen formed therebetween, the first end connected to a source of fluid and the second end connected to the first opening of the connection member such that fluid flow communication is established between the source of fluid and the internal retention device, and a securing member being slidably engaged along the elongated tube, said securing member including opposed retaining portions for simultaneously retaining the connection member and the external retention member together, the steps of the method comprising:

a) engaging the connection member to the external retention member;

b) establishing fluid flow communications between the source of fluid and the internal retention member;

c) grasping the securing member and sliding the securing member along the elongated tube until one of said opposed retaining portions engages the connection member while the other of said opposed retaining portions engages the external retention member; and

d) securing one of said opposed retaining portions to the connection member while securing the other of said opposed retaining portions to the external retention member such that the connection member cannot be disengaged from the external retention member without first disengaging at least one of said opposed retaining portions.

12. A securing member adapted to slidably engage along an elongate tube for securing a feeding set to a feeding tube disposed inside the viscera of a patient comprising:

a body, having opposed retention portions, one of said opposed retention portions being securely engageable to said feeding set and the other of said opposed retention portions being securely engageable to said feeding tube, so that the feeding set is simultaneously secured to said feeding tube by said securing member and wherein said

one of said opposed retention portions includes a tab section adapted to securely engage said connection member to said securing member.

13. The securing member according to claim 12, wherein said other of said opposed retention portions engageable to said external retention member includes a pair of opposing arms, said pair of opposing arms being adapted to securely engage said external retention member to said securing member.

14. The securing member according to claim 13, wherein said external retention member defines a pair of grooves adapted to engage said opposing arms therethrough.

15. The securing member according to claim 12, wherein said connection member cannot be disengaged from said external retention member without first disengaging at least one of said retaining portions from said connection member and said external retention member.

16. A feeding system comprising:

a feeding set, said feeding set including an elongated hollow tube having one end attached to a source of fluid and another attached to a connection member;

a feeding tube including a hollow tubular member having an external retention member, said connection member being attachable to said external retention member for establishing fluid flow communication; and

a securing member having opposed portions and being slidably engaged along said elongated tube, one of said opposed portions being slidably engageable with said connection member, while an other of said opposed portions being slidably engagable with

said external retention member, wherein said connection member cannot be disengaged from said external retention member without first detaching one of said opposing portions of said securing device from either of said connection member or said external retention member.

17. The feeding system according to claim 16, wherein said external retention member includes a body, said body forming a passage therethrough and two opposing legs, said two opposing legs forming respective grooves between each of said legs and said passage.

18. The feeding system according to claim 17, wherein said one of said opposing portions of said securing member includes opposing arms and an aperture formed therebetween.

19. The feeding system according to claim 16, wherein said securing member further includes an aperture defined between said opposing portions.

20. The feeding system according to claim 19, wherein said elongated tube slidably engages said securing member through said aperture of said securing member.

21. The feeding system according to claim 18, wherein said two opposing arms of said securing member are adapted to securely engage said respective grooves of said external retention member when said securing member simultaneously engages said connection member and said external retention member.

22. The feeding system according to claim 16, wherein said one of said opposed portions of said securing member includes a retention portion, said retention portion adapted to be slidably engaged to said connection member when the other of said opposed portions is slidably engaged to said external retention member.

23. The feeding system according to claim 16, wherein a fluid pathway is established between a source of fluid and said tubular member.

24. The feeding system according to claim 16, wherein said elongated tube attaches to said connection member at a perpendicular relationship with respect to said tubular member.

25. A device for securing a connection member to a gastrostomy tube, said device comprising:

a unitary solid body having a back portion defining an aperture and opposing portions, one of said opposing portions being slidably engageable with the connection member, while another of said opposing portions being slidably engageable with the gastrostomy tube, said gastrostomy tube being slidable through said aperture, said opposing portions including a top portion and a bottom portion, said top portion having a locking tab defining a beveled forward part, flat middle part and straight back part.

26. A method for securing a connection member attached to a gastrostomy tube, the gastrostomy tube including an external retention member seated outside a patient and a tubular member insertable through an opening formed through a visceral organ of a patient, a lumen defining a fluid pathway through the gastrostomy tube for providing fluid

to the interior of the visceral organ, the connection member being attachable to the external retention member at one end and an elongated tube at the other end thereof, and a securing member being slidably engaged along the elongated tube, the securing member including opposed portions for simultaneously retaining the connection member and the external retention member together, the steps of the method comprising:

a) engaging the connection member to the external retention member;

b) establishing fluid flow communication between the source of fluid and the gastrostomy tube;

c) grasping the securing member and sliding the securing member along the elongated tube until one of said opposed portions engages the connection member while the other of said opposed portions engages the external retention member; and

d) securing one of said opposed portions to the connection member while securing the other of said opposed portions to the external retention member such that the connection member cannot be disengaged from the external retention member without first disengaging at least one of said opposed portions.

27. The device according to claim 25, wherein said one of said opposing top and bottom portions is slidably engageable with said connection member and an other of said opposing top and bottom portions is slidably engageable with said gastrostomy tube, so that the connection member and said gastrostomy tube are simultaneously engaged to one another by said opposing top and bottom portions.

28. The device according to claim 25, wherein said locking tab is adapted to securely engage said connection member to said device.

29. The device according to claim 27, wherein said other of said opposed portions which is engageable to said gastrostomy tube includes a pair of opposing arms, said pair of opposing arms being adapted to securely engage said gastrostomy tube to said connection member.

30. The device according to claim 29, wherein said gastrostomy tube includes an external retention member that defines a pair of grooves adapted to engage said opposing arms.

31. The device according to claim 30, wherein said connection member cannot be disengaged from said external retention member without first disengaging at least one of said opposed retaining portions from said connection member and said external retention member.

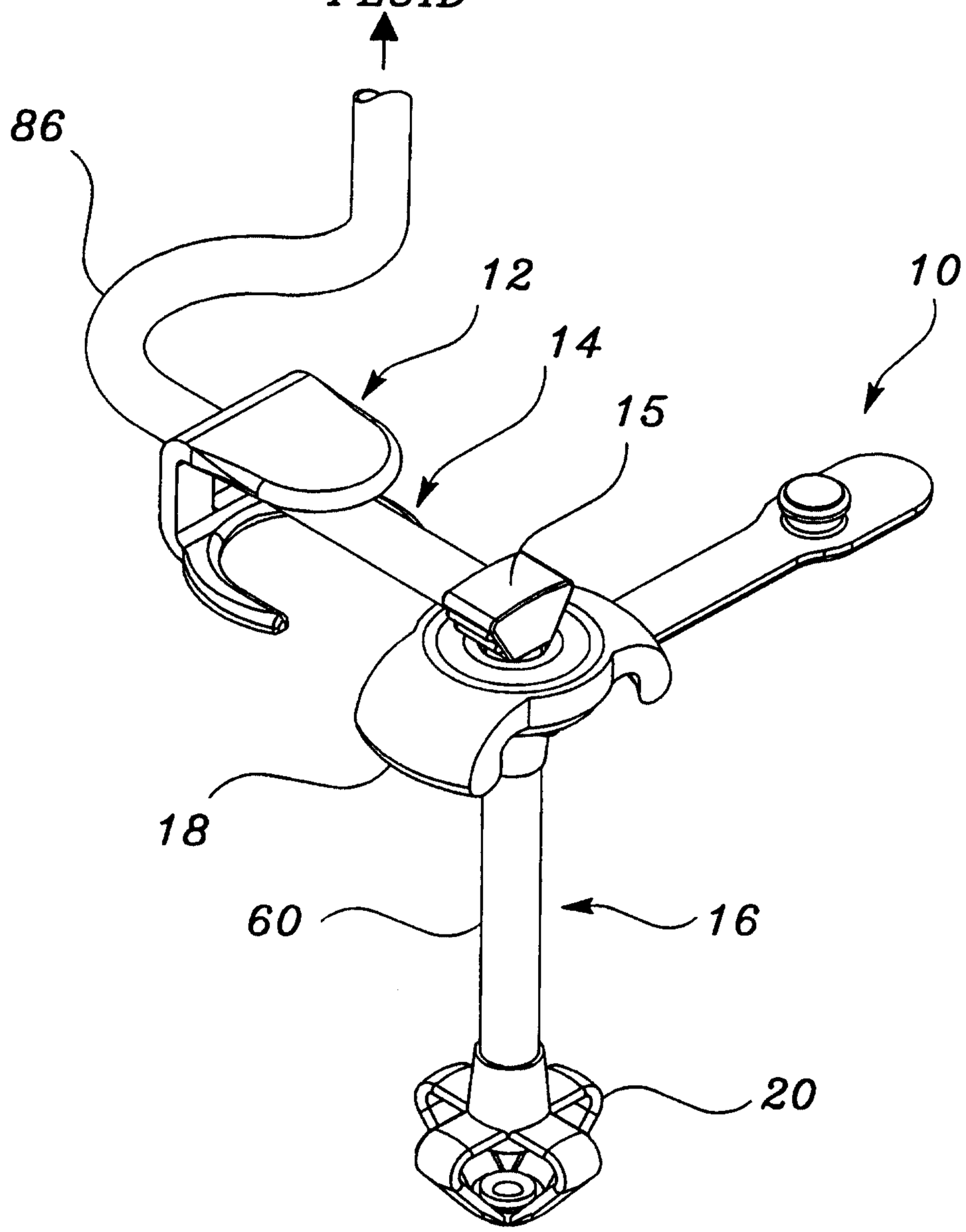

figure 1

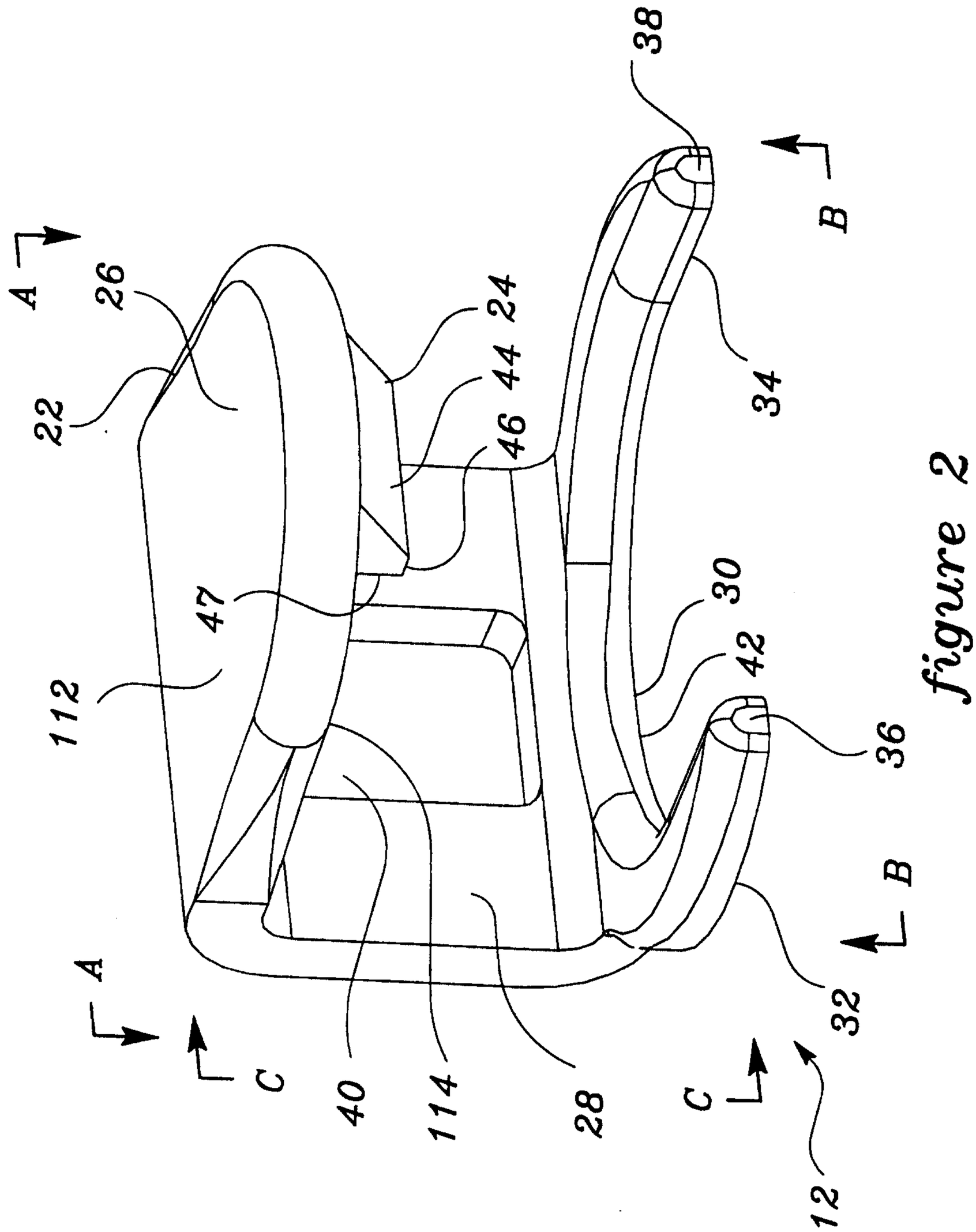

figure 2

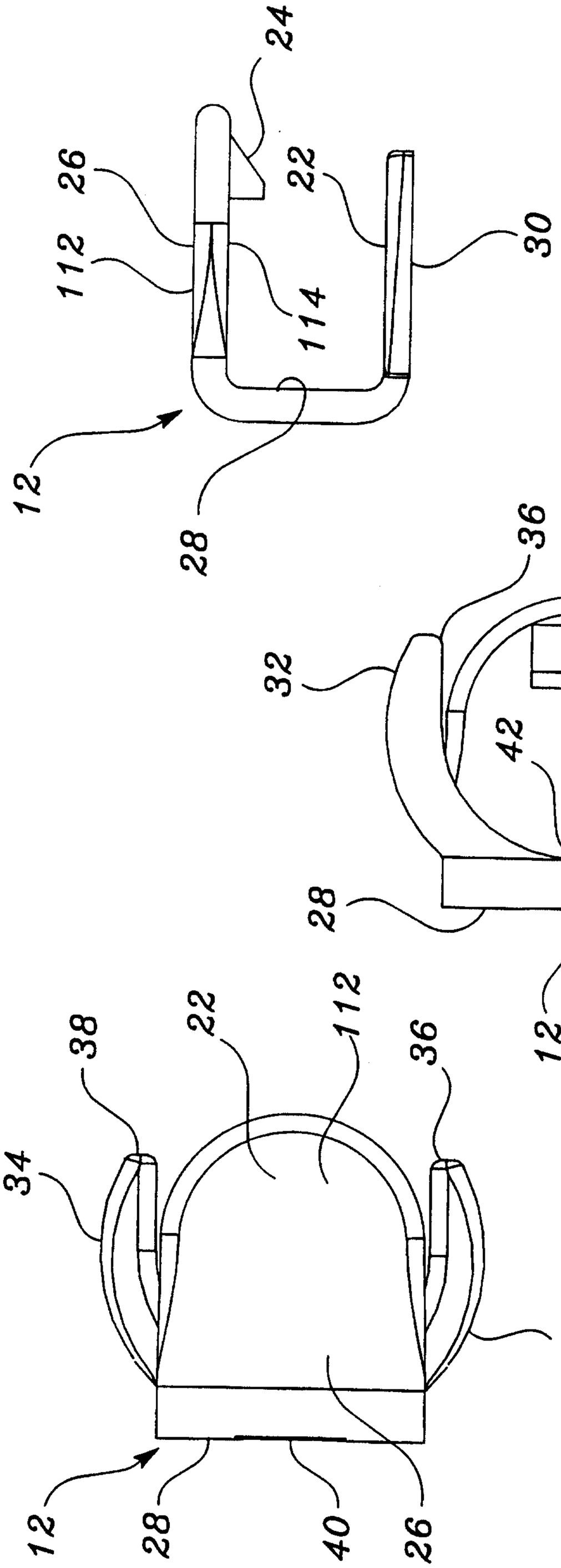

C–C
figure 3c

B–B
figure 3b

A–A
figure 3a

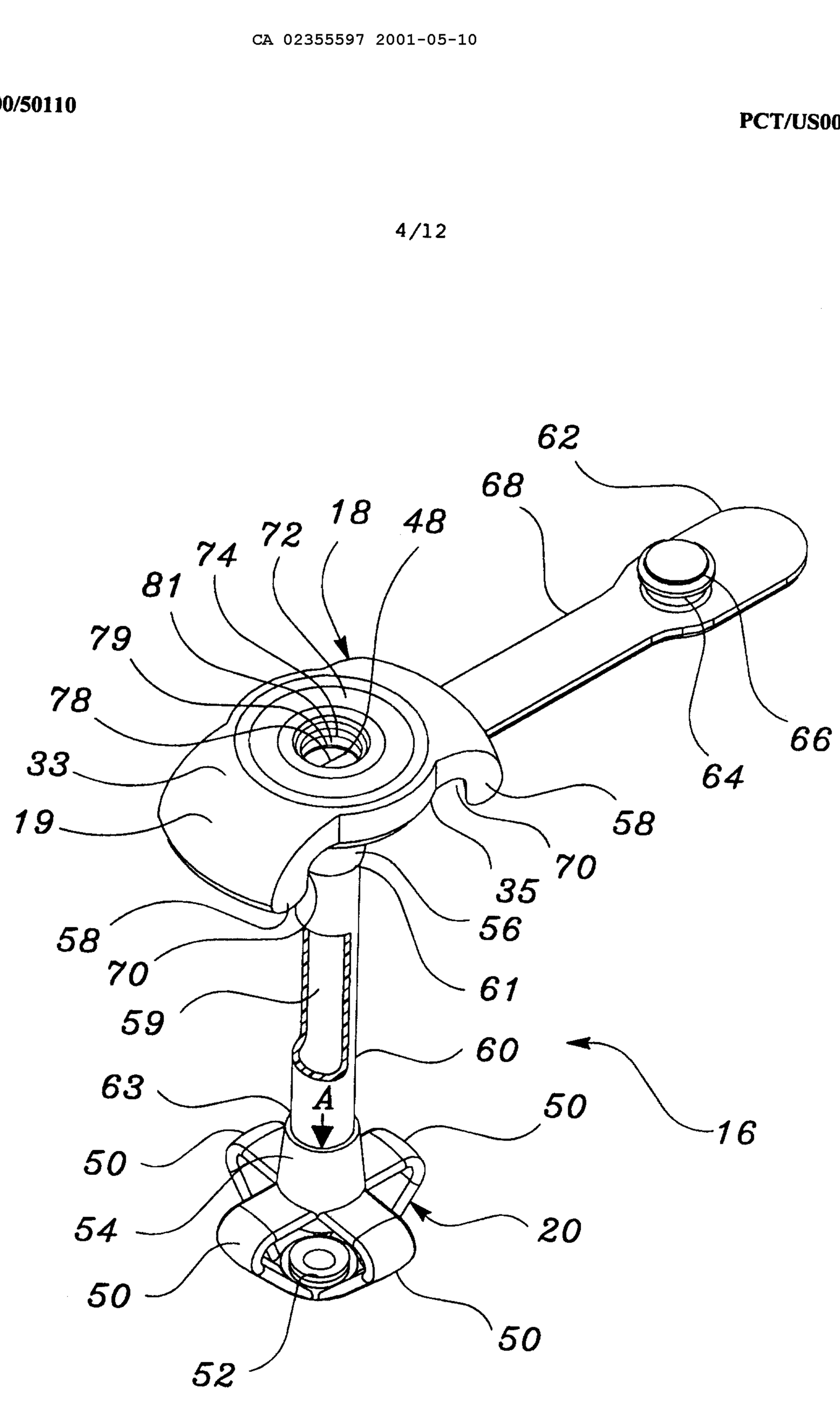
62
68
18
48
74
72
81
79
78
33
19
66
64
58
70
35
56
61
58
70
59
60
63
A
50
16
50
54
20
50
50
52

figure 4

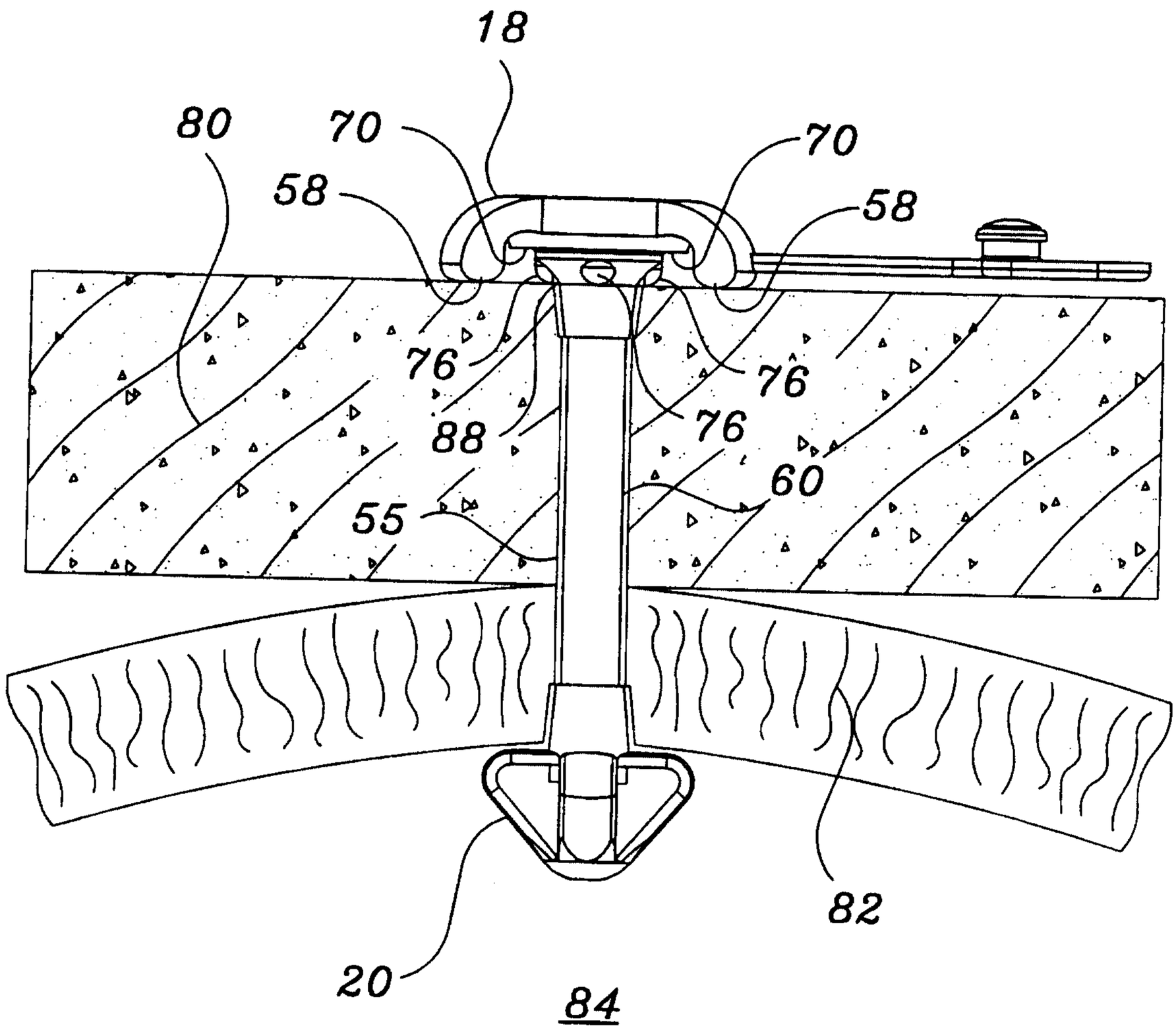

figure 5

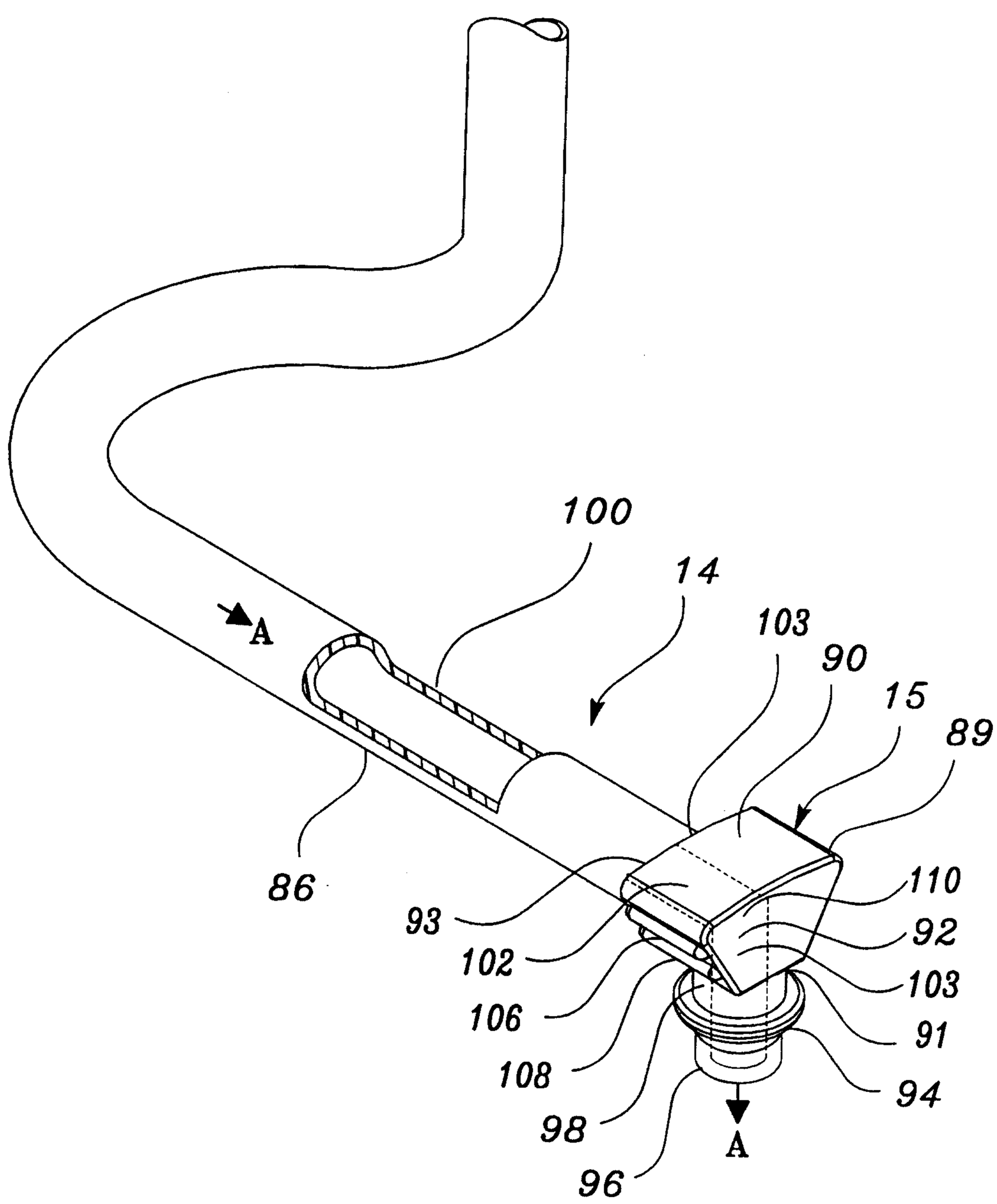
SOURCE OF FLUID
100
14
A
103
90
15
89
86
93
102
106
108
98
96
110
92
103
91
94
A

figure 6

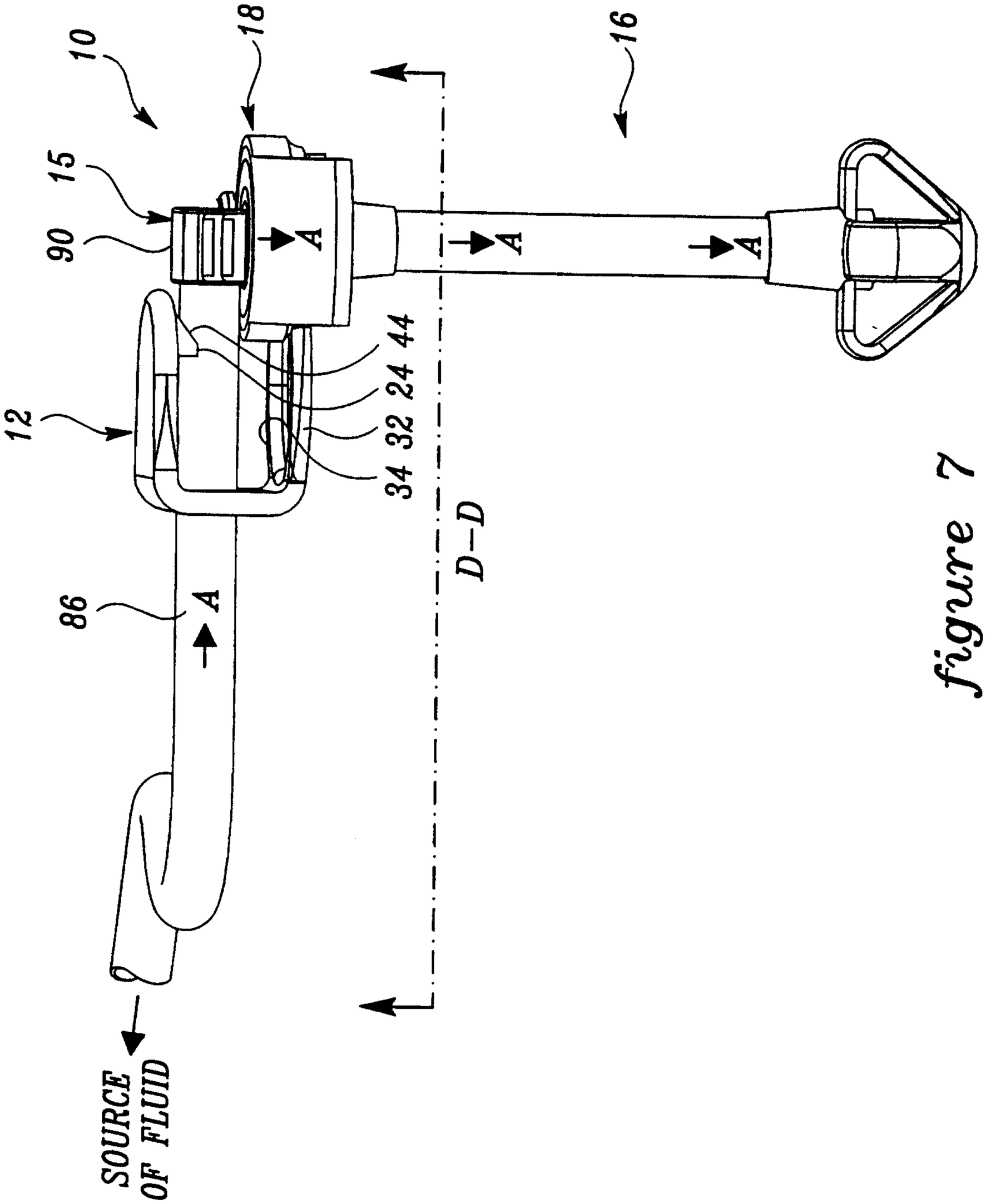

figure 7

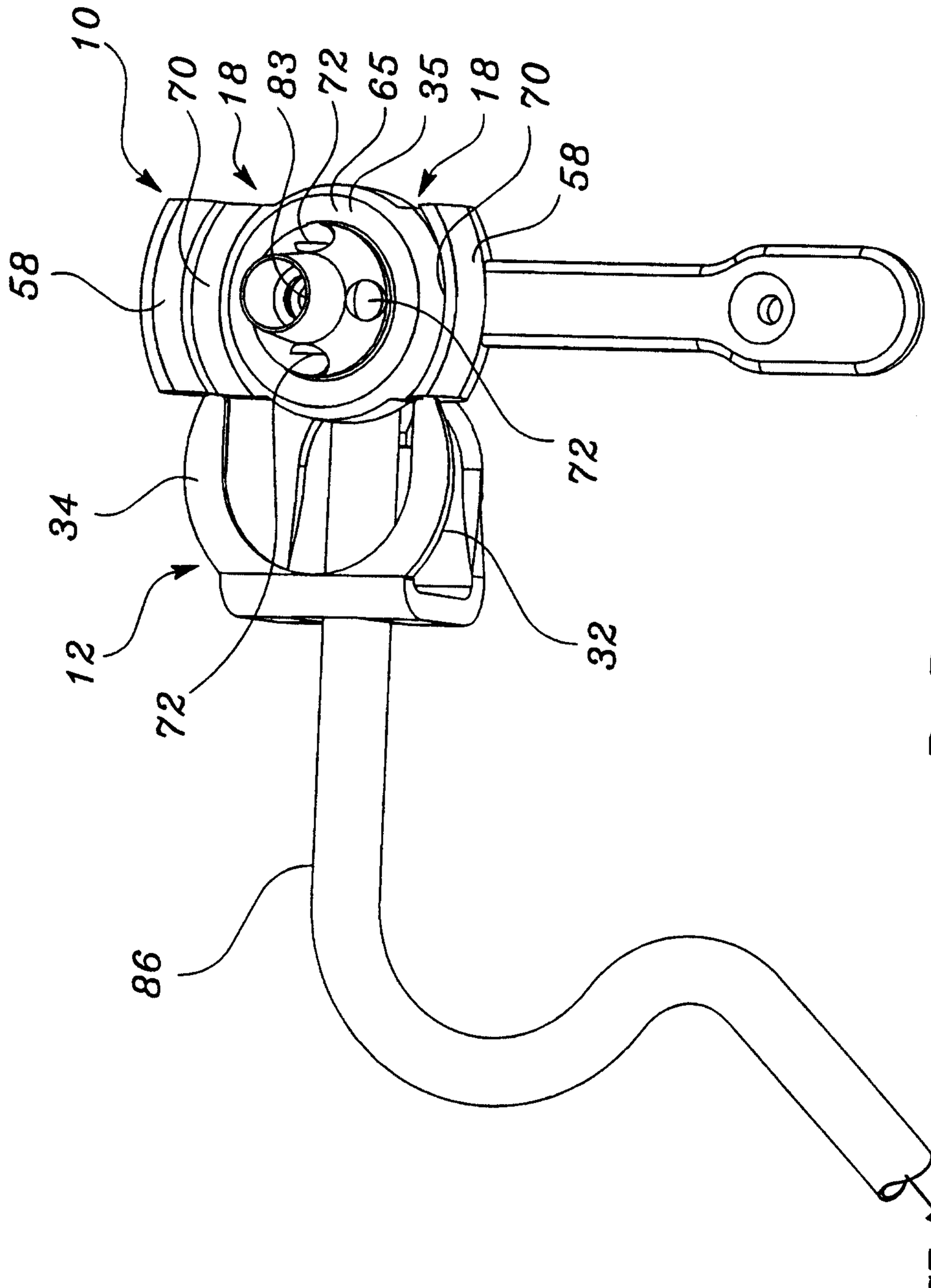

D–D
figure 8

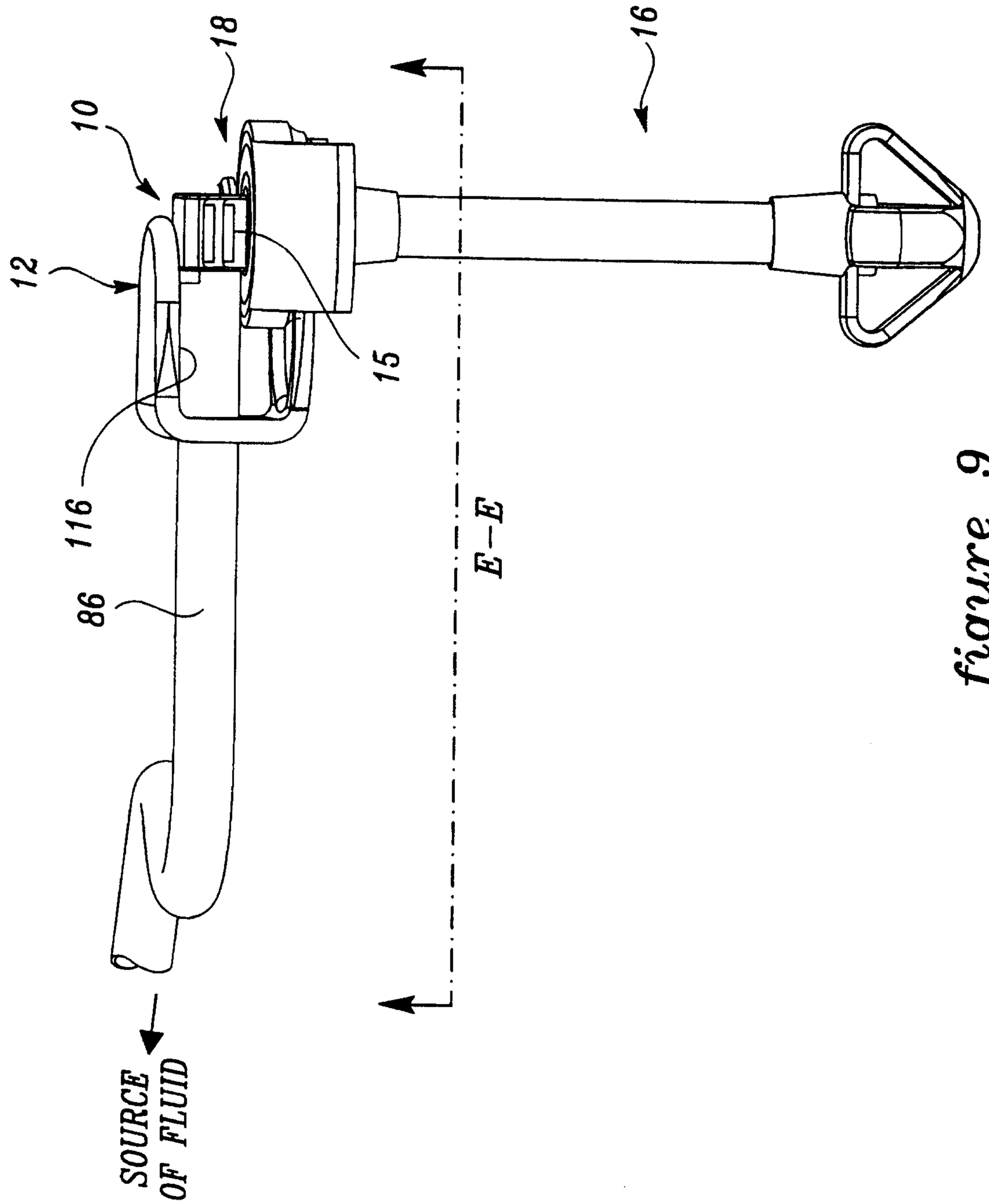

figure 9

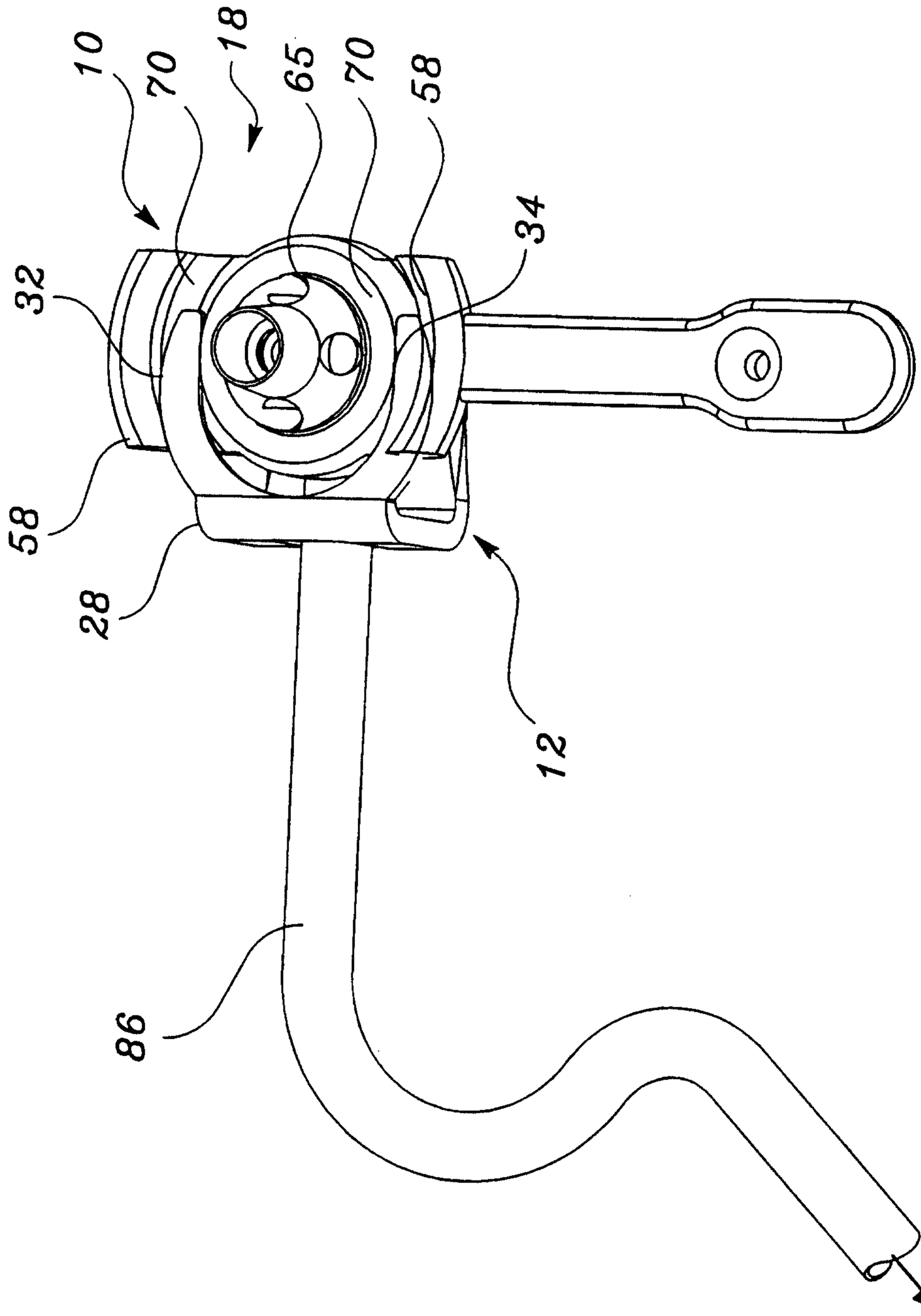

figure 10

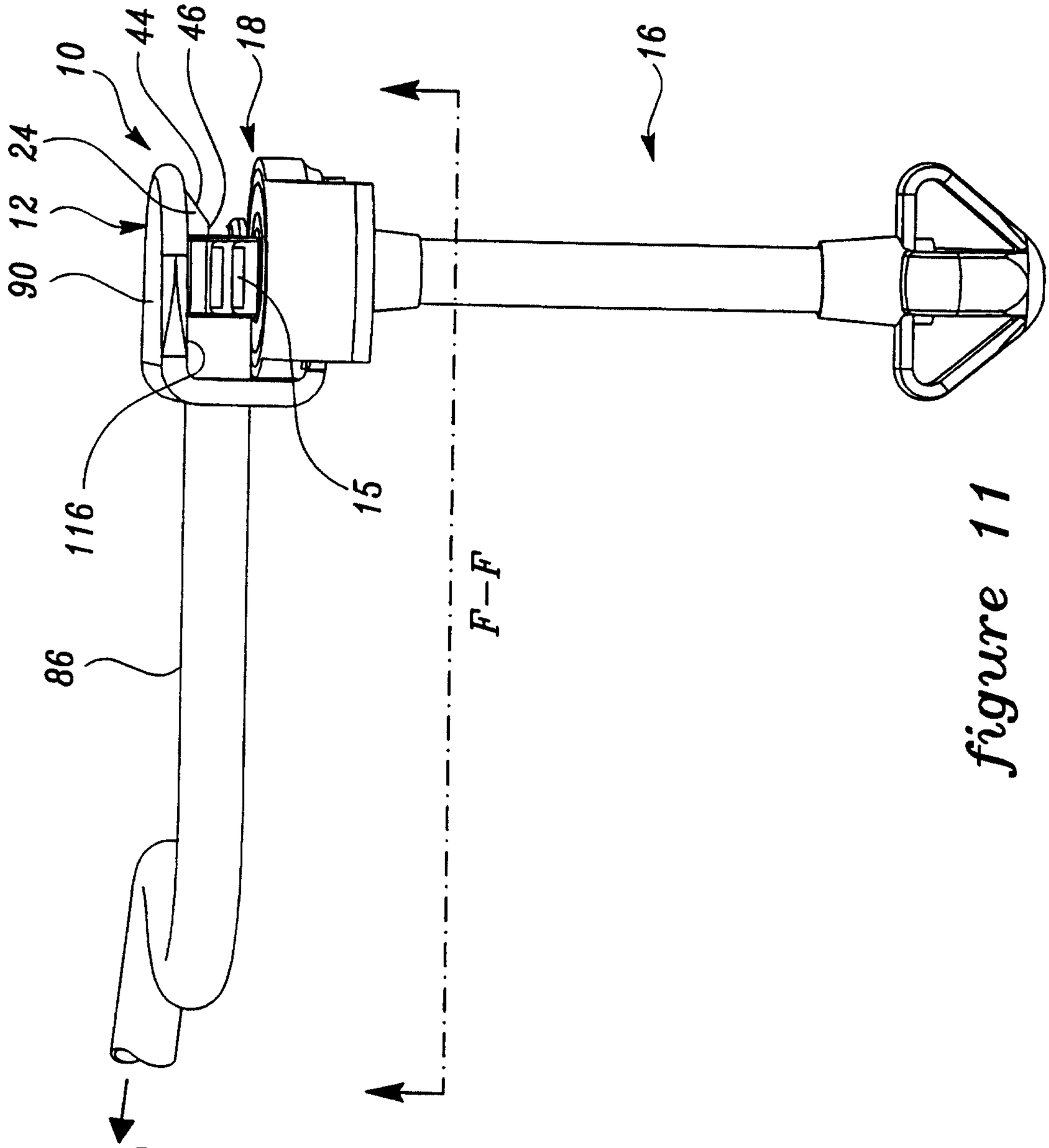

figure

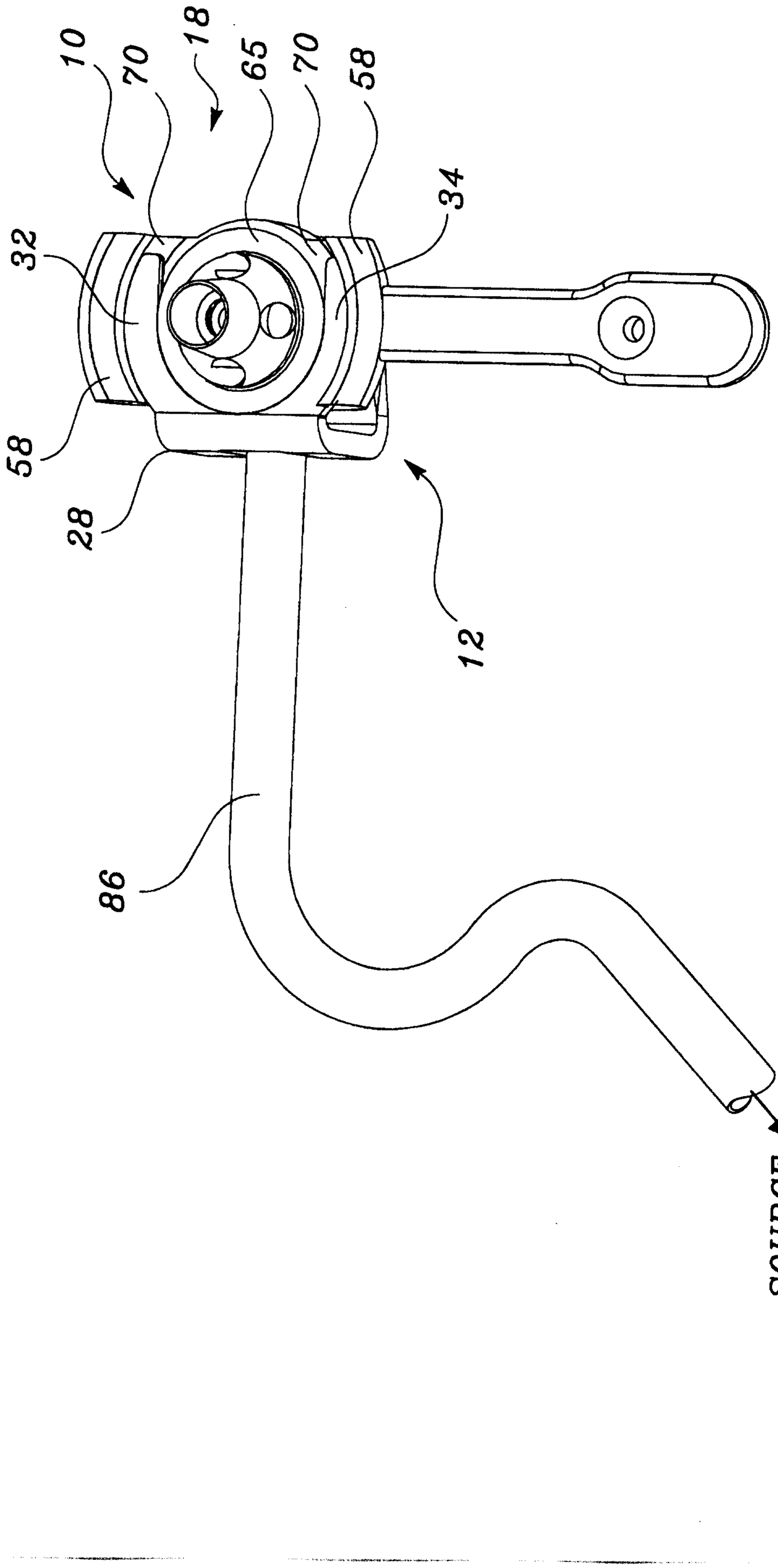

figure 12

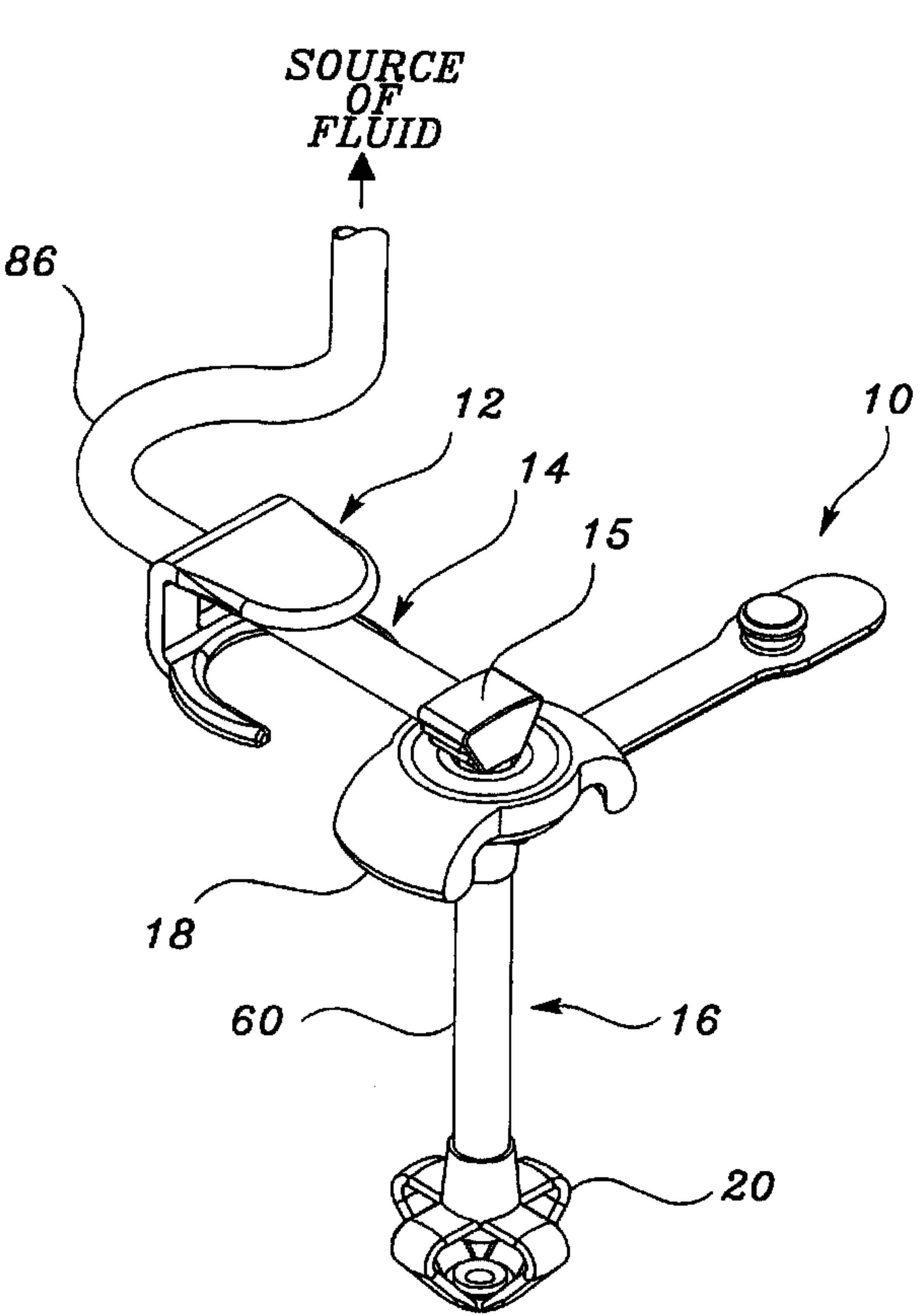
SOURCE OF FLUID
86
12
14
15
10
18
60
16
20