(12) UK Patent Application (19) GB (11) 2 079 984 A

(21) Application No **8117696**
(22) Date of filing **9 Jun 1981**
(30) Priority data
(31) **8004530**
(32) **18 Jun 1980**
(33) **Sweden (SE)**
(43) Application published
27 Jan 1982
(51) **INT CL³**
A61H 31/00 G05D 7/06
(52) Domestic classification
G3R A42 A523 A624
A626 BG29
(56) Documents cited
None
(58) Field of search
A5T
G3R
(71) Applicant
Engstrom Medical Aktiebolag, Adolfsbergsvagen 13, Box 20109, 161 20 Bromma, Sweden
(72) Inventors
Andras Gedeon, Ulf Lundell, Göran Pilenvik
(74) Agents
Forrester, Ketley & Co., Forrester House, 52 Bounds Green Road, London N11 2EY

(54) Improvements in or Relating to a Method and Apparatus for Controlling Lung Ventilators

(57) For the purpose of carrying out an MMV-treatment (Mandatory Minute Volume) by means of a lung ventilator which includes a breathing-gas source (1) from which a patient connected to the ventilator is able to breathe spontaneously through an inspiratory line (4), and a ventilator unit (3) which can be activated by means of a control signal so as to deliver to the patient through the inspiratory line a mandatory breath of determinable tidal volume from the breathing-gas source, the flow of breathing gas through the inspiratory line (4) or expiratory line 7 is continuously sensed by means of a flow meter (9). In a control unit (10) there is generated a signal ($\int(V_r - V_f)$) which is representative of the continuous integral of the difference between a reference signal (V_r) and the flow signal (V_f) from the flow meter. The value of the integrated difference signal is compared with a given limit value (G1). Each time the value of the integrated difference signal reaches the limit value, the ventilator unit (3) is activated to deliver to the patient a mandatory breath of given tidal volume. Alternatively, the ventilator unit (3) may be arranged to deliver to the patient mandatory breaths of a constant given frequency and of a tidal volume whose magnitude is determined with each mandatory breath, by the difference prevailing between the value of the integrated difference signal and the limit value.

Fig.1

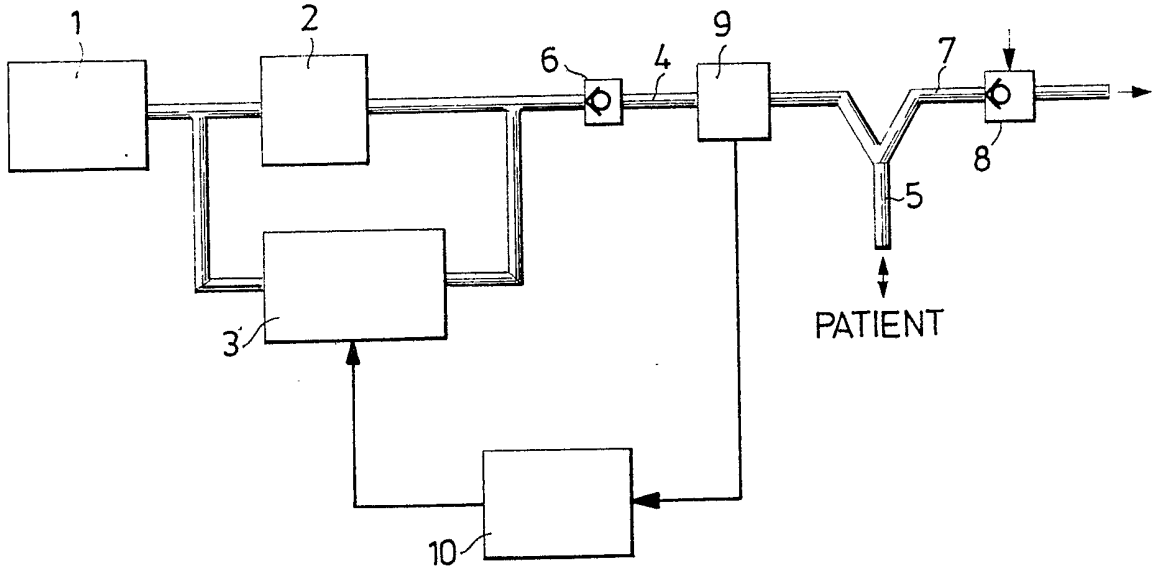

GB 2 079 984 A

Fig.1

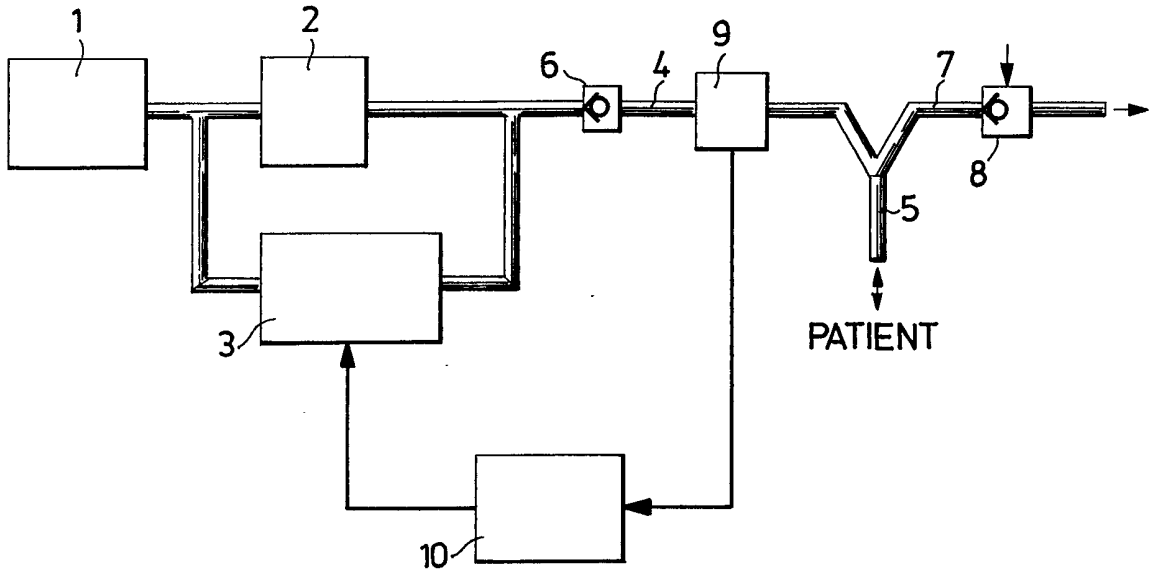
1
2
6
4
9
7
8
5
3
PATIENT
10

Fig.2

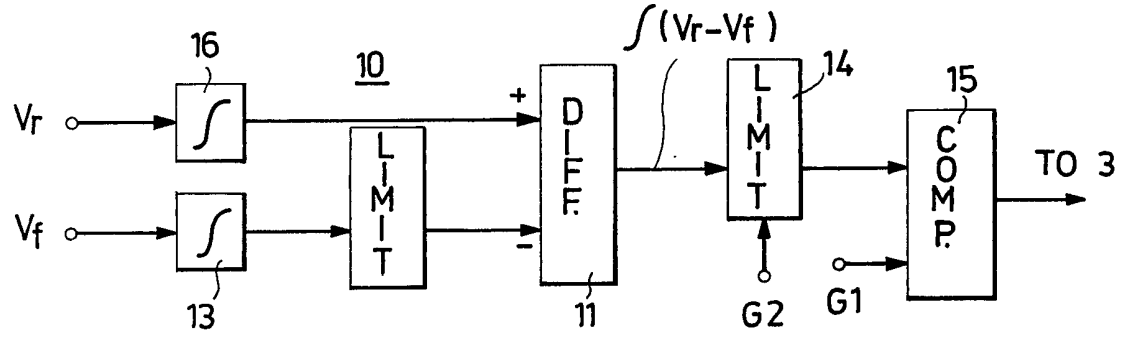
16
10
∫(Vr-Vf)
14
15
Vr
+
D
I
F
F.
L
I
M
I
T
C
O
M
P.
TO 3
Vf
L
I
M
I
T
−
13
11
G2
G1

Fig. 3

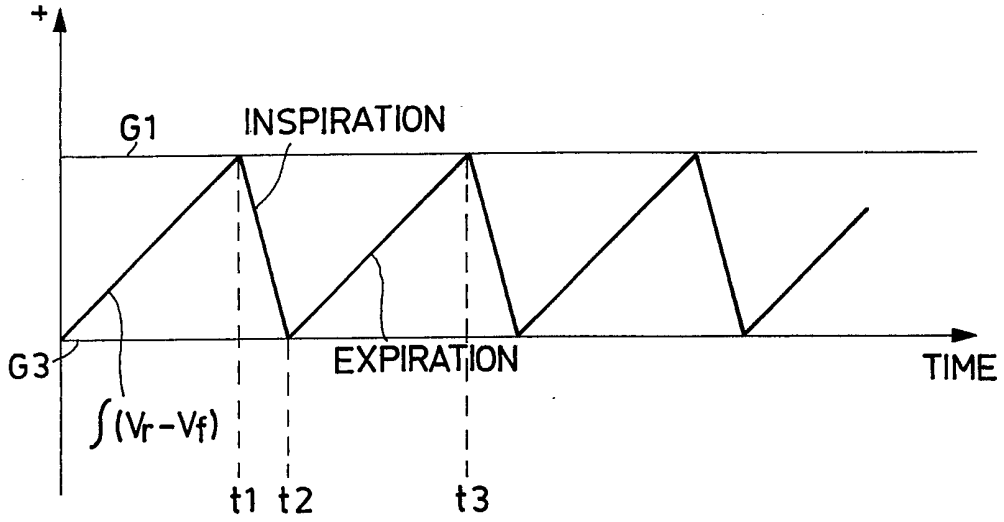
+
G1
INSPIRATION
G3
EXPIRATION
TIME
∫(Vr-Vf)
t1
t2
t3

Fig. 4

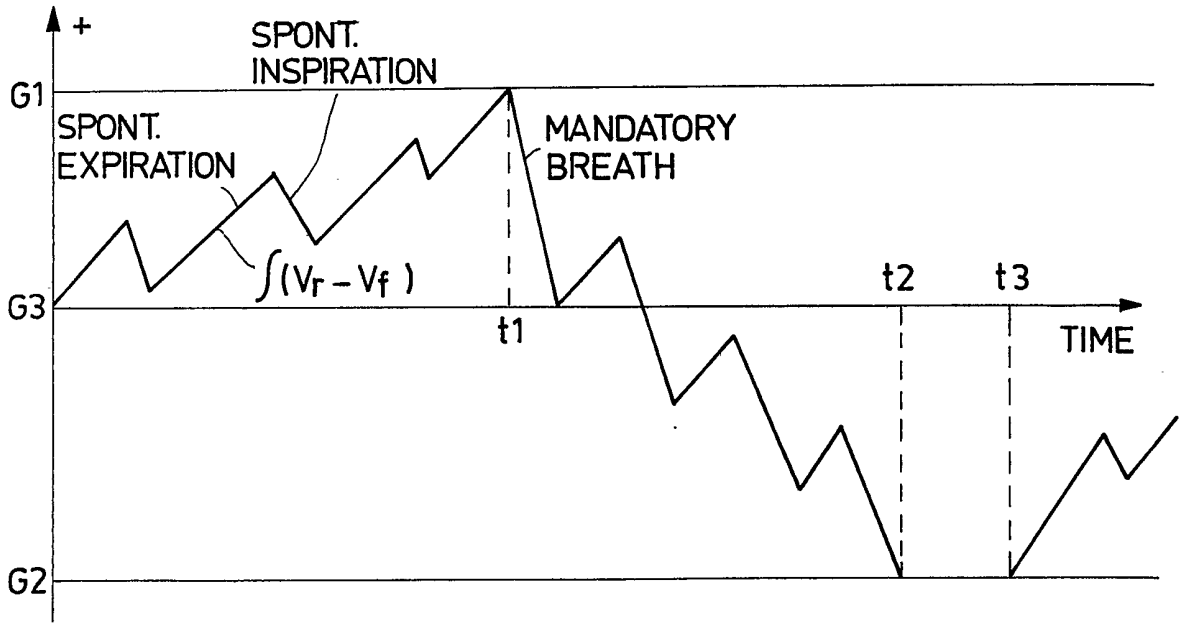
+
SPONT.
INSPIRATION
G1
SPONT.
EXPIRATION
MANDATORY
BREATH
∫(Vr - Vf)
G3
t1
t2
t3
TIME
G2

SPECIFICATION

Improvements in or Relating to a Method and Apparatus for Controlling Lung Ventilators

The present invention relates to a method and a corresponding apparatus for controlling a lung ventilator of the kind which includes a source of breathing gas, an inspiratory line having means for connecting the same to the airways of a patient and through which said patient can breathe spontaneously from said breathing-gas source; a ventilator unit which can be activated to deliver to the patient through said inspiratory line a mandatory breath of determinable tidal volume from said breathing-gas source; and an expiratory line which can be connected to the airways of the patient and through which the patient can exhale.

The most common method of treating a patient by means of a lung ventilator is the so-called CMV method, i.e. controlled mechanical ventilation, in which the patient is subjected to artificial breathing by the lung ventilator, the mandatory breaths applied to the patient being of a given frequency preset in the lung ventilator and each of the breaths comprising a given volume of gas, the so-called tidal volume, which is also preset in the ventilator. In this way, the patient is given by the ventillator a determined volume of breathing gas each minute, the so-called minute volume, which is the product of the frequency of mandatory breaths per minute and the tidal volume. In this method of treatment, the patient is unable to breathe spontaneously and is rendered a completely passive receiver of the ventilation determined by the lung ventilator.

In recent times the view has prevailed wherein, in many respects, it is an advantage to allow the patient to attempt to breathe spontaneously from the breathing-gas source of the lung ventilator, and to support such spontaneous breathing with mandatory breaths applied by the ventilator to the extent that such are required to obtain satisfactory ventilation of the patient. In this way it is possible, among other things to reduce the treatment time and the load on the circulatory system of the patient. The most advanced treatment method of this kind is the so-called SIMV-treatment process, i.e. synchronized intermittent mandatory ventilation, in which, principally, the lung ventilator forces upon the patient mandatory breaths having a tidal volume determined by the lung ventilator and of such low frequency, which is also determined by the ventilator, that the patient is able to breathe spontaneously between said mandatory breaths. By assessing the patient's own ability to breathe spontaneously and by adapting the frequency of the mandatory breaths applied to the patient in respect hereto, it is ensured that the patient obtains the desired total ventilation. One disadvantage with this method of treatment, however, is that the breathing pattern becomes very irregular with respect to frequency and uneven with respect to the size of the breaths. Furthermore, any rapid deterioration of the patient, where the patient suddenly ceases to breathe spontaneously or breathes spontaneously to a far less extent than had been anticipated, will result in dangerous sub-ventilation of the patient. If, on the other hand, the patient quickly improves, such that the patient is able to breathe spontaneously to an extent sufficient to obtain fully satisfactory ventilation, he will, in spite of this, be subjected to mandatory breaths by the lung ventilator, which will disturb the fully satisfactory normal breathing of the patient, thereby to cause the patient discomfort and irritation. In order to avoid these undesirable and, with respect to sub-ventilation, dangerous situations, it is necessary to constantly supervise the patient; such supervision is not readily possible in practical clinical-care situations.

For the purpose of eliminating the disadvantages of the SIMV-treatment method, there was introduced in 1977 a treatment method designated MMV ("Mandatory Minute Volume"), which is described in Anaesthesia, 1977, Vol. 32, pages 163—169, "Mandatory Minute Volume. A new Concept in Weaning from Mechanical Ventilation", A. M. Hewlett, A. S. Platt and V. G. Terry. In this method of treatment the lung ventilator determines the total ventilation of the patient, i.e. the gas volume supplied to the patient per minute, i.e. the minute volume. Provided that the patient is able to spontaneously breathe this minute volume, he or she is not subjected to mandatory breathing by the lung ventilator. If, on the other hand, spontaneous breathing by the patient falls beneath the given minute volume, the lung ventilator applies mandatory breaths to the patient with a tidal volume determined by the ventilator, so that the patient obtains the whole of the pre-determined minute volume. Known apparatus with which such MMV-treatment methods are carried out comprise a ventilator unit and an expandable vessel to which breathing gas is continuously supplied in an amount corresponding to the desired total ventilation of the patient, i.e. the minute volume, and from which the patient can breathe spontaneously. If the patient is unable to breathe the whole of the amount of gas supplied spontaneously, the expandable vessel will eventually become filled to its maximum volume, whereafter surplus breathing gas which the patient is unable to inspire spontaneously is passed over to the ventilator unit and collected therein. When, in this way, there has been collected in the ventilator unit a volume of gas corresponding to the pre-determined tidal volume for a mandatory breath, a mandatory breath of said tidal volume is supplied to the patient by the ventilator unit. In this way, the patient is always supplied with the pre-determined minute volume of breathing gas, either by spontaneous breathing from the expandable vessel or in the form of mandatory breaths from the ventilator unit.

The known practical realization of the MMV-method is encumbered, however, with both practical and principle disadvantages. Thus, when

breathing spontaneously the patient is unable to inspire more gas than the pre-set minute volume, since all of the gas contained in the vessel will be consumed thereby. This is a serious disadvantage, since usually the level of total ventilation is preset to a level slightly beneath the level of "normal" ventilation, so that the patient is, in this way, stimulated into attempting to breathe naturally, thus, it is expected that the patient will be able to reach the set ventillation level, i.e. the set minute volume, and while doing so the patient will occasionally exceed this level. The volumetric capacity of the expandable vessel will, in this respect, determine whether, and for how long, the patient can obtain a greater minute volume than the set minute volume, by spontaneous breathing. If the volumetric capacity of the vessel is small, it will be rapidly emptied and the aforementioned time period will be very short. If a vessel of large volumetric capacity is used, the patient is able to inspire spontaneously a greater amount of gas than that corresponding to the set minute volume over a somewhat longer time period before the vessel is emptied. If, however, after the vessel has been completely emptied, the patient then suddenly ceases to breathe spontaneously, a correspondingly long time is required to fill the vessel to its maximal capacity and to pass enough gas to the ventilator unit so that a mandatory breath can be delivered to the patient. Thus, under these conditions, the patient must wait a relatively long time for the first mandatory breath, which can result in serious complications.

Known lung ventilator constructions for MMV-treatment have also two more fundamental disadvantages. One of these disadvantages is that the guaranteed ventilation of the patient is always the same as the pre-set minute volume of breathing gas supplied to the expandable vessel. Other more suitable physiological magnitudes, such as for example the alveolar ventilation, can not be utilized for setting or varying the applied minute volume. The other disadvantage is related to an objection sometimes raised to the use of the MMV-treatment method, namely that a patient may pant, i.e. take very shallow breaths at high frequency. In such a case the patient may receive by spontaneous breathing a total amount of gas which appears satisfactory, i.e. reaches the pre-set minute volume, without the patient actually being able to absorb a sufficient amount of oxygen and to get rid of his or her carbon dioxide, i.e. to obtain a really satisfactory ventilation. These problems cannot be eliminated with the known lung ventilator constructions for MMV-treatment.

Consequently, an object of the present invention is to provide a novel method and a corresponding apparatus for controlling a lung ventilator for carrying out MMV-treatment method, which are not encumbered with the aforementioned disadvantages.

According to this invention there is provided a method of controlling a lung ventilator which includes a source of breathing gas, an inspiratory line having means for connecting the same to the airways of a patient and through which said patient can breathe spontaneously from said breathing-gas source; a ventilator unit which can be activated to deliver to the patient through said inspiratory line a mandatory breath of determinable tidal volume from said breathing-gas source; and an expiratory line which can be connected to the airways of the patient and through which the patient can exhale, wherein the flow of breathing gas through the inspiratory line or the expiratory line is continuously sensed and a signal representative of the momentary value of said flow is generated; a signal is generated which is proportional to the continuous integral of the difference between a reference signal and said flow signal with consideration being taken to the sign of the signal difference; the value of the integrated difference signal is compared with a first given limit value and the ventilator unit is activated to deliver a mandatory breath to the patient in dependence on the result of said comparison.

In a preferred embodiment of the invention the ventilator unit is activated to deliver a mandatory breath of given tidal volume to the patient each time the value of the integrated difference signal reaches said first limit value.

The invention also provides an arrangement for controlling a lung ventilator comprising a breathing gas source, an inspiratory line which can be connected to the airways of a patient and through which the patient can breath spontaneously from said breathing-gas source, a ventilator unit capable of being activated in response to a control signal to deliver to the patient through said inspiratory line a mandatory breath of determinable tidal volume from said breathing-gas source, and an expiratory line which can be connected to the airways of the patient and through which the patient can exhale, wherein said arrangement comprises a flow meter for continuously sensing the flow of breathing gas through the inspiratory line or the expiratory line and generating a signal representative of the momentary values of said flow; means arranged to generate a signal representative of the continuous integral of the difference between a reference signal and said flow signal and means arranged to compare the value of the integrated difference signal with a first limit value and to generate said control signal for the ventilator unit in dependence on said comparison.

The invention is not limited to any specific structural design of the actual lung ventilator, but can be applied with any type of lung ventilator which permits spontaneous breathing of the patient and which comprises an electrically controllable ventilator unit which can be activated in response to an electric control signal to deliver a mandatory breath of desired tidal volume to the patient, and in which it is possible to continuously measure the magnitude of the flow of breathing gas being received by said patient.

The invention will now be described in more detail by way of example with reference to the accompanying drawing, in which:

Figure 1 illustrates by way of example a simplified block diagram of a lung ventilator constructed in accordance with the invention.

Figure 2 is a more detailed block diagram of the control unit according to the invention incorporated in the lung ventilator according to Figure 1;

Figure 3 is a curve illustrating the mode in which the lung ventilator operates when the patient does not breathe spontaneously at all; and

Figure 4 is a corresponding curve illustrating the mode in which the lung ventilator operates when the patient breathes spontaneously.

The lung ventilator illustrated very schematically in Figure 1 comprises, in a conventional manner, suitable breathing-gas source 1 which is connected to an inspiratory line 4 via a spontaneous-breathing unit 2 and a ventilator unit 3. The inspiratory line 4 in connected to a patient hose 5 which can be connected to the airways of the patient. The inspiratory line 4 includes a suitable inspiratory valve 6 which enables gas to flow through the line 4 towards the patient in only one direction. Also connected to the patient hose 5 is an expiratory line 7 which includes a suitable expiratory valve 8 which will only allow gas to flow through the line 7 in a direction away from the patient. The expiratory valve 8 is suitably controlled in a manner such that it can only be opened when the patient breathes out. The inspiratory line 4 includes a flow meter 9 of suitable design, for example in the form of a constriction and means for measuring the drop in pressure across said constriction, which generates an electric output signal which represents the momentary value of the gas flow through the inspiratory line 4 and the purpose of which will be explained in more detail hereinafter.

The spontaneous-breathing unit 2 and the ventilator unit 3 may be of any known suitable design which enables the patient to obtain breathing gas from the source 1 by spontaneous breathing through the spontaneous-breathing unit 2 under given desired conditions, for example, a given pressure, and such that the ventilator unit 3 can be activated by means of an electrical control signal, to deliver to the patient a mandatory breath of desired gas volume, i.e. tidal volume, and in a desired manner, for example with respect to the time-function of gas flow and/or gas pressure during the mandatory breath. The spontaneous-breathing unit 2 and the ventilator unit 3 are normally incorporated in a single unit in the lung ventilator. A lung ventilator which can be used in conjunction with the present invention is described, for example, in the Swedish Patent Application 7905509-1, to which reference is made herewith. This lung ventilator enables a patient connected thereto to breathe spontaneously at, for example, a desired adjustable continuous positive airway pressure, CPAP, and can also be activated to deliver to the patient a mandatory breath with a desired, variable tidal volume and a desired, setable time function of flow and/or pressure during the mandatory breath. In the lung ventilator described in the aforementioned patent application the expiratory valve 8 can be controlled in a manner such that the patient exhales against a desired adjustable positive end expiratory pressure, PEEP. Other lung-ventilator designs can also be used in conjunction with the invention, however, provided that they fulfil the aforementioned conditions. When applying the present invention, the breathing-gas source 1 is suitably of such construction that it is able to deliver a quantity of gas corresponding at least to the maximum amount of gas per unit of time which the patient may be expected to require.

For the purpose of carrying out MMV-treatment method, the lung ventilator according to the invention is provided with the flow meter 9 in the inspiratory line 4 and a control unit 10, which receives the measuring signal obtained from the flow meter 9 and corresponding to the momentary value of the flow of breathing gas flowing through the inspiratory line 4, and which activates the ventilator unit 3 by means of an electric control signal to deliver a mandatory breath to the patient.

Figure 2 illustrates the principle construction of the control inut 10. The control unit 10 receives the flow signal V_f from the flow meter 9 and also a reference or set-point value signal V_r, which is assumed to have the same sign as the flow signal V_f and which for the sake of simplicity can initially be assumed to be constant but the value of which is adjustable. The reference signal V_r and the flow signal V_f are each supplied to an integrating circuit 13 and 16, respectively, which continuously integrate the input signals. The integrated reference signal $\int V_r$ is applied to one input of a subtracting circuit 11, to the other input of which there is applied the integrated flow signal $\int V_f$ via a limiter or threshold circuit 12, the function and purpose of which will be described in more detail hereinafter. The integrated signal $\int(V_f$ is subtracted in the circuit 11 from the integrated reference signal $\int V_r$, and hence, if the limiter 12 is considered not to have come into operation or has not been included in the system, the signal $\int(V_r - V_f)$ is produced on the output of the circuit 11. As will be understood, if the limiter 12 is omitted, the subtracting circuit 11 and the integrating circuits 13 and 16 may alternatively be replaced with a single subtracting integrating circuit, or the two signals V_r and V_f may, instead, be first subtracted from one another, whereafter the difference signal is continuously integrated. In all cases the resulting output signal $\int(V_r - V_f)$ will be the same. This signal is applied to a limiting circuit 14, which prevents the signal from falling beneath a predetermined lower limit value G 2, this limit value suitably being adjustable. The output signal from the limiting circuit 14, said signal being identical to the signal $\int(V_r - V_f)$ provided that the

limiting circuit 14 does not come into operation, is applied to one input of a comparison circuit 15, while an upper, preferably adjustable, limit value signal G1, which is higher than the previously mentioned limit value G2, is applied to the other input of the comparison circuit 15.

For the purpose of describing the function of the control unit 10 it will be assumed initially, for the sake of simplicity, that the limiting circuit 12 has been omitted and that the limiting circuit 14 has also been omitted or needs never come into operation. Further, it is assumed that the comparison circuit 15 is arranged to deliver an output signal to the ventilator unit 3 when its two input signals $\int(V_r-V_f)$ and G1 coincide. It is also assumed that the reference signal V_r is set to a value corresponding to a flow of breathing gas which equals that minute volume which the patient should at least receive. Finally, it is assumed that the value of the flow signal V_f is zero when no gas flows through the inspiratory line 4.

With the aforementioned assumptions, the lung ventilator will operate in the manner illustrated by the curve in Figure 3, when the patient does not breathe spontaneously at all. In this case, the flow signal V_f is zero at the commencement of the respiratory treatment, since the patient makes no attempt to breathe. Consequently, the integrated signal $\int(V_r-V_f)$ is equal to $\int V_r$ and initially rises linearly, as illustrated in Figure 3. When this integrated signal value reaches the limit value G1 at the time point t1 in Figure 3, the comparison circuit 15 sends a signal to the ventilator unit 3 which, under the influence of this signal, is activated to deliver to the patient a mandatory breath of pre-determined volume, the tidal volume. Thus, during this mandatory breath the integrated signal $\int(V_r-V_f)$ again falls to a level G3 as shown at the time point t2 in Figure 3. Thus, the level difference between G1 and G3 corresponds to the integral from t1 to t2 of (V_r-V_f) or, which is the same thing in the present case, the integral from 0 to t1 of the reference signal V_r. Thus, a mandatory breath is delivered to the patient between the time points t_1 and t_2. The patient thereafter breathes out through the expiratory line 7, and the integrated signal $\int(V_r-V_f)$ again rises linearly to again reach the limit value G1 at the time point t3 in Figure 3. The patient thus exhales between the time points t_2 and t_3. At time point t_3 the comparison circuit 15 again sends an output signal to the ventilator unit 3, which under the influence of this signal again delivers a mandatory breath to the patient in the manner aforedescribed. This is repeated periodically, provided that the patient makes no attempt to breathe spontaneously. Thus, treatment of the patient corresponds to a controlled mechanical ventilation with a minute volume corresponding to the preset value of the reference signal V_r and a pre-set tidal volume. The breathing frequency automatically becomes equal to the ratio of the minute volume V_r and the pre-set tidal volume.

If the patient is able to breathe spontaneously, however, the lung ventilator will operate in the manner illustrated, by way of example by the curve shown in Figure 4. In this case, the integrated signal $\int(V_r-V_f)$ will vary in pace with the patient's spontaneous breathing, as illustrated in Figure 4, i.e. the value of the signal will fall during the spontaneous inspirations of the patient in dependence upon the amount of gas spontaneously inspired by the patient, and will rise during the spontaneous expirations of the patient, when $V_f=0$. If the spontaneous breathing of the patient does not, on average, reach the minute volume corresponding to the preset value of the reference signal V_r, the integrated signal $\int(V_r-V_f)$, however, will gradually grow up to and reach the limit value G_1, as shown at the t1 in Figure 4. When this occurs the comparison circuit 15 sends, in the manner before described, a signal to the ventilator unit 3 which, under the influence of this signal, delivers to the patient a mandatory breath of said preset tidal volume, whereby the value of the integrated signal $\int(V_r-V_f)$ drops to the level G3, as shown in Figure 4. The patient can then continue to breathe spontaneously, to the extent to which he is able. If the patient should stilll inspire less gas than that which, on average, corresponds to the reference value V_r, the integrated signal will again gradually climb to the limit value G1, whereupon a further mandatory breath is delivered to the patient. Thus, it is ensured that the patient achieves a total ventilation, by spontaneous breathing and mandatory breaths, at least corresponding to the preset reference value V_r.

As beforementioned, the breathing-gas source 1 is suitably so constructed that it is able to supply to the patient, when the patient breathes spontaneously, an amount of gas which exceeds the minute volume corresponding to the preset value of V_r and which at least equals the maximum amount of gas which the patient can conceivably require.

During spontaneous breathing the patient can therefore breathe a larger amount of gas than that corresponding to the reference value V_r. Under these conditions, the integrated signal $\int(V_r-V_f)$ will fall to a level beneath the value G3, as illustrated to the right in Figure 4, and will continue to fall as long as the patient breathes spontaneously in the said manner. In this way it is possible for the integrated signal to fall to a very low value, and should the patient subsequently, for some reason or other, suddenly cease to breathe spontaneously, it might take a very long time before the integrated signal reaches the limit value G1 and a mandatory breath is delivered to the patient. This drawback can be eliminated in accordance with the invention, however, by passing the signal $\int(V_r-V_f)$ through the limiter circuit 14, which is designed to limit the integrated signal and prevent it from falling beneath a signal value G2, as shown in Figure 4. The limit value G2 must be selected to lie beneath the value G3. When the integrated signal reaches

the lower value G2, as a result of vigorous spontaneous breathing by the patient, which is illustrated in Figure 4 to occur at time point t2, the integrated signal is limited to the value G2, and is clamped at said value , until said vigorous spontaneous breathing by the patient ceases and the signal difference (V_r-V_f) again becomes positive, such that the integrated signal $\int(V_r-V_f)$ again begins to rise, which in the Figure 4 example takes place at the time point t3.

Thus, the invention enables a patient to breathe spontaneously more vigorously than that corresponding to the preset minute volume V_r, without any risk to the patient, even if the patient should suddenly cease to breathe spontaneously after such a period of vigorous spontaneous breathing.

The problem of panting of the patient, i.e. shallow and rapid breathing, mentioned in the introduction and encountered with previously known lung ventilator constructions for MMV-treatment, can be eliminated in accordance with the invention with the aid of the threshold or limiting circuit 12. The circuit 12 is so designed that of the incremented increases in the value of the integrated flow signal $\int V_f$ occurring with each inhalation by the patient, either spontaneous or mandatory, and corresponding to the gas volume of each inhalation the circuit 12 will only pass on those incremental increases having a value exceeding a given minimum value, i.e. a given minimum volume of breathing gas with each inhalation. In this way the control unit 10 will not take notice of those inhalations of small volume which occur when the patient pants and which do not have any actual effect on the ventilation of the patient. In this way the patient is ensured satisfactory ventilation, even if he or she should pant.

In the afordescribed embodiment of the invention the control unit 10 controls the frequency of mandatory breathes delivered to the patient by means of the ventilator unit 3, while the tidal volume for each said mandatory breath is determined and preset in the ventilator unit 3. It is conceivable, however, to use another embodiment of the invention, in which the ventilator unit 3 is preset and arranged to deliver to the patient mandatory breaths at a pre-determined frequency, while the control unit 10 causes the ventilator unit 3 to adapt the tidal volume of these mandatory breaths in dependence on the magnitude of the difference between the limit value G1 and the integrated signal $\int(V_r-V_f)$ at the time point when such a mandatory breath shall be delivered. Thus, the comparison circuit 15 detects this difference and sends a corresponding control signal to the ventilator unit 3. Thus, in this case the control unit 10 controls the tidal volume of the mandatory breaths, while the frequency of said breaths is preset.

In the aforegoing it has been assumed that the reference signal V_r is preset to a value which corresponds with that minute volume of breathing gas which the patient should at least receive. It is also possible, however, to adjust or vary this reference signal V_r in dependence on other physiological parameters, such as the desired alveolar ventilation of the patient.

In the aforedescribed embodiment of the invention the flow of gas through the inspiratory line 4 is measured by means of the flow meter 9. Since, however, when seen in total, the flow of gas through the expiratory line 7 is equal to the flow of gas through the inspiratory line 4, it is also possible in accordance with the invention to incorporate the flow meter 9 in the expiratory line 7 in order to measure the flow of gas therethrough.

Claims

1. A method of controlling a lung ventilator which includes a source of breathing gas, an inspiratory line having means for connecting the same to the airways of a patient and through which said patient can breathe spontaneously from said breathing-gas source; a ventilator unit which can be activated to deliver to the patient through said inspiratory line a mandatory breath of determinable tidal volume from said breathing-gas source; and an expiratory line which can be connected to the airways of the patient and through which the patient can exhale, wherein the flow of breathing gas through the inspiratory line or the expiratory line is continuously sensed and a signal representative of the momentary value of said flow is generated; a signal is generated which is proportional to the continuous integral of the difference between a reference signal and said flow signal with consideration being taken to the sign of the signal difference the value of the integrated difference signal is compared with a first given limit value and the ventilator unit is activated to deliver a mandatory breath to the patient in dependence on the result of said comparison.

2. A method according to claim 1, wherein the ventilator unit is activated to deliver to the patient a mandatory breath of given tidal volume each time the value of the integrated difference signal reaches said first limit value.

3. A method according to claim 1, wherein the ventilator unit is activated to deliver to the patient mandatory breaths of a constant given frequency and of a tidal volume dependent on the deviation of the integrated difference signal from said first limit value at the time point of each mandatory breath.

4. A method according to any one of claims 1 to 3, wherein the value of the integrated difference signal is limited downwardly so as to prevent said value from falling beneath a second limit value which is lower than the first limit value.

5. A method according to any one of claims 1 to 4, wherein the value of the reference signal is selected to correspond to a flow of breathing gas which equals that minute volume of breathing gas which is the least volume of gas that the patient should receive.

6. A method according to any one of claims 1 to 4, wherein the value of the reference signal is adjusted to correspond to a flow of breathing gas which produces desired alveolar ventilation of the patient.

7. A method according to any one of claims 1 to 6, wherein the reference signal and the flow signal are each integrated continuously, and the integrated flow signal is then subtracted from the integrated reference signal; and the integrated flow signal is subjected, prior to said subtraction, to a limitation which eliminates any incremental increases in the integrated flow signal which are lower than a given minimum value.

8. An arrangement for controlling a lung ventilator comprising a breathing-gas source, an inspiratory line which can be connected to the airways of a patient and through which the patient can breathe spontaneously from said breathing-gas source, a ventilator unit capable of being activated in response to a control signal to deliver to the patient through said inspiratory line a mandatory breath of determinable tidal volume from said breathing-gas source, and an expiratory line which can be connected to the airways of the patient and through which the patient can exhale, wherein said arrangement comprises a flow meter for continuously sensing the flow of breathing gas through the inspiratory line or the expiratory line and generating a signal representative of the momentary value of said flow; means arranged to generate a signal representative of the continuous integral of the difference between a reference signal and said flow signal and means arranged to compare the value of the integrated difference signal with a first limit value and to generate said control signal for the ventilator unit in dependence on said comparison.

9. An arrangement according to claim 8, wherein said comparison means is arranged to send to the ventilator unit said control signal for activating said ventilator unit to deliver to the patient a mandatory breath of a pre-determined tidal volume each time the comparison means establishes that the value of the integrated difference signal coincides with said first limit value.

10. An arrangement according to claim 8, wherein the ventilator unit is arranged to deliver to a patient mandatory breaths of a given frequency and that said comparison means is arranged at the time point of each such mandatory breath to send to the ventilator unit a control signal for determining the tidal volume of the mandatory breath in dependence on the difference prevailing at the time point in question between the value of the integrated difference signal and said first limit value.

11. An arrangement according to any one of claims 8 to 10, wherein the means for generating the integrated difference signal includes separate integrating circuits for the continuous integration of the reference signal and the flow signal respectively and a subtraction circuit to which the output signals of the two integrating circuits are applied; and in that a limiting circuit is connected between the subtraction circuit and the flow-signal integrating circuit for eliminating any incremental increase in the integrated flow signal which fall below a given minimum value.

12. An arrangement according to any one of claims 8 to 11, wherein a limiting circuit for limiting the value of the integrated difference signal, such that said value cannot fall beneath a second limit value is connected between the means which generate the integrated difference signal and said comparison means.

13. A method of controlling a lung ventilator substantially as herein described with reference to the accompanying drawings.

14. An arrangement for controlling a lung ventilator substantially as herein described with reference to and as shown in the accompanying drawings.

15. A lung ventilator provided with a control arrangement according to any one of claims 8 to 11 or 14.

16. Any novel feature or combination of features disclosed herein.

Printed for Her Majesty's Stationery Office by the Courier Press, Leamington Spa, 1982. Published by the Patent Office, 25 Southampton Buildings, London, WC2A 1AY, from which copies may be obtained.