(12) UK Patent Application (19) GB (11) 2 128 768 A

(21) Application No **8323243**
(22) Date of filing
30 Aug 1983
(30) Priority data
(31) **57/177654**
(32) **12 Oct 1982**
(33) **Japan (JP)**
(43) Application published
2 May 1984
(51) **INT CL³ G02B 7/26**
(52) Domestic classification
G2J G19 G8 G9 GED
H1K 1EA1 5A1 QAG
(56) Documents cited
GB A 2086073
GB A 2064862
GB A 2026194
GB 1558063
GB 1544241
EP A2 0053020
EP A1 0014961
EP A1 0014610
EP A1 0010507
EP A1 0010352
EP A1 0009330
EP A1 0008979
(58) Field of search
G2J
(71) Applicant
Hitachi Ltd
(Japan)
6 Kanda Surugadai
4-chome
Chiyoda-ku
Tokyo
Japan
(72) Inventor
Satoru Ishii
(74) Agent and/or Address for Service
Mewburn Ellis & Co
2–3 Cursitor Street
London EC4A 1BQ

(54) Connecting optical fibre to a light emitting device

(57) A light emitting device e.g. a laser diode chip (5) is connected to an optical fibre (8) in a sealed case. The laser diode chip (5) may be mounted on a pedestal portion (3) or a stem (1) by means of a sub-mount (4). A support (19) has a through hole (20) for supporting the optical fibre chip (8), in a state in which its whole periphery is surrounded with a fixing material (11) e.g. a resin or solder.

FIG. 7

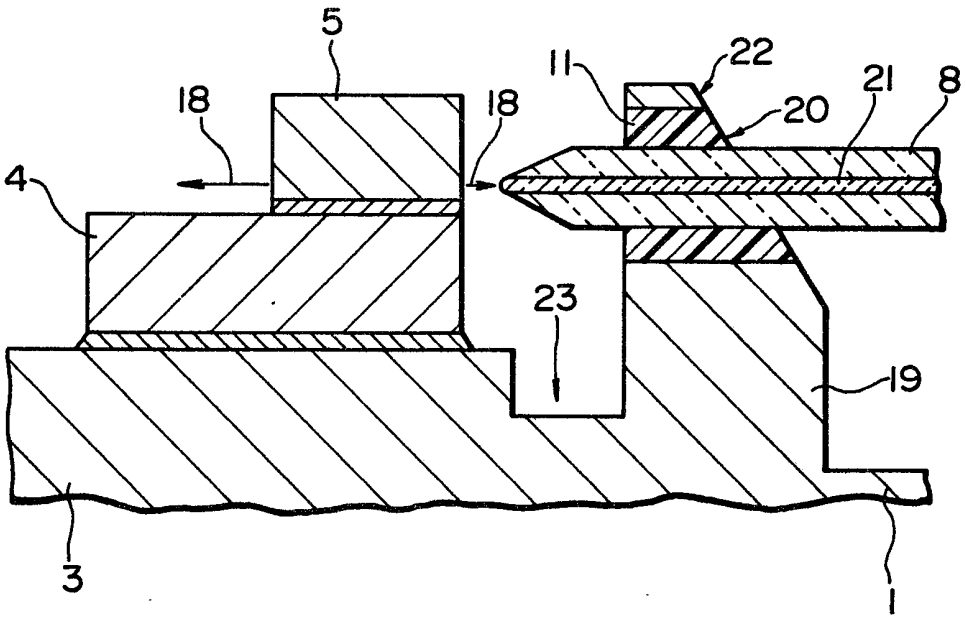

GB 2 128 768 A

FIG. 1

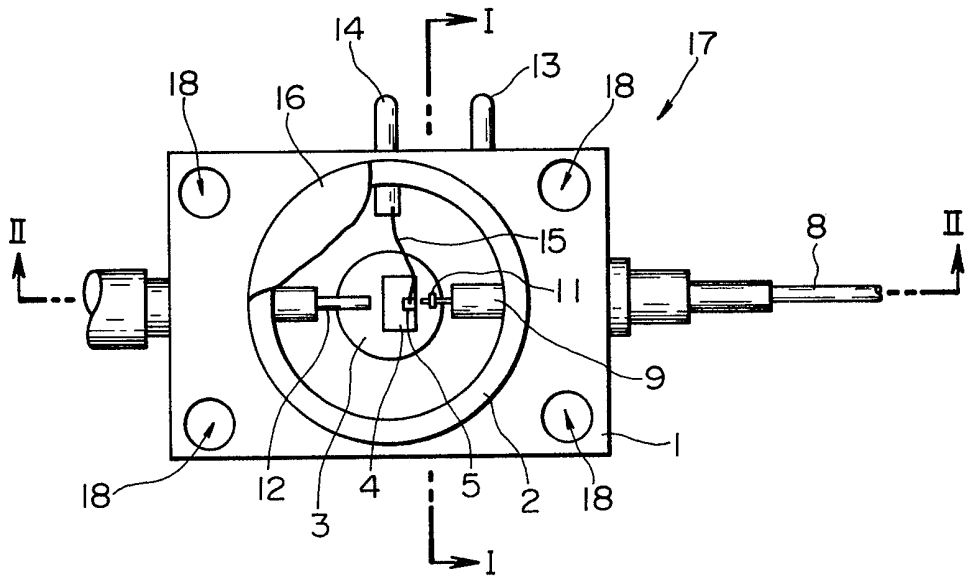
14
I
17
13
18
16
18
II
15
8
II
11
9
1
18
12
4
5
2
18
3
I

FIG. 2

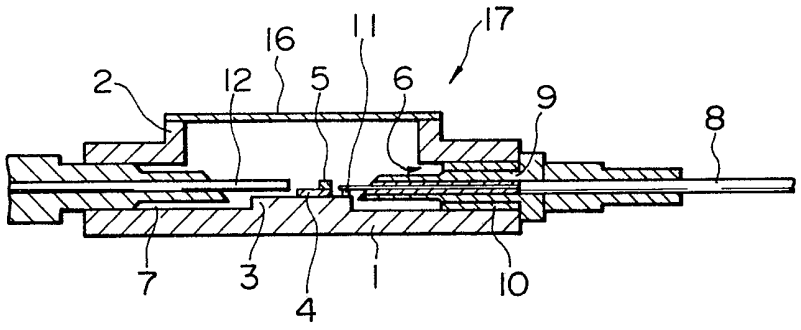
17
16
11
2
12
5
6
9
8
7
3
4
1
10

FIG. 3

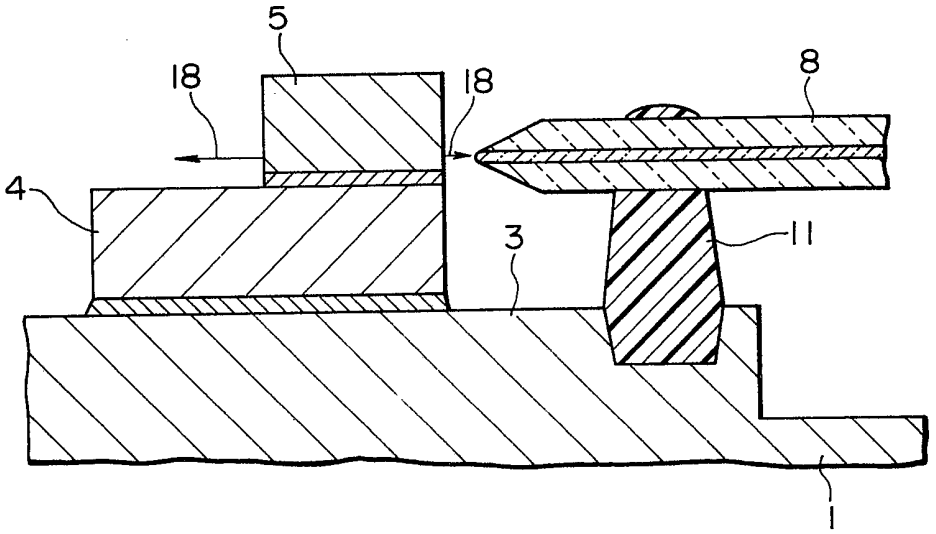

FIG. 4

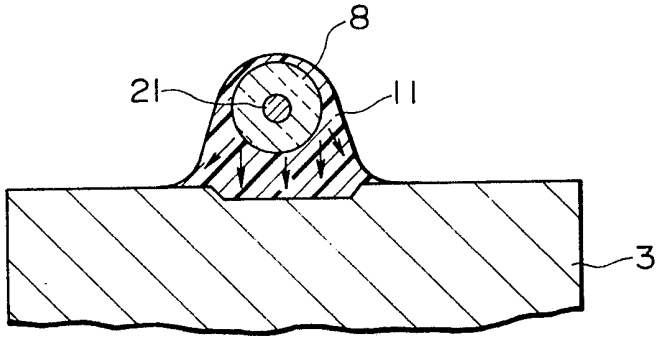

FIG. 5

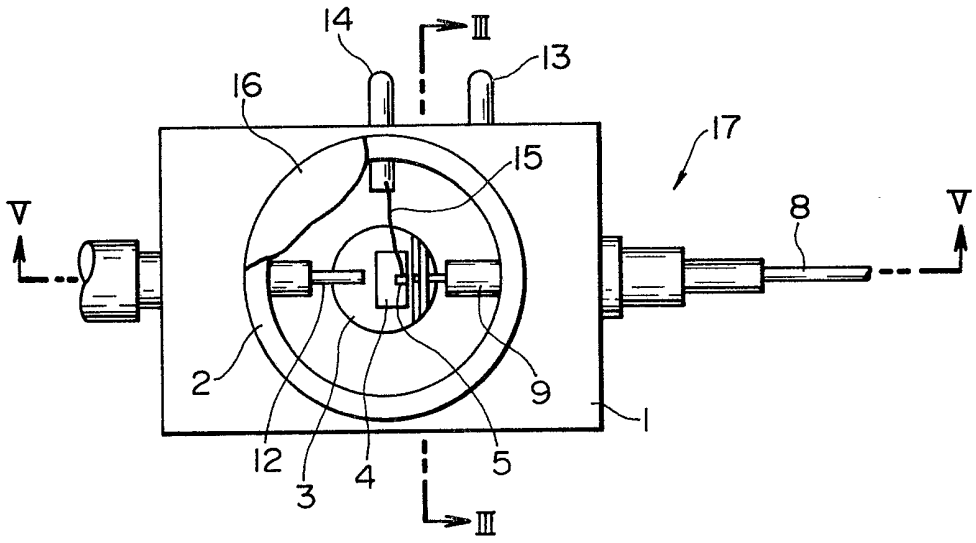

FIG. 6

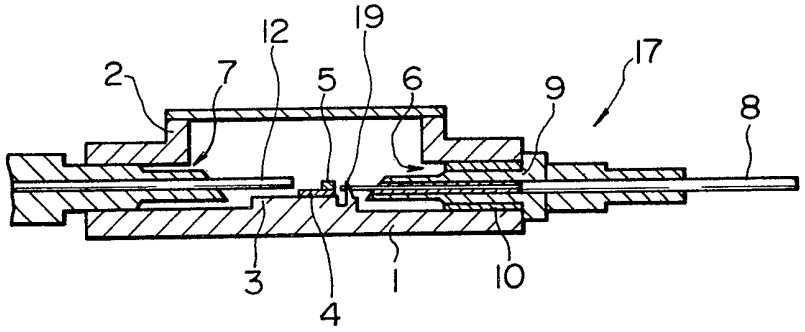

FIG. 7

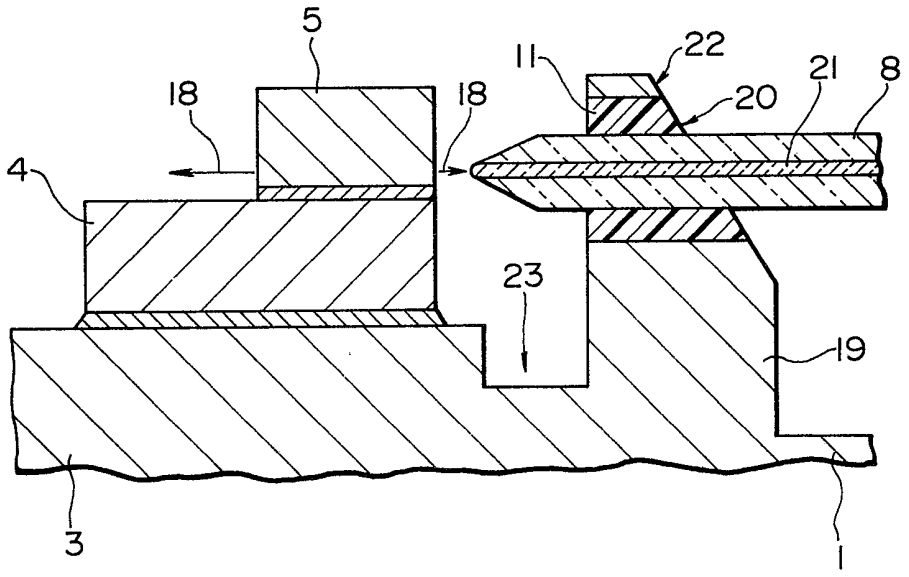

FIG. 8

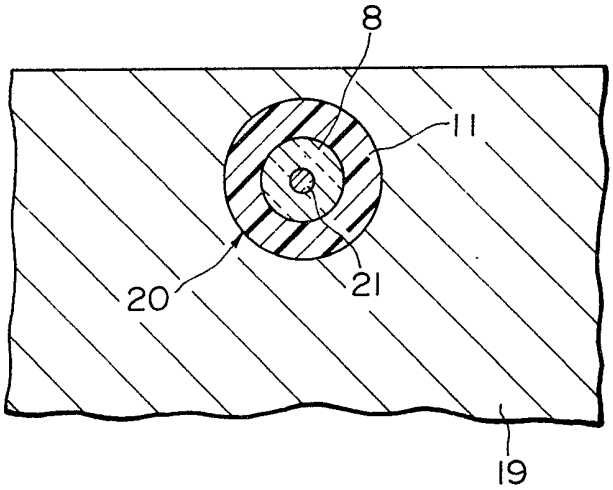

FIG. 9

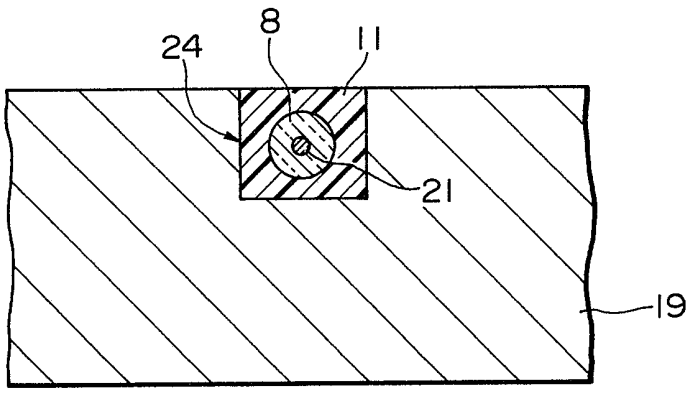

FIG. 10

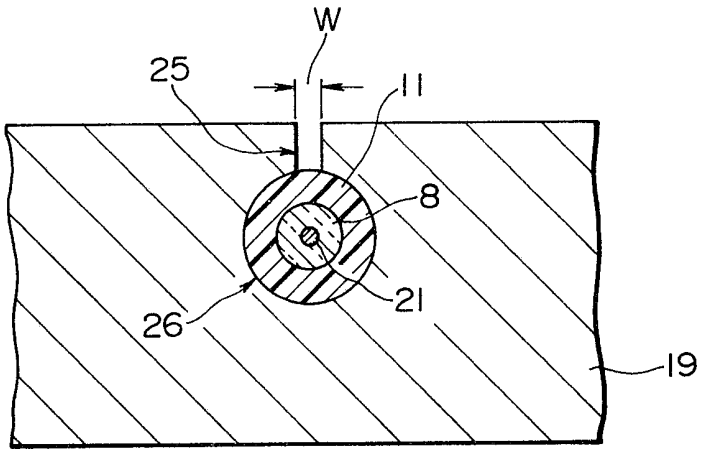

FIG. 11

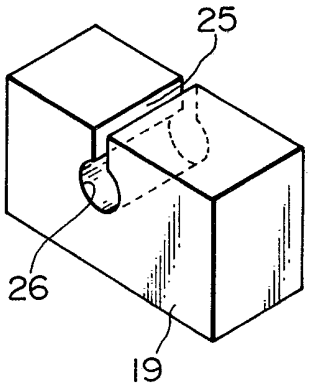

FIG. 12

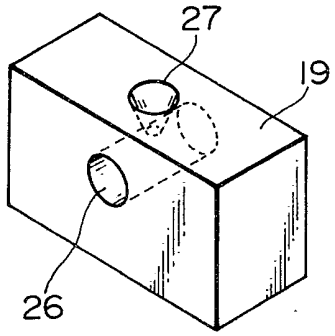

SPECIFICATION

A light emitting device

The present invention relates to a light emitting device, and more particularly to a laser diode device with optical fibre which is used for light propagation.

As one of light propagation devices such as optical communication devices, there has been known a semiconductor laser element combined with optical fibre. For example, a laser module unit which employs a single-mode optical fibre and a semiconductor laser chip is disclosed in Japanese Laid-open Patent Application No. 2589/82. This laser module unit uses a condensing lens for the photocoupling between the laser chip and the optical fibre, and is complicated in arrangement.

As an optical communication device, we have previously developed a laser diode device with optical fibre having a structure as shown in Figs. 1 to 3 of the accompanying drawings. This laser diode device does not include a condensing lens between a laser chip and optical fibre, and has a simple arrangement as well as being small in size. It is assembled on a stem 1 in the form of an oblong plate. The stem 1 is such that one surface of the oblong metal plate is cut to form a ring-shaped sealing wall 2 in the central part thereof, and that the inner side of the ring-shaped sealing wall 2 is hollowed out still deeper, whereupon a pedestal portion 3 is formed centrally of the bottom of the hollow. A submount 4 is fixed on the pedestal portion 3 by means of solder, and a laser diode chip 5 is fixed on the submount 4 by means of solder. At both the ends of the stem 1, there are respectively provided guide holes 6 and 7 extending toward those exit faces of the chip 5 from which laser radiation emerges. A fibre guide 9, in which optical fibre 8 is centrally and snugly inserted and fixed, is fitted in one guide hole 6 and is fixed to the stem 1 by means of a silver paste 10. The front end of the optical fibre 8 faces one exit face of the laser diode chip 5 so as to receive the laser radiation emitted therefrom.

Referring to Fig. 3, which shows in exaggerated form the fixed tip portion of the optical fibre, the tip portion of the optical fibre 8 is fixed to the pedestal portion 3 of the stem 1 with a fixing material 11 such as resin or solder, in order to prevent the efficiency of receiving the light into the optical fibre 8 (photocoupling efficiency) from fluctuating due to vibrations. Regarding a single-mode fibre which has a core diameter of approximately 8 μm, the precision of the alignment of the optical axis of the optical fibre 8 at the front end thereof relative to the chip 5 must be rendered within, e.g. ± 0.2 to 0.3 μm in order to attain the desired photocoupling efficiency necessary for satisfactory operation.

A monitor fibre 12 is snugly inserted and fixed in the other guide hole 7. The front end of this monitor fibre 12 faces the other exit face of the laser diode chip 5 so as to monitor the light intensity of the laser radiation. Two terminals 13 and 14 are provided in the stem 1. One terminal 13 is an earth terminal which is welded to the stem 1 and which is electrically connected to the lower electrode of the laser diode chip 5 through the stem 1 as well as the submount 4. The other lead 14 is fixed to the stem 1 through a glass (insulator) not shown, and its inner end protrudes from one end face of the stem 1 into the space inside the ring-shaped sealing wall 2. The protruding inner end and the upper electrode of the laser diode chip 5 are electrically connected by a conductor 15 made of gold. A flat cap 16 is mounted in airtight manner on the top of the ring-shaped sealing wall 2 by seam welding so as to hermetically encapsulate the laser diode chip 5.

The alignment of the optical axes of the fibre and the laser diode chip is effected in such a way that a position is reached where the greatest proportion of the laser radiation emitted from the fixed laser diode chip 5 is received into the optical fibre 8, this position being accurately determined by means of a photodetector whilst the optical fibre is being moved. The optical fibre 8 is fixed at the point where the detected received radiation is a maximum. However, we have found by experiment that however accurately the optical axes of the optical fibre and the chip are aligned, the optical axis of the optical fibre shifts after it has been fixed, so the photocoupling efficiency is reduced.

We have found that the cause of this is due to the front end (photocoupled end) of the optical fibre 8 being drawn downwards due to the curing shrinkage of the fixing material 11, so that it is shifted from its original position.

This situation is illustrated in Fig. 4 of the accompanying drawings. The figure illustrates a partial section taken along line I–I in Fig. 1. The fixing material such as resin 11 spreads out downwardly from the optical fibre 8, and pulls it down as it cures. In Fig. 4, the direction of the pulling-down forces are indicated by arrows. Since magnitude of the pulling-down forces is as great as 0.3–0.4 μm at the maximum, the photocoupling efficiency is reduced, with the result that the available percentage transmission of radiation from the laser diode device is substantially reduced. In the case of single-mode fibre whose core 21 has a diameter of several μm, it has been found that there is hardly any transmission of radiation.

It is an object of the present invention to provide a laser diode device with optical fibre which can maintain a high photocoupling efficiency.

According to the present invention there is

provided a light emitting device in which a light emitting element and a photocoupled end of an optical fibre for receiving light emitted from the light emitting element are held within a sealed case; wherein the optical fibre is held in a through hole provided in a support, in a state in which the whole periphery of the optical fibre is surrounded with a fixing material.

The present invention will now be described in greater detail by way of example with reference to the remaining figures of the accompanying drawings, wherein:–

Figure 5 is a plan view, partly broken away, of a preferred form of a laser diode device with optical fibre;

Figure 6 is a sectional view taken along line V–V in Fig. 5;

Figure 7 is an enlarged sectional view showing a part of the laser diode shown in Fig. 5;

Figure 8 is an enlarged sectional view taken along line III–III in Fig. 5, showing the optical fibre supporting portion;

Figure 9 is an enlarged sectional view showing the optical fibre supporting portion in a second form of a laser diode device provided with an optical fibre;

Figure 10 is an enlarged sectional view showing the optical fibre supporting portion in a third form of a laser diode device provided with an optical fibre;

Figure 11 is a perspective view of the optical fibre supporting portion shown in Fig. 10; and

Figure 12 is a perspective view showing a modified embodiment of the optical fibre supporting portion.

Referring to Figs. 5 to 8, the laser diode device is assembled on the oblong metal stem 1 in similar manner to the prior-art laser diode device shown in Figs. 1 to 3. The stem 1 is such that one surface of the oblong metal plate is cut to form a ring-shaped sealing wall 2 in the central part thereof, and that the inner side of the ring-shaped sealing wall 2 is hollowed out still deeper, in order to form a pedestal portion 3 centrally of the bottom of the hollow. A submount 4 is fixed on the pedestal portion 3 by means of solder, and a laser diode chip 5 is fixed on the submount 4 by means of solder. At both the ends of the stem 1, there are respectively provided guide holes 6 and 7 extending toward the exit faces of the laser diode chip 5 from which laser radiation is emitted. A fibre guide 9, in which the optical fibre 8 is centrally and snugly inserted and fixed, is fitted in one guide hole 6 and is fixed to the stem 1 with a silver paste 10. The front end of the optical fibre 8 faces one exit face of the laser diode chip 5 so as to receive the laser radiation from the chip 5.

As shown in Fig. 7, the front end (photocoupled end) of the optical fibre 8 penetrates through a hole 20 provided in a support 19 which projects from the pedestal portion 3 of the stem 1 and is fixed to the support 19 with a fixing material 11 such as resin or solder, in order to prevent the efficiency of receiving the light into the optical fibre 8 (photocoupling efficiency) from fluctuating due to vibrations. The core 21 of the optical fibre 8 has a diameter of 5–10 μm. The upper part of the support 19 has an inclined surface 22, so that the fixing material 11 which consists of a resin or a brazing material can be easily supplied into the hole 20 which has a diameter of about 0.5 μm. That part of the pedestal portion which is inside the support 19 is provided with an outflow recess 23 which is 0.5 mm wide and which receives and drains away the excess fixing material 11 which has overflowed through the circular hole 20. Therefore, the end faces of the submount 4 and the laser diode chip 5 are prevented from being covered with the excess fixing material 11 which has overflowed through the hole 20, and the reception of the laser radiation 18 is not impeded.

A monitor fibre 12 is snugly inserted and fixed in the other guide hole 7. The front end of this monitor fibre 12 faces the other exit face of the laser diode chip 5 so as to monitor the light intensity of the laser radiation. Two terminals 13 and 14 are provided in the stem 1. The terminal 13 is an earth terminal, which is welded to the stem 1 and which is electrically connected to the lower electrode of the laser diode chip 5 through the stem 1 as well as the submount 4. The other terminal 14 is fixed to the stem 1 through a glass insulator (not shown) and its inner end protrudes from one end face of the stem 1 into the space inside the ring-shaped sealing wall 2. The inner end and the upper electrode of the laser diode chip 5 are electrically connected by a conductor 15 made of gold. A flat cap 16 is mounted in air-tight manner on the top of the ring-shaped sealing wall 2 by seam welding so as to hermetically encapsulate the laser diode chip 5.

In assembling the above described laser diode device, after the optical axes of the laser diode chip 5 and the optical fibre 8 have been aligned, the fixing material 11 is supplied into the hole 20 which the optical fibre 8 penetrates, and it is cured. As shown in Fig. 8, the optical fibre 8 passes along the axis of the hole 20 and has its whole outer periphery supported uniformly by the fixing material 11. In consequence, even when the curing shrinkage of the fixing material 11 has begun, the optical fibre 8 has its whole outer periphery drawn uniformly in the radial directions and is fixed without changing its position at the alignment of the optical axes, so that the photocoupling efficiency of the optical fibre 8 with the laser diode chip 5 is not substantially reduced. Accordingly, a laser diode device of

good photocoupling efficiency can be manufactured at high available percentage transmission of the radiation from the laser diode device.

Referring now to the second embodiment shown in Fig. 9, the support 19 for supporting the optical fibre 8 is provided with a groove 24, the optical fibre 8 passing along the axis of this groove 24 and having its whole outer periphery supported by the fixing material 11 packed therein. Thus in similar manner to the first embodiment, the optical fibre 8 is fixed while maintaining the state at the optical axis alignment.

Referring now to the third embodiment shown in Fig. 10, a notch or fine slot 25 and a hole 26 continuous therewith is provided in the support 19 for supporting the optical fibre 8. The optical fibre 8 passes along the axis of the hole 26 so as to have its whole outer periphery supported by the fixing material 11 packed in this hole.

The width W of the slot 25 is smaller than the diameter of the hole 26. Accordingly, as in the case of the first embodiment, the optical fibre 8 has its whole outer periphery drawn uniformly in the radial directions and can be fixed without changing the position at the optical axis alignment.

This third embodiment has the advantage that the fixing material 11 for fixing the optical fibre 8 can be efficiently injected into the hole 26 through the slot 25.

The external appearance of the support 19 shown in Fig. 10 is such that the notch 25 which is contiguous with the hole 26 is formed as shown in Fig. 11.

In a modified form, as shown in Fig. 12, the support 19 may well be a structure which has a port 27 for injecting the fixing material into the hole 26.

When the width W of the slot 25 is greater than the diameter of the optical fibre 8, the optical fibre can be fed into the hole 26 through the slot 25 in the assembling operation of the laser diode device. In a further modified form, the slot 25 may be provided in the lateral part of the support 19, and not in the upper part as shown in Fig. 11.

The present invention is applicable to light propagation devices employing fibre for audio and communication uses, and is most effective when applied to laser diode devices having a single-mode optical fibre of small core diameter.

CLAIMS

1. A light emitting device in which a light emitting element and a photocoupled end of an optical fibre for receiving light emitted from the light emitting element are held within a sealed case; wherein the optical fibre is held in a through hole provided in a support, in a state in which the whole periphery of the optical fibre is surrounded with a fixing material.

2. A light emitting device according to claim 1, wherein said light emitting element is a laser diode chip, the photocoupled end of the optical fibre receiving laser radiation emitted from an exit face.

3. A light emitting device according to claim 1 or 2, wherein said fixing material comprises a resin or a brazing material.

4. A light emitting device according to any one of the preceding claims, wherein a slot which is contiguously formed in said support with said through hole, said slot serving to inject said fixing material along said through hole.

5. A light emitting diode according to claim 4, wherein said slot is formed on the upper surface of said support.

6. A light emitting device according to claim 4 or 5, wherein the width of said slot is smaller than the diameter of said through hole.

7. A light emitting device according to any one of the preceding claims 1 to 3, wherein a port which is contiguously formed in said support with said through hole and which serves to inject said fixing material into said through hole.

8. A light emitting device according to claim 7, wherein said port is formed on the upper surface of said support.

9. A light emitting device according to claim 4, wherein the upper part of the support is provided with an inclined surface to assist in the application of the fixing material.

10. A light emitting device constructed substantially as herein described with reference to and as illustrated in Figs. 5 to 8, or Fig. 9 or Figs. 10 and 11, or Fig. 12 of the accompanying drawings.

Printed for Her Majesty's Stationery Office
by Burgess & Son (Abingdon) Ltd.—1984.
Published at The Patent Office, 25 Southampton Buildings,
London, WC2A 1AY, from which copies may be obtained.