June 11, 1929. H. W. A. DIXON 1,717,012

ROTARY DISK VALVE

Filed March 23, 1927 2 Sheets-Sheet 1

FIG. I.

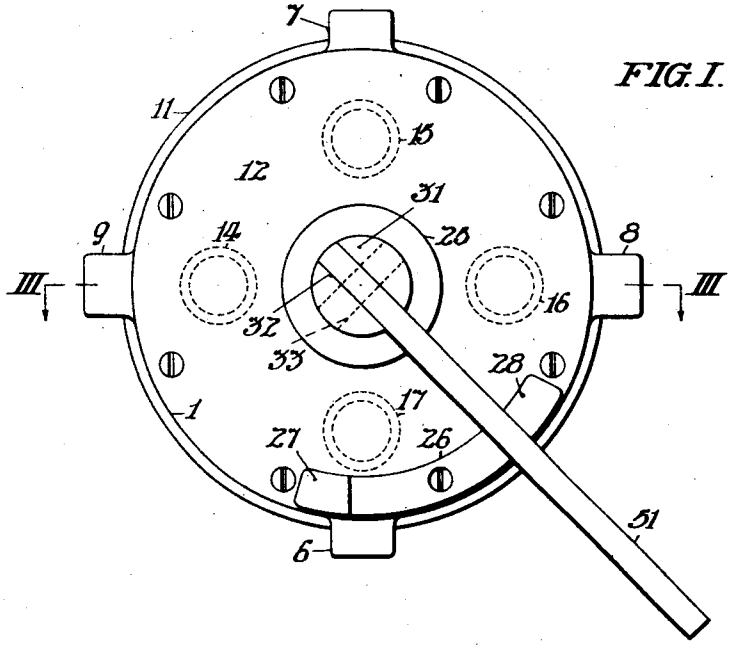

FIG. II.

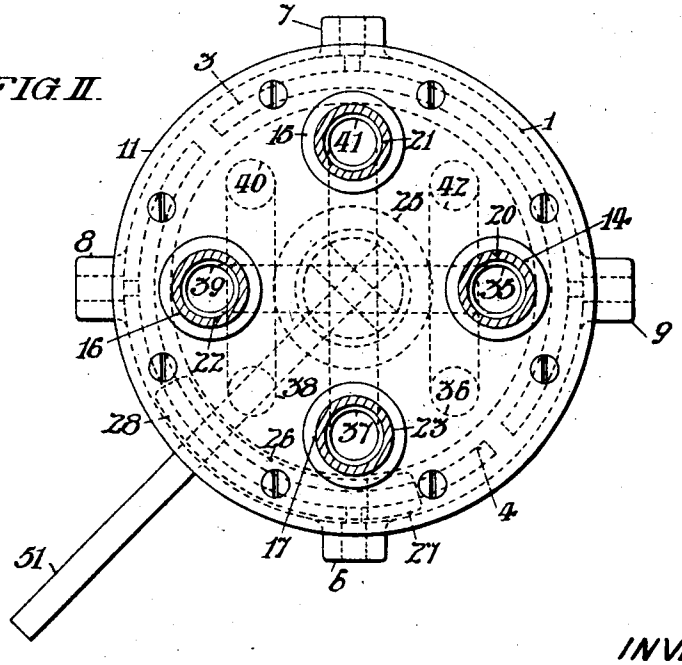

INVENTOR:
HAROLD W. A. DIXON,
by Arthur E. Briggs
Attorney.

June 11, 1929. H. W. A. DIXON 1,717,012

ROTARY DISK VALVE

Filed March 23, 1927 2 Sheets-Sheet 2

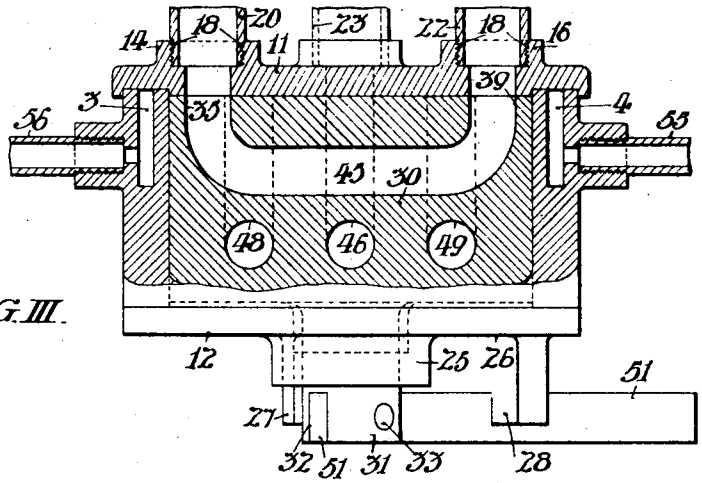

FIG. III.

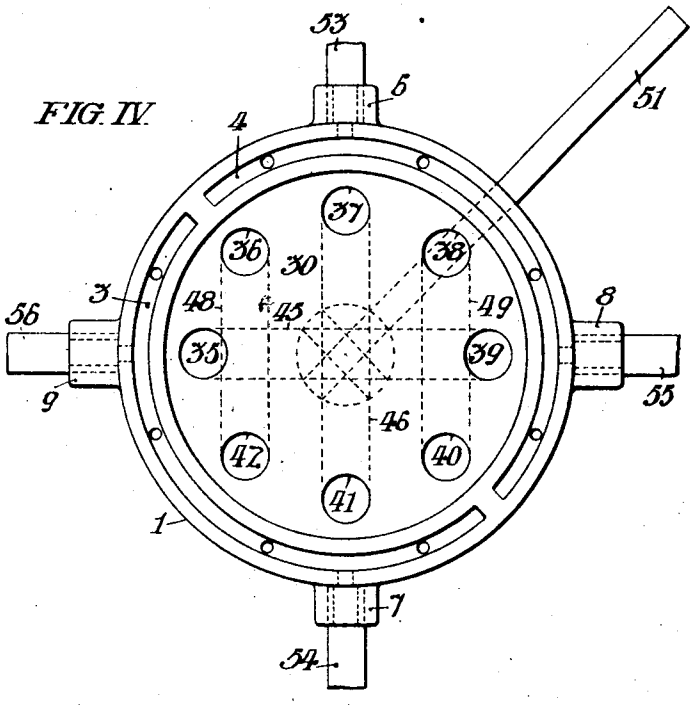

FIG. IV.

INVENTOR:
HAROLD W. A. DIXON,
By Arthur E. Craig
Attorney.

Patented June 11, 1929. 1,717,012

UNITED STATES PATENT OFFICE.

HAROLD W. A. DIXON, OF NEW YORK, N. Y.

ROTARY DISK VALVE.

Application filed March 23, 1927. Serial No. 177,725.

My invention was designed for embodiment in the colloid treating apparatus which is the subject matter of my copending application Serial No. 177,726 filed March 23, 1927, for Letters Patent of the United States. However, I do not desire to limit myself to such use. In that embodiment, said valve is adapted to alternately connect two kettle tanks with a rotary mill for comminuting color pastes progressed through said mill from one tank to the other in alternation. In that embodiment; said valve is connected with four conduits, two of which lead respectively to said tanks and two of which lead respectively to the inlet and the outlet of said mill. However, the valve structure herein claimed is susceptible of other uses.

My invention includes the various novel features of construction and arrangement hereinafter more definitely specified.

In said drawings; Fig. I is a plan view of a valve structure conveniently embodying my invention.

Fig. II is an inverted plan view of said valve structure.

Fig. III is a fragmentary diametrical sectional view of said valve structure, taken on the line III, III in Fig. I.

Fig. IV is an inverted view of said valve structure, with the bottom plate thereof removed to show the arrangement of the semi-annular recesses in the valve casing wall.

Referring to Figs. I to IV inclusive; the casing 1 includes a hollow cylinder having two semi-annular recesses 3 and 4 in coaxial relation in its wall, respectively provided with inlet ports 6 and 7 and outlet ports 8 and 9 for fluid temperature controlling means, for instance, steam, whereby the entire valve structure may be heated.

Said valve casing 1 is provided with axially opposite end closures 11 and 12; the former having four ports, respectively 14, 15, 16, and 17, arranged equidistantly in a circumferential series and respectively provided with screw threads 18 for connection with respective conduits 20, 21, 22, and 23.

The other of said end closures, 12, has the valve bearing 25 in coaxial relation therewith, and the sectoral handle stop flange 26 projecting therefrom in the perimeter thereof in coaxial relation with said valve bearing and having stop lugs 27 and 28 at respectively opposite ends thereof.

The cylindriform valve body 30 is mounted to rotate in said casing 1 and has the axial stem 31 extending through said bearing 25 and provided with handle engaging means including the diametrical slot 32 and pin 33. The opposite end of said valve body 30 is plane and arranged to turn in contact with the inner face of said closure 11.

Said valve body 30 has eight ports 35, 36, 37, 38, 39, 40, 41, and 42 arranged equidistantly in a circumferential series and adapted to selectively register with said ports 14, 15, 16, and 17 in said closure 11.

The pair of ports 35 and 39, which are in diametrical relation in said valve body 30, are connected by the duct 45 extending in said body. The pair of ports 37 and 41 which are also in diametrical relation in said body, but transverse to said first pair, are connected by the duct 46 extending in said body; so that said four ports are thus connected in pairs in crossed relation.

The other four ports in said valve body, to wit, the ports 36, 38, 40 and 42, which are arranged in alternation with said cross connected ports 35, 37, 39, and 41, are connected in pairs by ducts 48 and 49 extending in said body in parallel relation with said duct 46; said duct 48 thus connecting said ports 36 and 42, and said duct 49 thus connecting said ports 38 and 40.

The handle 51 is rigidly connected with said valve stem 31 by the pin 33 and extends in cooperative relation with said handle stop flange 26, between said stop lugs 27 and 28; so that said valve body 30 may be turned through an arc which is limited to forty-five degrees, to alternately connect in crossed relation and in parallel relation the four ports 14, 15, 16, and 17 in said closure 11. In the position shown in Figs. I to IV inclusive; said port 14 is thus connected with said port 16, and said port 15 connected with said port 17 in crossed relation. However, when said handle 51 is moved to the opposite extreme of its range, said port 14 is connected with said port 15, and said port 16 is connected with said port 17 in parallel relation.

The means arranged to circulate a temperature controlling fluid through each of said semi-annular recesses 3 and 4, include the conduits 53 and 54 respectively connected with said casing inlet ports 6 and 7, and conduits 55 and 56 respectively connected with said

outlet ports 8 and 9. As above contemplated, said conduits 20 and 23 may lead to respective tanks and said conduits 22 and 21 may lead respectively to the inlet and the outlet of a rotary mill, and said valve be used to progress a liquid through said mill, from one tank to the other, in alternation.

However, I do not desire to limit myself to the precise details of construction, arrangement or procedure herein set forth, as it is obvious that various modifications may be made therein, without departing from the essential features of my invention, as defined in the appended claims.

I claim:

1. In a multiway valve, the combination with a casing including a hollow cylinder having two semi-annular recesses in coaxial relation in its wall, each provided with an inlet port and an outlet port for fluid temperature controlling means; of axially opposite end closures for said casing; one having four ports arranged equidistantly in a circumferential series and respectively provided with screw means for connection with respective conduits; the other of said end closures having a valve bearing in coaxial relation therewith and a sectoral handle stop flange projecting therefrom at the perimeter thereof in coaxial relation with said valve bearing; a cylindriform valve body mounted to rotate in said casing and having an axial stem extending through said bearing and provided with handle engaging means; the opposite end of said valve body being plane and arranged to turn in contact with the inner face of said closure having the four ports; said valve body having eight ports arranged equidistantly in a circumferential series in its plane end and adapted to register with the ports in said closure; one pair of said ports in said valve body, in diametrical relation, being connected by a duct extending in said body; another pair of ports in said valve body, in diametrical relation, but transverse to said first pair, being connected by a duct extending in said body; so that said four ports are thus connected in pairs in crossed relation; the other four ports in said valve body, which are arranged in alternation with said cross connected ports, being connected in pairs by ducts extending in said body in parallel relation with one of said diametrical ducts; and a handle on said valve extending in cooperative relation with said handle stop flange, whereby said valve body may be turned through an arc limited to forty-five degrees, to alternately connect in crossed relation and in parallel relation, the four ports in said closure; means arranged to circulate a temperature controlling fluid through each of said semi-annular recesses, independently of the other, including conduits respectively connected with the inlet and the outlet ports in said casing; and means arranged to circulate a fluid through said valve, including conduits respectively connected with the ports in said end closure.

2. In a multiway valve, the combination with a casing including a hollow cylinder having an arcuate recess in coaxial relation in its wall, provided with an inlet port and an outlet port for fluid temperature controlling means; of axially opposite end closures for said casing; one having four ports arranged equidistantly in a circumferential series and respectively provided with means for connection with respective conduits; the other of said end closures having a valve bearing in coaxial relation therewith and handle stop means; a cylindriform valve body mounted to rotate in said casing and having an axial stem extending through said bearing and provided with a handle; the opposite end of said valve body being plane and arranged to turn in contact with the inner face of said closure having the four ports; said valve body having eight ports arranged in a circumferential series in its plane end and adapted to register with the ports in said closure; one pair of said ports in said valve body, in diametrical relation, being connected by a duct extending in said body; another pair of ports in said valve body, in diametrical relation, but transverse to said first pair, being connected by a duct extending in said body; so that said four valve ports are thus connected in pairs in crossed relation; the other four ports in said valve body, which are arranged in alternation with said cross connected ports, being connected in pairs by ducts extending in said body in parallel relation with one of said diametrical ducts; and a handle on said valve extending in cooperative relation with said handle stop means; whereby said valve body may be turned through an arc limited to forty-five degrees, to alternately connect in crossed relation and in parallel relation, the four ports in said closure; means arranged to circulate a temperature controlling fluid through said arcuate recess, including conduits respectively connected with the inlet and the outlet ports in said casing; and means arranged to circulate a fluid through said valve, including conduits respectively connected with the ports in said end closures.

3. In a multiway valve, the combination with a casing including a hollow cylinder; of axially opposite end closures for said casing; one having four ports arranged equidistantly in a circumferential series and respectively provided with means for connection with respective conduits; the other of said end closures having a valve bearing in coaxial relation therewith and handle stop means; a cylindriform valve body mounted to rotate in said casing and having an axial stem extending through said bearing and provided with a handle; the opposite end of said valve body

being plane and arranged to turn in contact with the inner face of said closure having the four ports; said valve body having eight ports arranged in a circumferential series in its plane end and adapted to register with the ports in said closure; one pair of said ports in said valve body, in diametrical relation, being connected by a duct extending in said body; another pair of ports in said valve body, in diametrical relation, but transverse to said first pair, being connected by a duct extending in said body; so that said four ports are thus connected in pairs in crossed relation; the other four ports in said valve body, which are arranged in alternation with said cross connected ports, being connected in pairs by ducts extending in said body in parallel relation with one of said diametrical ducts; and a handle on said valve extending in cooperative relation with said handle stop means; whereby said valve body may be turned through an arc limited to forty-five degrees, to alternately connect in crossed relation and in parallel relation, the four ports in said closure; and means arranged to circulate a fluid through said valve, including conduits respectively connected with the ports in said end closures.

4. In a multiway valve, the combination with a casing having four ports arranged equidistantly in a circumferential series at one end thereof; of a cylindriform valve body mounted to rotate in said casing and having eight ports arranged in a circumferential series in one plane end thereof and adapted to selectively register with said four ports; one pair of said ports in said valve body, in diametrical relation, being connected by a duct extending in said body; another pair of ports in said valve body, in diametrical relation, but transverse to said first pair, being connected by a duct extending in said body; so that said four valve ports are thus connected in pairs in crossed relation; the other four ports in said valve body, which are arranged in alternation with said cross connected ports, being connected in pairs by ducts extending in said body in parallel relation with one of said diametrical ducts; and means, whereby said valve body may be turned through an arc of forty-five degrees, to alternately connect in crossed relation and in parallel relation, said four end ports.

5. In a multiway valve, the combination with a casing, including a hollow cylindrical wall and having four ports in a circumferential series at one plane end thereof and a valve stem bearing at the other end thereof; of a cylindrical valve body mounted to rotate in said casing and having an axial stem extending through said bearing and provided with a handle; said valve body having eight ports arranged in a circumferential series at one plane end thereof and adapted to selectively register with said four ports; and ducts extending in said valve body transversely thereto, connecting in pairs, ports upon respectively opposite sides thereof; whereby said valve may be turned to alternately connect in crossed relation and in parallel relation, said four end ports.

6. A valve body of circular cross section having eight ports arranged in a circumferential series at one plane end thereof, and ducts extending in said body connecting said ports in pairs; three of said ducts being in parallel relation, and a fourth duct extending transversely to the other three.

7. A valve body of circular cross section having eight ports arranged in a circumferential series at one plane end thereof, and ducts extending in said body connecting said ports in pairs.

In testimony whereof, I have hereunto signed my name at New York, New York, this nineteenth day of February, 1926.

HAROLD W. A. DIXON.