Jan. 23, 1968 D. E. SABLE 3,364,998

WELL PUMP OPERATOR MEANS

Filed Sept. 30, 1965

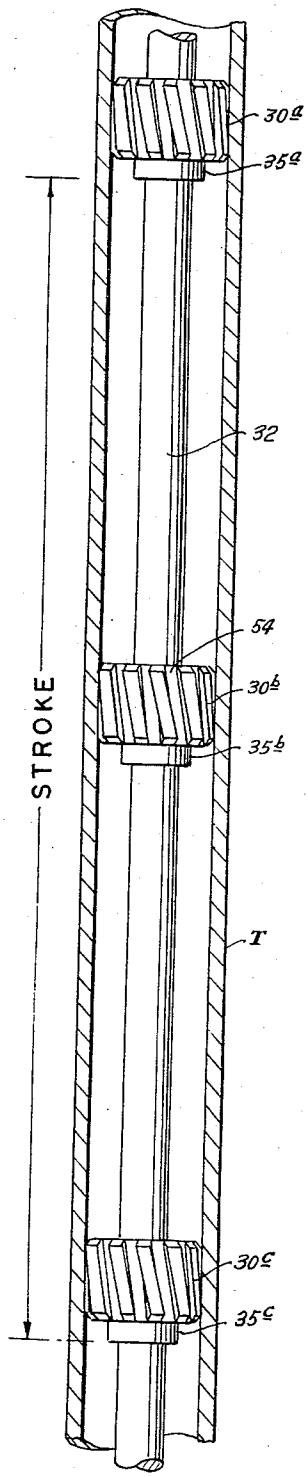

Fig. 2

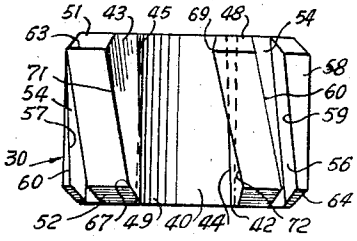

Fig. 3

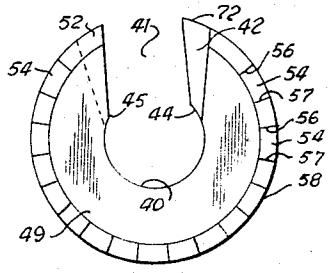

Fig. 4

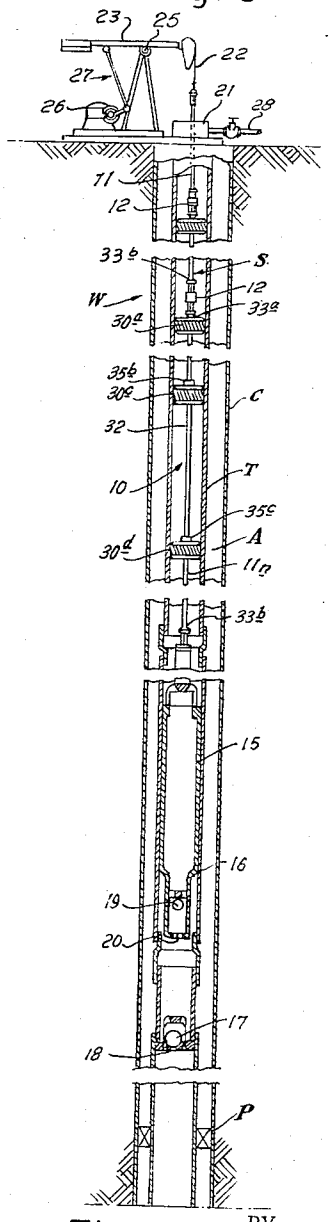

Fig. 1

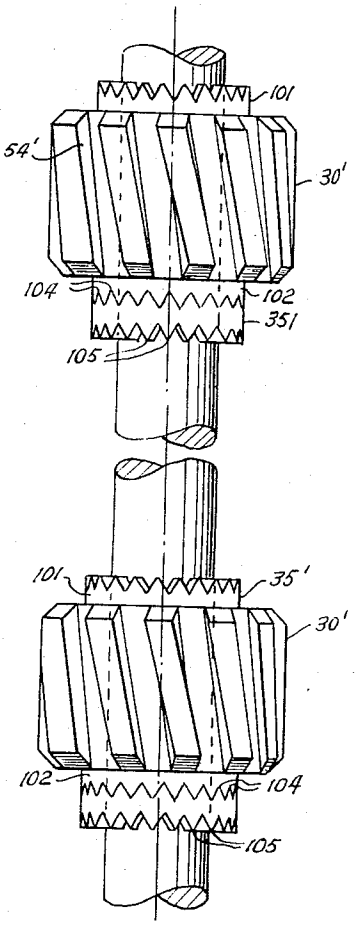

Fig. 5

INVENTOR
Donald E. Sable

BY E. Hastings Ackley
and
Walter J. Jaynes

ATTORNEYS

United States Patent Office 3,364,998
Patented Jan. 23, 1968

3,364,998

WELL PUMP OPERATOR MEANS

Donald E. Sable, 4413 Windsor Parkway, Dallas, Tex. 75205

Filed Sept. 30, 1965, Ser. No. 491,596
10 Claims. (Cl. 166—175)

ABSTRACT OF THE DISCLOSURE

A sucker rod string having a plurality of longitudinally spaced stops and scrapers mounted on the sucker rod string for movement relative to the sucker rod string between the stops, the stops being spaced to cause movement of the scrapers relative to both the sucker rod and the internal surfaces of the well flow conductor during reciprocation of the sucker rod string.

This invention relates to well tools and more particularly to apparatus for pumping liquids from a well.

An object of this invention is to provide a new and improved apparatus for pumping liquids from a well through a flow conductor, such as a string of tubing, by means of a reciprocable operator member, such as a string of sucker rods, whose top is connected at the surface to a drive means for reciprocating the operator member and whose bottom end is connected to a pump disposed in the lower end portion of the tubing whereby the reciprocation of the operator member actuates the pump and causes it to pump liquid upwardly through the string of tubing and past the operator member.

Another object of the invention is to provide a pumping apparatus having means for scraping substantially the full length of the operator member and of the internal surfaces of the tubing during the operation of the pumping apparatus.

Still another object is to provide a pumping apparatus wherein the operator member is provided with a plurality of longitudinally spaced scrapers which prevent the accumulation of paraffin and the like on the operator member and on the internal surfaces of the tubing.

Still another object is to provide a pumping apparatus of the type described wherein the resistance offered by the scrapers to the movement of the operator member is lowest at the time of initiation of each upward and downward stroke of the operator member whereby the variations in the loads to which the operator member and its drive means are subjected are minimized.

A further object is to provide a pumping apparatus wherein the resistance to the movement of the operator member offered by the scrapers is at a minimum at the initiation of either the upward or downward stroke of the operator member and increases only after the operator member has moved approximately one-half the length of its stroke and attained its substantially maximum velocity.

Still another object is to provide a pumping apparatus of the type described wherein the scrapers and the operator member are provided with means to cause the operator member to move relative to the scraper members during substantially one half of each upward and downward stroke of the operator member to prevent accumulation of paraffin on the operator member and to cause the scrapers to move with the operator member during substantially the other one half of each upward and downward stroke of the operator member to cause the scrapers to move with the operator relative to the tubing and prevent accumulation of paraffin and the like on the internal surfaces of the tubing.

A further object is to provide a pumping apparatus wherein the operator member is provided with stop means spaced from one another approximately one-half the length

of the stroke or travel of the operator member in the tubing and wherein a scraper is mounted on the rod between each pair of stop members whereby during substantially the first half of the downward stroke of the operator member the operator member moves downwardly relative to the scrapers and during substantially the succeeding half of the downward stroke of the operator member the stop means engage the scrapers and move the scrapers downwardly in the tubing and, subsequently, during substantially the first half of the suceeding upward stroke the operator member moves relative to the scrapers during the first half of the upward stroke and then moves the scrapers upwardly in the tubing during the last half of the upward stroke.

Another object is to provide a new and improved scraper for a sucker rod which is easily mountable on the sucker rod and which has means for scraping the sucker rod and the internal surfaces of a tubing in which the sucker rod is reciprocably movable.

Still another object is to provide a scraper having passage slots which permit the flow of fluids therepast when the scraper is in a tubing and mounted on a sucker rod.

Briefly stated the operator member embodying the invention includes a sucker rod string formed of a plurality of sucker rods at least some of which have a plurality of longitudinally spaced stop means which are spaced from each other at approximately half the length of the reciprocable movement of the operator member in the tubing and scrapers movably mounted on the shanks of the sucker rods provided with the stop means between each adjacent pair of stop means, whereby during substantially the first half of the downward stroke of the operator member, the operator member moves downwardly relative to the scrapers and during substantially the succeeding half of the downward stroke of the operator member the stop means engage the scrapers and move the scrapers downwardly in the tubing, and subsequentially during substantially the first half of the succeeding upward stroke of the operator member, the operator member moves upwardly relative to the scrapers during the first half of the upward stroke and then the stop means engage the scrapers and move the scrapers upwardly in the tubing during the last half of the upward stroke.

Additional objects and advantages of the invention will be readily apparent from the reading of the following description of a device constructed in accordance with the invention, and reference to the accompanying drawings thereof, wherein:

FIGURE 1 is a schematic illustration of a pumping apparatus for pumping fluids through a string of tubing from the well to the surface;

FIGURE 2 is an enlarged fragmentary partly sectional view showing the relative position of the scrapers relative to the sucker rod on which they are mounted at the instant of completion of the upward stroke of the sucker rod;

FIGURE 3 is a side view of a scraper;

FIGURE 4 is an end view of one of the scrapers; and,

FIGURE 5 is a fragmentary side view of a modified form of the sucker rod stops and scrapers.

Referring now to the drawings, the pumping apparatus **10** is shown in use to pump liquids from a well W to the surface through a string of tubing T which extends through the well casing C to the surface, the annulus A between the string of tubing and the casing adjacent the lower end of the tubing being closed by a packer P. The pumping apparatus includes an operator member or string S of sucker rods **11** which are connected to one another by the usual box or socket connections **12**. The bottom end of the lowermost sucker rod **11***n* is connected to the plunger **15** of any suitable pump P, the plunger being telescoped in the barrel **16** of the pump. The barrel

is provided with a check valve 17, usually referred to as the "standing valve," which permits upward flow into the barrel 16, but prevents downward flow therefrom, through the downwardly opening inlet 18 of the barrel while the hollow plunger is provided with a check valve 19, usually referred to as the "traveling valve," which permits upward flow through the inlet 20 of the plunger and prevents downward flow through the inlet into the barrel. The barrel may constitute a section of the tubing or be positioned in the tubing by suitable lock to latch means.

It will be apparent that when the plunger is in its lowermost position relative to the barrel and is moved upwardly, the well fluids are drawn from the open lower end of the tubing, which is in communication with a producing formation of the well upwardly into the barrel, the standing valve 17 moving to its open position and the traveling valve 19 closing. During this upward movement of the plunger, the plunger moves upwardly in the tubing and moves the well fluids thereabove upwardly. When the plunger is in its upper most position relative to the barrel and is moved downwardly therein, the standing valve closes to prevent downward flow of well fluids from the barrel through the aperture 18 and the traveling valve opens to permit the well fluids in the barrel to flow upwardly into the hollow plunger and then upwardly to the tubing thereabove. During this downward movement of the plunger, the string of sucker rods also moves downwardly through the tubing and therefore during the downward stroke the well fluids are also caused to flow upwardly in the tubing above the plunger as the plunger displaces the well fluids in the barrel upwardly and as an additional length of the sucker rod string moves into the tubing at the surface.

The top end of the top sucker rod of the string extends upwardly through the wellhead 21 and is connected by a flexible member or cable 22 to one end of the usual walking beam 23, the cable extending past the usual horsehead of the beam. The walking beam is oscillated about its pivot 25 by a prime mover, such as an electric motor 26, by a suitable linkage 27. This means for reciprocating the sucker rod string in the tubing being well known, it will not be described in detail. The well fluids pumped from the well are transmitted to a suitable reservoir or point of use by the pipe 28 which is connected to the wellhead.

Each of the sucker rods has two or more scrapers 30 slidably mounted on its shank 32 between the flared stop surfaces 33*a* and 33*b* at opposite ends of the shank. The upward movement of the shank relative to the lowermost scraper 30*d* is limited by the engagement of the scraper with the bottom stop surface 33*b* thereof and downward movement of the shank relative to the top scraper 30*a* is limited by the engagement of its stop surface 33*a* therewith. One or more stop members 35 are rigidly mounted on the shank at distances spaced from each other equal to substantially one-half of the length of the stroke or distance of travel of the string of sucker rods with the uppermost stop member 35*a* being spaced substantially one half the length of the stroke from the stop surface 33*a* and the lowermost stop member 30*d* being spaced substantially one-half the length of the stroke from the stop surface 33*b*. The uppermost scraper 30*a* is thus positioned between the stop member 35*a* and the stop surface 33*a*. The next lower scraper 30*b* is positioned on the shank between the stop members 35*a* and 35*b*, the next lower scraper 30*c* is positioned between the stop members 35*b* and 35*c* and the lowermost scraper 35*d* is disposed between the stop members 35*c* and the stop surface 33*b*. The stop surfaces 33*a* and 33*b* and the stop members thus constitute stops or stop means of the sucker rods engageable with the scrapers 30 to limit longitudinal movement of the sucker rod shank relative to the scrapers. The stops may be in the form of split rings or be U-shaped and be secured to the shank by welding or the like.

Each of the scrapers is in the form of a tubular body and is made of a somewhat resilient durable substance, such as nylon and the like. Each scraper has an internal bore 40 whose diameter is slightly greater than the diameter of the shank 32 of the sucker rod. The external diameter of the scrapers is slightly less than the internal diameter of the tubing in which it is to be employed.

The scraper also has a longitudinal slot 41 defined by the surfaces 42 and 43 which extend convergently inwardly to the longitudinal edges 44 and 45, respectively, at the juncture of the surfaces with the internal surface of the scraper defining the bore 40. The edges 44 and 45 are spaced apart a distance slightly smaller than the external diameter of the shank 32. The surfaces 42 and 43 defining the slot 41 are disposed in planes which extend at angles relative to the central longitudinal axis of the scraper so that the scraper must be tilted about a horizontal axis to permit the shank to be received and moved through the slot 41 and into the bore 40. The scraper flexes resiliently outwardly to permit the reception of the shank within its bore 40 since the inner edges 44 and 45 are spaced apart a distance smaller than the external diameter of the shank. As the shank is received within the bore 40 of the stripper, the scraper is tilted back until its longitudinal axis is concentric with the longitudinal axis of the sucker rod shank and the stripper is then in the position on the shank illustrated in the drawings.

The stripper has top and bottom planar surfaces 48 and 49, respectively, which extend perpendicularly to the longitudinal axis of its bore 40 and with upper and lower outwardly convergent cam surfaces 51 and 52 which facilitate the movement of the scraper past internal obstructions in a tubing.

The outer surface of the scraper is provided with a plurality of circumferentially spaced peripheral passages or slots 54 which extend at an angle to the central longitudinal axis of the scraper and which open upwardly through the upper cam surface 51 of the stripper and downwardly through the lower cam surface 52 thereof. The sides of the slots are defined by the facing surfaces 56 and 57 which at their juncture with the outer surface 58 of the stripper define the edges 59 and 60, respectively. It will be apparent that the side surfaces 56 face downwardly while the side surfaces 57 face upwardly. A top portion of each edge 59 at one side of a slot 54 extends over a bottom portion of the edge 60 at the other side of the slot. The upper and lower cam surfaces 51 and 52 at their juncture with the outer surface 58 of the scraper provide the annular edges 63 and 64 which are, of course, interrupted or cut by the slots 54.

When the stripper 30 is moved upwardly in the well casing, its outer surface 58 tends to slidably engage the internal surfaces of the tubing since the normal external diameter of the stripper is only slightly less than the internal diameter of the tubing due to the lateral movement of the sucker rod string in the tubing caused by vibrations imparted thereto by the pump and the walking beams.

During upward movement of the scraper in the tubing, the scraper tends to engage the internal surface of the tubing along a line from the point 67 at the juncture of the surfaces 43, 52 and 58 to the point 69 at the juncture of the surfaces 42, 51 and 58. The juncture of the surfaces 43 and 58 defines the edge 71 and the juncture of the edges of the surfaces 42 and 58 defines the edge 72, the edges 71 and 72 defining the outermost limits of the slot 41. It will be apparent that during such upward movement of the scraper this line of engagement of the scraper with the internal surfaces is defined by the edges 71, 63 and 60. During downward movement of the scraper in the tubing, the scraper engages the internal surfaces of the tubing along a line from the point 67 to the point 69 along a line defined by the edges 72, 64 and 59.

The narrow circumferential gap between the points 67 and 69 which prevents the line of engagement to be a

closed circle, allows a narrow vertical strip of the internal surface of the tubing not to be scraped by the scraper at any one location of the tubing during any one longitudinal movement of the scraper past such location. Due to the angular inclination of tht peripheral slots **54** relative to the longitudinal central axis of the scraper, and the consequent inclination of the edges **59** and **60** relative to the central axis of the scraper, the frictional engagement of the outer surface of the scraper with the internal surfaces of the tubing during the continuous reciprocating movement of a scraper within the tubing, will cause the scraper to rotate and cause all internal surfaces of the tubing to be scraped thereby. If desired, of course, the slot **41** may be formed at such an angle that the upper portion of the edge **72** will be located over the lower portion of the edge **71**, in which case the line of engagement of the scraper will tend to be in the form of a closed circle and no rotation of the scraper need take place. The line of engagement between the points **67** and **69**, of course, need not necessarily be a continuous line if the scraper must rotate to ensure scraping of the full circular surface of the tubing due to the circumferential gap between the points **67** and **69**.

The pitch, or angular inclination of the slots, may be varied as desired to provide the desired mechanical strength of the scraper and to permit a relatively low resistance to the flow of the well fluids past the scraper.

In use, if the operator member or string S of sucker rods **11** is at the upper end of its stroke, the scrapers on each sucker rod are the positions illustrated in FIGURE 2 wherein the lowermost scraper **30***d* engages the stop surface **33***d* of the sucker rod and the other scrapers **30***c*, **30***b* and **30***a* are engaged by the stops **35***c*, **35***b* and **35***a*, respectively. The sucker rod is now momentarily at rest at the instant of its reversal of its direction of movement from up to down. The oscillation of the walking beam now causes its horsehead to move downwardly permitting the weight of the string of sucker rods and of the plunger of the pump to cause the sucker rod string to start to move downwardly. The force of the frictional engagement of each scraper with the shank of the sucker rod on which it is mounted is considerably less than the force of the frictional engagement of its outer surface **58** with the internal surface of the tubing and, since the shanks are now free to move relative to the scrapers, the scrapers remain stationary as the sucker rods move downwardly therethrough and are scraped thereby. The scrapers now offer a minimum resistance to the downward movement of the sucker rod string through the tubing. As the sucker rod string moves downwardly relative to the scrapers, it moves the plunger of the pump downwardly in its barrel causing the well fluids in the barrel to be displaced upwardly from the barrel and to flow upwardly in the tubing as the sucker rod string moves into the tubing. This upward flow of fluid through the tubing and the passages **54** of the scrapers tends to exert an upward force on the scrapers aiding in holding the scrapers against downward movement in the tubing. As the sucker rod string continues to move downwardly, its movement is accelerated as its inertia and the inertia of the well fluid being displaced upwardly is overcome and, as it approaches substantially the mid-point of its down stroke of travel and attains substantially its maximum velocity of downward movement in the tubing, the upper stop surface **33***a* of each sucker rod engages the top planar surface **48** of the top scraper **30***a* and the stops **35***a*, **35***b* and **35***c* engage the top surfaces **48** of the scrapers **30***b*, **30***c* and **30***d*. The scrapers are then moved downwardly by the sucker rod string in the tubing scraping any paraffin deposits which may be accumulating on the internal surfaces of the tubing. When the sucker rod string reaches the lower limit of its stroke it momentarily comes to rest and then is moved upwardly as the walking beam is pivoted upwardly. At the initiation of the upward movement of the sucker rod string, the scrapers again tend to be stationary in the tubing due to their weight and because the force with which they frictionally engage the internal surfaces of the tubing is considerably greater than the frictional force with which they engage the shanks of the sucker rods. The scrapers, as the sucker rod string moves upwardly therethrough, now scrape off any paraffin which may have deposited on the shanks of the sucker rods. As the sucker rod string begins to move upwardly, the traveling valve of the pump closes and its standing valve opens. The column of well fluids in the tubing above the plunger is moved upwardly and simultaneously well fluids are drawn inwardly into the barrel since the standing valve is now opened. As the inertia of the sucker rod string and of the column of well fluids in the tubing is overcome, the load on the walking beam and on the prime mover which drives it tends to decrease and the velocity of upward movement of the sucker rod increases. As the sucker rod string approaches substantially the mid-point of its upward stroke of movement and its velocity approaches its maximum, the bottom stop surface **33***b* of each sucker rod engages the lowermost stripper **30***d* mounted thereon and the stops **35***c*, **35***b* and **35***a* engage the bottom surfaces of the strippers **30***c*, **30***b* and **30***a* and the strippers are then moved upwardly in the tubing with the sucker rod during the remaining half of the upward stroke.

The strippers thus scrape substantially the full length of each sucker rod during the reciprocation of the sucker rod string in the tubing with the exception of the location of the connections of adjacent ends of adjacent sucker rods. Since at these locations the sucker rods are of greater external dimensions than the external diameter of their shanks, the velocity of flow and the turbulence of the well fluids as they flow past these portions of the sucker rods not scraped by the scrapers is relatively great and paraffin does not tend to accumulate or deposit on these portions. Any paraffin which tends to deposit thereon is removed by such high velocity and turbulent flow of the well fluids therepast. Similarly, no paraffin tends to accumulaate on the external surfaces of the stop members **35** themselves, since there is increase in velocity and in the turbulence in the well fluids flowing therepast during the operation of the sucker rod string as the stop members approach and engage the scrapers.

The sucker rods which are in the zones in the tubing at which paraffin tends to move out of solution or to solidify and deposit on the sucker rods and the tubing are provided with the scrapers and substantially the full length of the tubing at such portions is scraped by the scrapers during the continued reciprocable movement of the operator member or sucker rod string the path of movement of adjacent scrapers overlapping. The distance between adjacent stop surfaces **33***a* and **33***b* of adjacent connected ends of adjacent sucker rods is, of course, considerably shorter than half the length of the stroke of the sucker rod string.

It will be apparent that the sucker rod is moved relative to the scrapers during substantially one-half of each stroke and that the relatively large possible area of frictional engagement of the outer surface **58** of the scrapers with the tubing provides a greater frictional force tending to hold the scrapers against movement in the tubing than the frictional force tending to hold the shanks of the sucker rods against movement relative to the scrapers due to the relatively smaller total possible area of frictional engagement of the sucker rods with the shanks of the sucker rods.

It will be apparent that the scrapers offer a relatively small resistance to the movement of the sucker rod string at the time the velocity of movement of the sucker rod string is low and offer a greater resistance thereto when the velocity of upward movement of the sucker rod reaches substantially its maximum thus minimizing the stresses and strains, or loads, imposed on the sucker rod

string and on the drive means at the surface of the well which reciprocates the sucker rod string in the tubing.

It will further be seen that a pumping apparatus has been illustrated and described wherein the operator member or string S of sucker rods is provided with a plurality of longitudinally spaced scrapers which prevent the accumulation of paraffin and the like on the operator member and on the internal surfaces of the tubing in which the operator member is reciprocated by a drive means at the surface of the well and wherein the scrapers are reciprocated in the tubing by the operator member due to the engagement of spaced stop means of the operator member with the scrapers which limit longitudinal movement of the operator member relative to each scraper.

It will also be seen that stop means are preferably spaced apart a distance substantially equal to one half the length of the stroke of the operator member which is considerably shorter than the length of the sucker rods which forms the operator member. For example, if the sucker rod is twenty-five feet in length and the length of stroke is four feet, either eleven or twelve stops are secured to the sucker rod shank and in the former case twelve, and in the latter case thirteen scrapers are disposed on the shank between the stops and between the top and bottom stops and the top and bottom stop surfaces 33*a* and 33*b* of the sucker rod. In the former case the stops are spaced apart a distance somewhat greater than one half the length of the stroke and in the latter a distance somewhat less than one-half the length of the stroke. Due to the vibrations and the alternate stretching and contraction imparted to the sucker rod string and the tubing string during pumping, and the turbulent flow of the well fluids past the scrapers, the scrapers tend to maintain both the sucker rod and the tubing free of paraffin even though they are spaced apart a distance greater than one-half the length of the stroke. In any case, the stops must be spaced apart a distance somewhat smaller than the full length of the stroke.

It will further be seen that the resistance to the movement of the operator member caused by the engagement thereof with the scrapers is lowest at the time of initiation of each upward and downward stroke of the operator member whereby the variations in the loads to which the operator member and its drive means are subjected during the operation of the pumping apparatus are minimized.

It will further be apparent that the stop means of the operator means are spaced along the length of the operator member to cause the operator member to move relative to the scrapers during substantially one half of each upward and downward stroke of the operator member in the tubing and to cause the scrapers to move with the operator member during substantially the second half of each upward and downward stroke of the operator member.

It will further be seen that a new and improved scraper for sucker rods has been illustrated and described which is easily mountable on a sucker rod and which has means for scraping the sucker rod and the internal surfaces of a tubing in which the sucker rod is reciprocably movable.

It will also be seen that a scraper has been illustrated and described which has external longitudinally extending slots which permit the flow of well fluids therepast when the scraper is in the tubing and mounted on a sucker rod and that the scraper has external surfaces which engage the scraper along a substantially continuous circular line.

Referring now to FIGURE 5 of the drawing, the scrapers **30'** and the stops **35'** are substantially similar to the scrapers **30** and stops **35** of the pumping apparatus illustrated in FIGURE 11 and accordingly have been provided with the same reference numerals to which subscript "'" has been added. The scrapers **30'** have longitudinally oppositely extending flanges **101** and **102** which extend about the scraper to the sides of the slot **41'** and which are provided with teeth **103**. The stops **35'** are provided at their upper and lower edges with teeth **104** and **105**, the downwardly facing teeth on the lower edge of one stop **35'** being offset circumferentially a short distance, less than one tooth, from the teeth **104** in the upper edge of the next lower stop member. The provisions of these serrated flanges **101** and **102** and the stop members **35'** provided with teeth so offset causes each scraper to be rotated due to the meshing of the teeth of its upper and lower flanges alternately with the lower and upper teeth of the stop members between which it is mounted on the shank **32** of the sucker rod **11**.

It will be apparent that the provision of such toothed stop members and scrapers with such flanges will insure the scrapers will rotate in a predetermined direction about the sucker rod shanks during the reciprocation of the sucker rod string in the tubing which may be desirable in some well installations if the slots of the scrapers through which the shanks move into the bores of the scrapers are of such pitch or inclination relative to the central axis of the scrapers that the outer edges thereof do not overlap longitudinally.

It will now be seen that while it is preferable that the stop means of the sucker rods, between each adjacent pair of scrapers are mounted, be spaced substantially one half the length of the stroke of the sucker rod string to reduce the number of stop members and scrapers, to ensure that the sucker rod string attains substantially its full velocity during which stroke before the stop means engage the scrapers, to minimize the resistance offered by the scrapers to the movement of the sucker rod string, and at the same time ensure that the full length of the tubing be scraped, the stop means could be spaced apart a distance less than one half the length of the stroke, e.g., one third the length in which case the sucker rod string would travel only one third the length of its stroke before the stop means would engage the scrapers and the scrapers would then be moved thereby during the remaining two thirds of its stroke.

The foregoing description of the invention is explanatory only, and changes in the details of the construction illustrated may be made by those skilled in the art, within the scope of the appended claims, without departing from the spirit of the invention.

What is claimed and desired to be secured by Letters Patent is:

1. An operator member reciprocable in a tubing of a well for actuating a pump which moves well fluids upwardly through the tubing, said operator member comprising: a plurality of sucker rods connected at adjacent ends thereof to constitute said operator member, each of said rods having an elongate shank, at least some of said rods having a plurality of longitudinally spaced stop means, adjacent ones of said stop means of each of said rods being spaced from each other a distance substantially equal to one half the length of the reciprocable movement of said operator member in a tubing; and a scraper movably mounted on said shank between each adjacent pair of stop means, each of said scrapers having a longitudinal bore in which the shank of the rod on which it is mounted is received, said scrapers having passage means permitting flow of fluids therepast in a tubing.

2. An operator member reciprocable in a tubing of a well for actuating a pump which moves well fluids upwardly through the tubing, said operator member comprising: a plurality of sucker rods connected at adjacent ends thereof to constitute said operator member, each of said rods having an elongate shank, at least some of said rods having a plurality of longitudinally spaced stop means, adjacent ones of said stop means of each of said rods being spaced from each other a distance substantially equal to one half the length of the reciprocable movement of said operator member in a tubing; and a scraper mounted on said shanks between each adjacent pair of stop means, each of said scrapers having a longitudinal bore in which the shank of the rod on which it is mounted is received, each of said scrapers having a longitudinal

slot opening from the exterior thereof to said bore of said scraper through which the shank of a sucker rod is movable into said bore and a plurality of circumferentially spaced flow passages.

3. An operator member reciprocable in a tubing of a well for actuating a pump which moves well fluids upwardly through the tubing, said operator member comprising: a plurality of sucker rods connected at adjacent ends thereof to constitute said operator member, each of said rods having an elongate shank, at least some of said rods having a plurality of longitudinally spaced stop means, adjacent ones of said stop means of each of said rods being spaced from each other a distance substantially equal to one half the length of the reciprocable movement of said operator member in a tubing; and a scraper mounted on said shanks between each adjacent pair of stop means, each of said scrapers having a longitudinal bore in which the shank of the rod on which it is mounted is received, each of said scrapers having a longitudinal slot opening to its longitudinal bore through which said shank is movable into said bore and a plurality of circumferentially spaced outwardly opening slots, said slots extending at an angle to the longitudinal central axis of said bore whereby the external surfaces of said scrapers tend to provide a continuous line of engagement between opposite sides of said mounting slots with the internal surfaces of tubing in which it is disposed.

4. An operator member reciprocable in a tubing of a well for actuating a pump which moves well fluids upwardly through the tubing, said operator member comprising: a plurality of sucker rods connected at adjacent ends thereof to constitute said operator member, each of said rods having an elongate shank, at least some of said rods having a plurality of longitudinally spaced stop means, adjacent ones of said stop means of each of said rods being spaced from each other a distance substantially equal to one half the length of the reciprocable movement of said operator member in a tubing; and a scraper mounted on said shanks between each adjacent pair of stop means, each of said scrapers having a longitudinal bore in which the shank of the rod on which it is mounted is received, each of said scrapers having a longitudinal slot opening to its longitudinal bore through which said shank is movable into said bore and a plurality of circumferentially spaced outwardly opening slots.

5. An operator member reciprocable in a tubing of a well for actuating a pump which moves well fluids upwardly through the tubing, said operator member comprising: a plurality of sucker rods connected at adjacent ends thereof to constitute said operator member, each of said rods having an elongate shank, at least some of said rods having a plurality of longitudinally spaced stop means, adjacent ones of said stop means of each of said rods being spaced from each other a distance substantially equal to one half the length of the reciprocable movement of said operator member in a tubing; and a scraper movably mounted on said shank between each adjacent pair of stop means, each of said scrapers having a longitudinal bore in which the shank of the rod on which it is mounted is received, said scrapers having passage means permitting flow of fluids therepast in a tubing, said longitudinal bores of said scrapers having diameters slightly greater than the external diameters of said shanks, said scrapers having external diameters slightly smaller than the internal diameter of the tubing.

6. An operator member reciprocable in a tubing of a well for actuating a pump which moves well fluids upwardly through the tubing, said operator member comprising: a plurality of sucker rods connected at adjacent ends thereof to constitute said operator member, each of said rods having an elongate shank, at least some of said rods having a plurality of longitudinally spaced stop means, adjacent ones of said stop means of each of said rods being spaced from each other a distance substantially equal to one-half the length of the reciprocable movement of said operator member in a tubing; and a scraper mounted on said shanks between each adjacent pair of stop means, each of said scrapers having a longitudinal slot opening from the exterior thereof to said bore of said scraper through which the shank of a sucker rod is movable into said bore and a plurality of circumferentially spaced flow passages, said longitudinal bores of said scrapers having diameters slightly greater than the external diameters of said shanks, said scrapers having external diameters slightly smaller than the internal diameter of the tubing.

7. An operator member reciprocable in a tubing of a well for actuating a pump which moves well fluids upwardly through the tubing, said operator member comprising: a plurality of sucker rods connected at adjacent ends thereof to constitute said operator member, each of said rods having an elongate shank, at least some of said rods having a plurality of longitudinally spaced stop means, adjacent ones of said stop means of each of said rods being spaced from each other a distance substantially equal to one-half the length of the reciprocable movement of said operator member in a tubing; and a scraper mounted on said shanks between each adjacent pair of stop means, each of said scrapers having a longitudinal bore in which the shank of the rod on which it is mounted is received, each of said scrapers having a longitudinal slot opening to its longitudinal bore through which said shank is movable into said bore and a plurality of circumferentially spaced outwardly opening slots, said slots extending at an angle to the longitudinal central axis of said bore whereby the external surfaces of said scrapers tend to provide a continuous line of engagement between opposite sides of said mounting slots with the internal surfaces of tubing in which it is disposed, said longitudinal bores of said scrapers having diameters slightly greater than the external diameters of said shanks, said scrapers having external diameters slightly smaller than the internal diameter of the tubing.

8. An operator member reciprocable in a tubing of a well for actuating a pump which moves well fluids upwardly through the tubing, said operator member comprising: a plurality of sucker rods connected at adjacent ends thereof to constitute said operator member, each of said rods having an elongate shank, at least some of said rods having a plurality of longitudinally spaced stop means, adjacent one of said stop means of each of said rods being spaced from each other a distance substantially equal to one-half the length of the reciprocable movement of said operator member in a tubing; and a scraper mounted on said shanks between each adjacent pair of stop means, each of said scrapers having a longitudinal bore in which the shank of the rod on which it is mounted is received, each of said scrapers having a longitudinal slot opening to its longitudinal bore through which said shank is movable into said bore and a plurality of circumferentially spaced outwardly opening slots, said longitudinal bores of said scrapers having diameters slightly greater than the external diameters of said shanks, said scrapers having external diameters slightly smaller than the internal diameter of the tubing.

9. An operator member reciprocable in a tubing of a well for actuating a pump which moves well fluids upwardly through the tubing, said operator member comprising: a plurality of sucker rods connected at adjacent ends thereof to constitute said operator member, each of said rods having an elongate shank, at least some of said rods having a plurality of longitudinally spaced stop means, adjacent ones of said stop means being spaced from each other a distance substantially less than the length of the reciprocable movement of said operator member in a tubing; and a scraper movably mounted on said shank between each adjacent pair of stop means, each of said scrapers having a longitudinal bore in which the shank of the rod on which it is mounted is received, each of said scrapers having a longitudinal slot opening to its

longitudinal bore through which said shank is movable into said bore and a plurality of circumferentially spaced slots permitting flow of fluids past said scraper in a tubing, said longitudinal bores of said scrapers having diameters slightly greater than the external diameters of said shanks, said scrapers having external diameters slightly smaller than the internal diameter of the tubing, said scrapers being frictionally engageable with the tubing for causing said scrapers to tend to remain stationary in the tubing and be movable therein by the force exerted thereon by said stop means when engaged thereby.

10. An operator member reciprocable in a tubing of a well for actuating a pump which moves well fluids upwardly through the tubing, said operator member comprising: a plurality of sucker rods connected at adjacent ends thereof to constitute said operator member, each of said rods having an elongate shank, at least some of said rods having a plurality of longitudinally spaced stop means, adjacent ones of said stop means being spaced from each other a distance substantially less than the length of the reciprocable movement of said operator member in a tubing; and a scraper movably mounted on

said shank between each adjacent pair of stop means, each of said scrapers having a longitudinal bore in which the shank of the rod on which it is mounted is received, said scrapers having passage means permitting flow of fluids therepast in a tubing, said longitudinal bores of said scrapers having diameters slightly greater than the external diameters of said shanks, said scrapers having external diameters slightly smaller than the internal diameter of the tubing, said stop means and said scrapers having co-engageable means for imparting rotational movement to said scrapers.

References Cited

UNITED STATES PATENTS

2,295,058	9/1942	Smethers	166—175
2,997,106	8/1961	Tripplehorn	166—176
3,058,524	10/1962	Tripplehorn	166—176
3,083,772	4/1963	Tripplehorn	166—176
3,273,648	9/1966	Barnard	166—175

CHARLES E. O'CONNEL, *Primary Examiner.*

UNITED STATES PATENT OFFICE

CERTIFICATE OF CORRECTION

Patent No. 3,364,998

January 23, 1968

Donald E. Sable

It is certified that error appears in the above identified patent and that said Letters Patent are hereby corrected as shown below:

Column 10, line 3, after "longitudinal" insert -- bore in which the shank of the rod on which it is mounted is received, each of said scrapers having a longitudinal --.

Signed and sealed this 26th day of August 1969.

(SEAL)
Attest:

Edward M. Fletcher, Jr.
Attesting Officer

WILLIAM E. SCHUYLER, JR.
Commissioner of Patents