N. C. NAYLOR.

GEAR WHEEL.

APPLICATION FILED MAR. 15, 1909.

929,781. Patented Aug. 3, 1909.

Fig. 1.

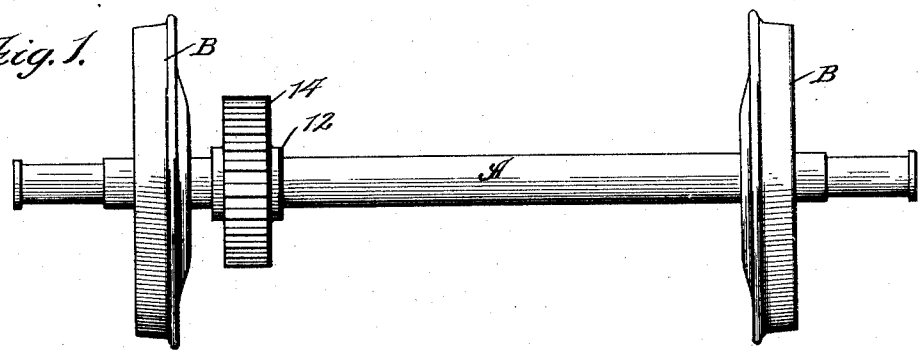

Fig. 2.

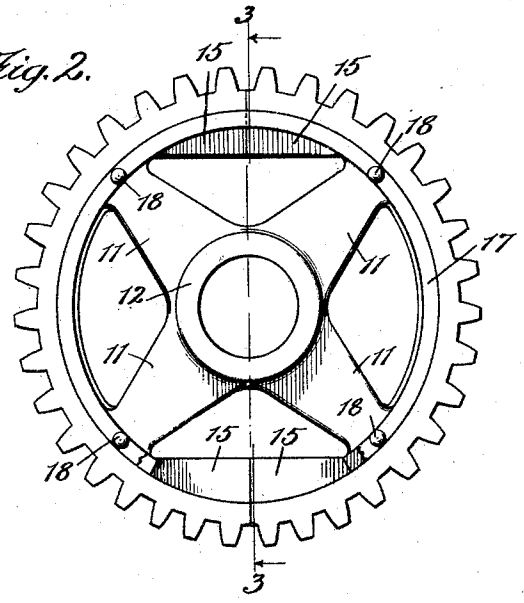

Fig. 3.

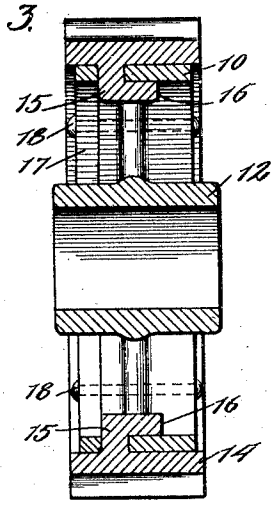

Fig. 4.

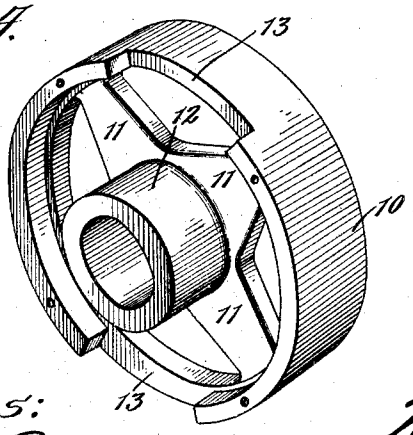

Fig. 5.

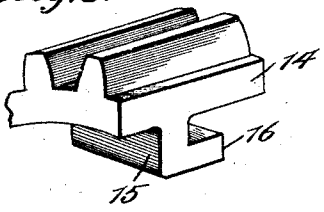

Witnesses:

W. A. D. Perry

Albert J. Sauer

Inventor:

Norman C. Naylor

By Bond, Adams, Pickard & Jackson

Att'ys

ANDREW. B. GRAHAM CO., PHOTO-LITHOGRAPHERS, WASHINGTON, D. C.

UNITED STATES PATENT OFFICE.

NORMAN C. NAYLOR, OF CHICAGO, ILLINOIS.

GEAR-WHEEL.

No. 929,781. Specification of Letters Patent. Patented Aug. 3, 1909.

Application filed March 15, 1909. Serial No. 483,497.

To all whom it may concern:

Be it known that I, NORMAN C. NAYLOR, a citizen of the United States, residing at Chicago, in the county of Cook and State of Illinois, have invented certain new and useful Improvements in Gear-Wheels, of which the following is a specification, reference being had to the accompanying drawings.

This invention relates to gear-wheels and particularly to that class or kind of gear-wheels comprising two principal members, a body portion adapted to be securely affixed to a shaft and an outer tooth-bearing portion adapted to be removably secured to the said body portion.

The invention has for its object to provide improved means for interlocking said parts together so as to render the device as a whole as strong and unyielding in all respects when in operative engagement with another gear as if of the usual solid or one-piece construction.

A further object is to provide simple and effective means for holding said parts interlocked.

I accomplish these objects by the means shown in the drawings and hereinafter specifically described.

That which I believe to be new will be set forth in the claims.

In the accompanying drawings,—Figure 1 is an elevation showing an ordinary car-axle and wheels secured thereon, with my improved gear secured also to said axle between said wheels; Fig. 2 is a face view of one of my improved gears, the retaining ring for holding the two principal members thereof being partly broken away; Fig. 3 is a vertical section taken at line 3—3 of Fig. 2; Fig. 4 is a perspective view of the body portion of the device that is adapted to be secured rigidly to an axle or shaft and with which the tooth-bearing member is adapted to be interlocked; and Fig. 5 is an enlarged detail, being a portion of the tooth-bearing member and showing one of the lugs carried on the inner face thereof to engage the body portion.

Referring to the several figures of the drawings, in which corresponding parts are indicated by like reference characters,—

A indicates a car-axle and B wheels secured thereon, to which axle A near one of the wheels is secured my improved gear about to be described. I have shown the improved gear in this connection for the reason that it is in such a situation that a device of this character is of especial value for the reason that on such an axle the wheels and the usual solid gear employed in connection with electrically-operated cars are of necessity very tightly pressed or forced upon the axle, and it is evident that if a tooth of the gear breaks, necessitating the removal of the gear and its replacement by another, the work involved is very considerable when the gear is of the usual solid type. While my improved device is of especial value, therefore, in connection with such axles, I, of course, do not wish to be understood as confining it to such use.

The body portion or inner member of my improved gear is composed of a wide rim 10, a spider or web portion 11, and a hub 12. 13—13 indicate two wide notches formed in one edge of the rim 11, such notches being, in the construction shown, at opposite points in such edge.

14—14 indicate two similar segments of a size to fit upon the rim 10, these two segments when together constituting the outer member of the device. They are each provided, as shown, with teeth on their outer faces. At each of its ends each segment is provided on its inner face with a lug 15 having a turned end to form a flange 16, said lug and its flange forming in effect a hook, the said flange portion 16 being at a distance from the inner face of the member 15 just sufficient to receive a portion of the rim 10 in the space between the segment and said flange. The face of the flange is to be curved to conform to the curvature of the inner face of the rim which lies in contact therewith.

In assembling the parts the toothed segments 14 are placed in position upon the rim 10 by sliding them on at that side of the rim in which the notches 13 are formed, the segments being so positioned on the rim that the two hook-shaped lugs 15—16 at the abutting ends of the segments will enter and snugly fit in each notch 13. The two principal members 10 and 14 will thus be securely interlocked as the flange portions 16 of each lug pass beneath and fit closely against the inner face of the rim 10, and, as clearly shown in the lower part of Fig. 2, each pair of lugs at the abutting ends of the segments fits snugly within one of the notches 13, so that when the device is subjected to strain in use there can be no possibility of there being the slightest relative movement between the

two principal members. These two members 10 and 14 are maintained in their interlocked position by means of a ring 17 that fits against one edge of the rim 10 and against the outer faces of the lugs 15—said outer faces being flush with said edge—and is secured in place by rivets 18, as shown, or otherwise. I prefer to use rivets notwithstanding that it involves a little more labor to remove them when it is desired to replace an old segment or set of segments with a new one or a new set than it would to remove certain other fastenings, as for example, bolts, because of the fact that owing to the rough work to which the device is liable to be subjected, particularly in the case of car-axles, rivets are more to be depended upon.

That which I claim as my invention, and desire to secure by Letters Patent, is,—

1. In a device of the class described, the combination with a body portion having a rim provided with a plurality of notches formed in one edge thereof, said notches being open toward one edge of the rim and closed in the direction of the other edge of the rim, of a plurality of toothed segments fitting upon said rim, each of said segments having on its under face a lug at each end, the adjacent lugs of two segments fitting within one of said notches, and means for securing said rim and segments against separation.

2. In a device of the class described, the combination with a body portion having a rim provided with a plurality of notches formed in one edge thereof, of a plurality of toothed segments fitting upon said rim, each of said segments having on its under face a flanged lug at each end, the adjacent lugs of two segments fitting within one of said notches and their flange portions extending beneath the said rim, and means for securing said rim and segments against separation.

3. In a device of the class described, the combination with a body portion having a rim provided with a plurality of notches formed in one edge thereof, of a plurality of toothed segments fitting upon said rim, each of said segments having on its under face a lug at each end, the adjacent lugs of two segments fitting within one of said notches, a ring fitting against the notched edge of the rim and the lugs in said notches, and fastening devices for securing said ring to said rim.

4. In a device of the class described, the combination with a body portion having a rim provided with a plurality of notches that are open toward one edge of the rim and closed in the direction of the other edge of the rim, of a plurality of segments having means adapted to fit in said notches to interlock said rim and segments.

5. In a device of the class described, the combination with a body portion having a rim provided with a plurality of notches formed in one edge thereof, of a plurality of segments fitting upon said rim, each of said segments having on its under face a flanged lug adapted to enter one of said notches with its flange portion extending beneath the said rim, and means for securing said rim and segments together.

6. In a device of the class described, the combination with a body portion having a rim provided with a plurality of notches formed in one edge thereof, of another rim fitting upon said first-mentioned rim and having a plurality of flanged lugs adapted to enter said notches with their flange portions extending beneath said notched rim, and means for securing said two together.

NORMAN C. NAYLOR.

Witnesses:

MINNIE C. HUNTER,

ALBERT H. ADAMS.