Jan. 21, 1947. G. A. SCHUTTLER 2,414,487

SCREENING DEVICE

Filed Oct. 30, 1944

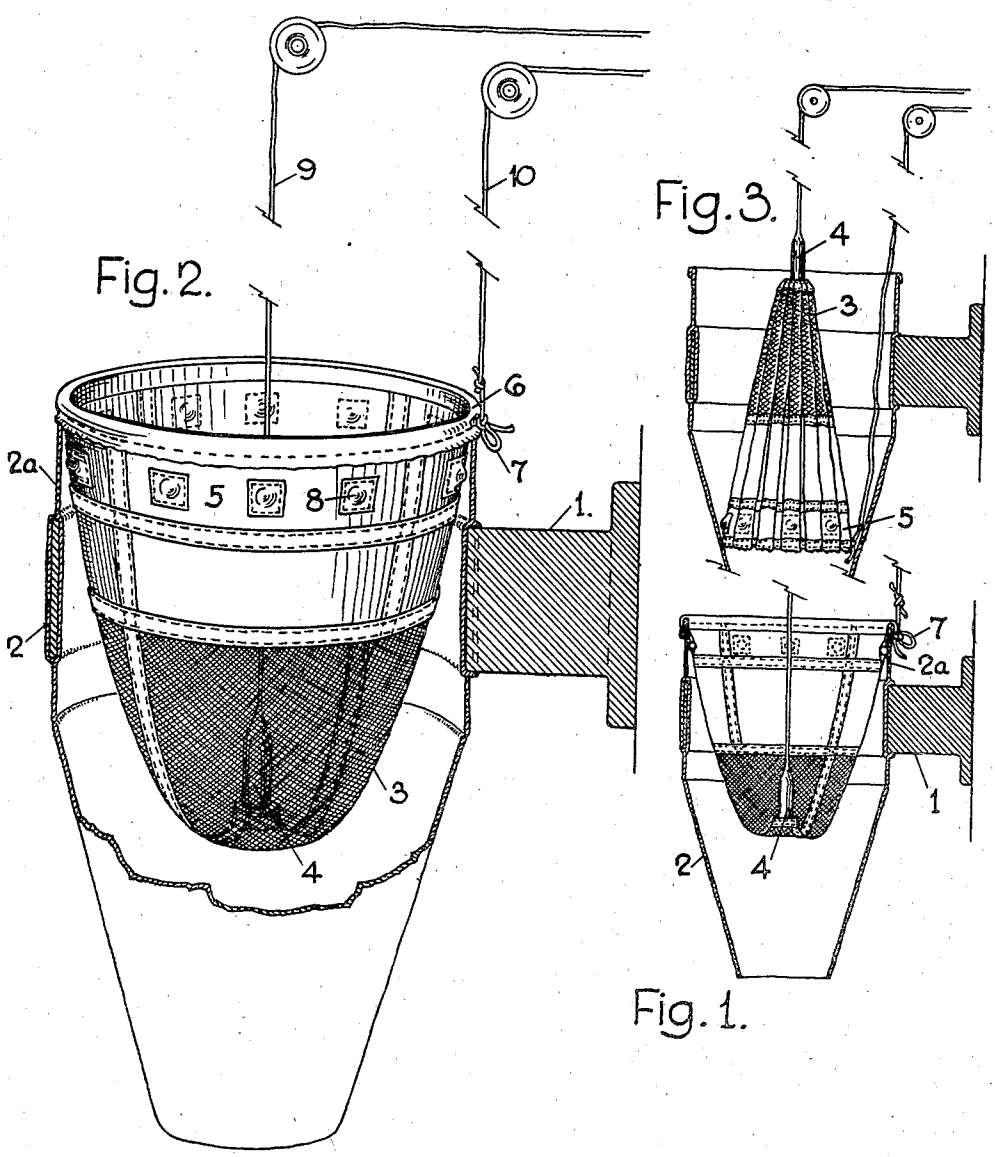

Fig. 2.

Fig. 3.

Fig. 1.

Inventor

Gustave A. Schuttler

By C. E. Herrstrom and W. E. Thibodeau

Attorney

Patented Jan. 21, 1947

2,414,487

UNITED STATES PATENT OFFICE

2,414,487

SCREENING DEVICE

Gustave A. Schuttler, Dover, N. J.

Application October 30, 1944, Serial No. 561,145

4 Claims. (Cl. 210—152)

(Granted under the act of March 3, 1883, as amended April 30, 1928; 370 O. G. 757)

1

The invention described herein may be manufactured and used by or for the Government for governmental purposes, without the payment to me of any royalty thereon.

The present invention relates to a means for cleaning and emptying so called "jelly bag" screeners.

In the process of manufacturing certain mixed explosives, requirements arise whereby explosives have to be screened through a screen of relatively fine mesh. In such screening operations, any residue or lumpy portions of explosives have to be withdrawn from the screener in order that continued operations can be carried on. Heretofore, to remove such lumpy residue the operator was required to go behind the heavy barricade (where the screening operations are carried on) and manually and physically remove the lumpy residue by hand. In the handling of highly explosive compositions, such as diszodinitrophenol, tetrazene, lead azide, mercuric fulminate, and pentaerythritoltetranitrate, considerable hazard exists in extracting any of the explosives indicated above by hand operation, due to the fact that any of the said explosive can be "set off" by mere friction. The seriousness of the hazard existent in the screening of any of the explosives mentioned above is evidenced by the fact that all screening is done behind an 18 inch re-inforced concrete-steel barricade and all operations remotely controlled with the sole exception of the removal of the lumpy residue by hand as indicated above.

The present invention has as its primary object the provision of means for avoidance of withdrawal of the lumpy residual explosive composition by hand and the provision of further means for cleaning and removing the residue by remote control operation.

The invention can be best understood from the following description to be read in view of the accompanying sheet of drawing in which:

Figure 1 is a cross sectional view of the preferred embodiment of the invention.

Figure 2 is a view in perspective, parts thereof being partly broken away.

Figure 3 is a view in cross section showing the last stage of operation of the invention hereinafter described.

Referring to the drawing, 1 indicates the bracket which serves to support the screening device, said bracket being affixed to the wall of the barricade. Secured to the bracket is a leather container 2, having an extended upright portion 2*a*, which is cone shaped and opened at the bottom to permit the screened explosive composition to fall into a suitable type of container (not shown). Forming an essential part of the screener is a cloth 3 of suitable mesh, dependent upon the type of explosive to be screened. Secured to the bottom of screen 3 is a lead weight 4 suitably covered by suede leather that would prevent any possibility of sparking or accidental detonation. The screen 3 is so designed as to have a hem 5 of cloth which extends above the container 2 to an extent of approximately 5 inches. Forming part of the hem 5 is a stitched portion 6 which normally overlaps the upper end of the hem and which has contained therein a cord 7, the function of which will be more fully hereinafter described. Contained within the hem portion 5 and circumferentially positioned about the bag are a number of lead balls 8 approximately ½'' in diameter.

2

The operation of the device can be briefly described as follows: the amount of explosive composition desired to be screened is dumped into the screener 3 by remote control and is conventionally agitated by remote control by movement of the cord 9 (secured to the weight 4), which is operated from without the barricade. The screened explosive falls into a container positioned beneath the screening device and is withdrawn by any conventional means. A new receptacle is then placed beneath the screener to serve as a means for receiving the lumpy residual explosive contained within the screener 3. The operator of the device then pulls cord 10 from a location outside of the barricade which causes a loosening of the cord 7, as by the disengagement of a slip knot, causing portion 6 to be raised from the lip of the elevated portion 2*a* forming part of container 2. The lead ball weights will cause the screen 3 to collapse to the inverted position shown in Fig. 3 within the container 2. The operator of the device will then pull the cord 9 upwardly causing the screener to assume the position shown in Figure 3 resulting in the dropping or dumping of any residue explosive composition into the receptacle at the bottom of the screener. The lumpy residue can then be removed in the same manner as is the screened explosive.

While there has been herein described one particular modification of the invention, it is to be understood that changes in design can be made without departing from the spirit and scope of the invention.

I claim:

1. A screening device comprising an open top collapsible body having an upper portion of flex-

ible material and a lower portion of screening material, weights arranged around the body adjacent its upper end to facilitate its collapse, a support for the body, means removably attaching the body to the support, means operable from a point remote from the body to release the attaching means to release the body from its support, a weight interiorly secured to the lower end of the screening material, a cord secured to the weight and operable from a remote point whereby material in the body may be agitated by successive comparatively short pulls upon the cord, said cord also functioning upon a continuous pull to turn the body inside-out in inverted position to dump the residue of the screened material after the body has been released from its support.

2. A screening device comprising an open top cone-shaped collapsible body having an upper portion of flexible material and a lower portion of screening material, weights adjacent the upper edge of said upper portion to facilitate the collapse of the body, an annular support for the body, an annulus of flexible material secured to said body and overlapping said support, a cord temporarily securing the annulus and thereby the body to a support, said cord being remotely controlled to release the body from its support, a weight secured interiorly of the bottom of the

screening portion, and a cord secured to the weight and remotely controlled for operating the weight for agitating the material being screened upon successive comparatively short pulls, said cord also operable upon a continuous pull to turn the body inside-out in inverted position to dump the residue of the screened material after the bag has been released from the support.

3. The invention of claim 2, characterized in that the support of the body is an open top cylinder of non-metallic material and having an open truncated-cone-shaped lower portion to direct the screened material and the residue of such material out of said lower portion.

4. A screening device comprising an open top collapsible body having an upper portion of flexible material and a lower portion of screening material, a support for said body, means removably attaching the bag to the support, a remote control cord having operable connection with said attaching means whereby said body may be released from its support, a cord interiorly connected with the screening material and functioning upon a continuous pull to turn the body inside-out in inverted position to dump the residue of the screening material, and weights carried by the upper portion of the body to facilitate its collapse after the body has been released from its support.

GUSTAVE A. SCHUTTLER.