US 20150132141A1

(19) **United States**

(12) **Patent Application Publication**

Stege et al.

(10) **Pub. No.: US 2015/0132141 A1**

(43) **Pub. Date: May 14, 2015**

(54) **ROTOR BLADE OF A WIND TURBINE**

(71) Applicants: **Jason Stege**, Brande (DK); **Henrik Stiesdal**, Odense C (DK); **Alonso O. Zamora Rodriguez**, Boulder, CO (US); **Arni T. Steingrimsson**, Erie, CO (US); **Kevin J. Standish**, Erie, CO (US)

(72) Inventors: **Jason Stege**, Brande (DK); **Henrik Stiesdal**, Odense C (DK); **Alonso O. Zamora Rodriguez**, Boulder, CO (US); **Arni T. Steingrimsson**, Erie, CO (US); **Kevin J. Standish**, Erie, CO (US)

(73) Assignee: **SIEMENS AKTIENGESELLSCHAFT**, Munich (DE)

(21) Appl. No.: **14/074,786**

(22) Filed: **Nov. 8, 2013**

Publication Classification

(51) **Int. Cl.**
F01D 5/14 (2006.01)

(52) **U.S. Cl.**
CPC ***F01D 5/141*** (2013.01)

(57) **ABSTRACT**

A rotor blade of a wind turbine with a raked tip portion is provided. The tip portion is raked, i.e. curved, in a rotor blade plane comprising the tip base chord and a line which is parallel to the pitch axis of the rotor blade. Additionally, the orientation of the chords with reference to the chord at the tip base changes between the tip base and the tip. In other words, the trailing edge of the tip portion is twisted. Optionally, the tip portion is additionally swept out of the rotor blade plane, which is characterized by a cant angle.

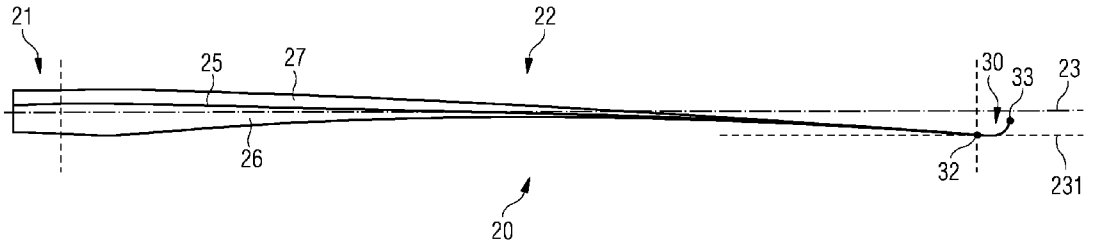

FIG 1

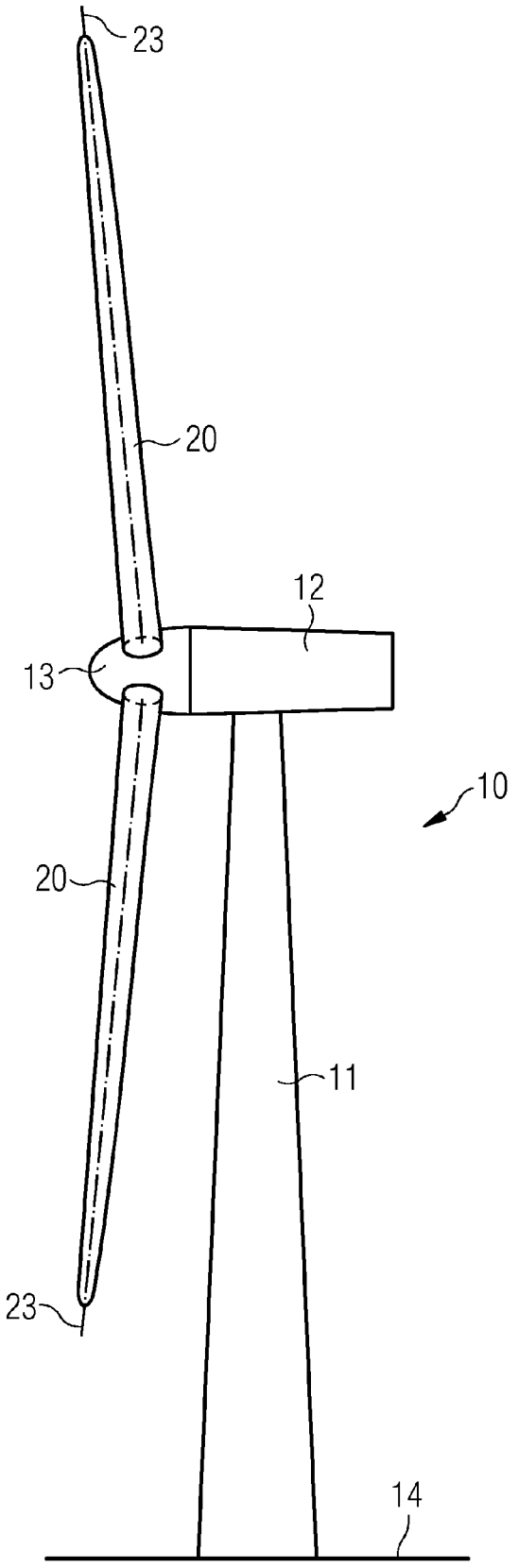

FIG 2

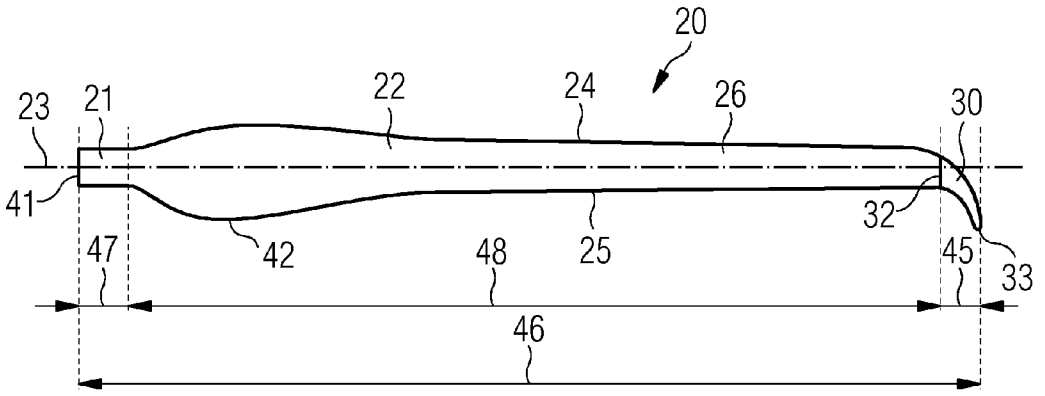
20
23
21
22
24
26
30
41
42
25
32
47
48
45
33
46

FIG 3

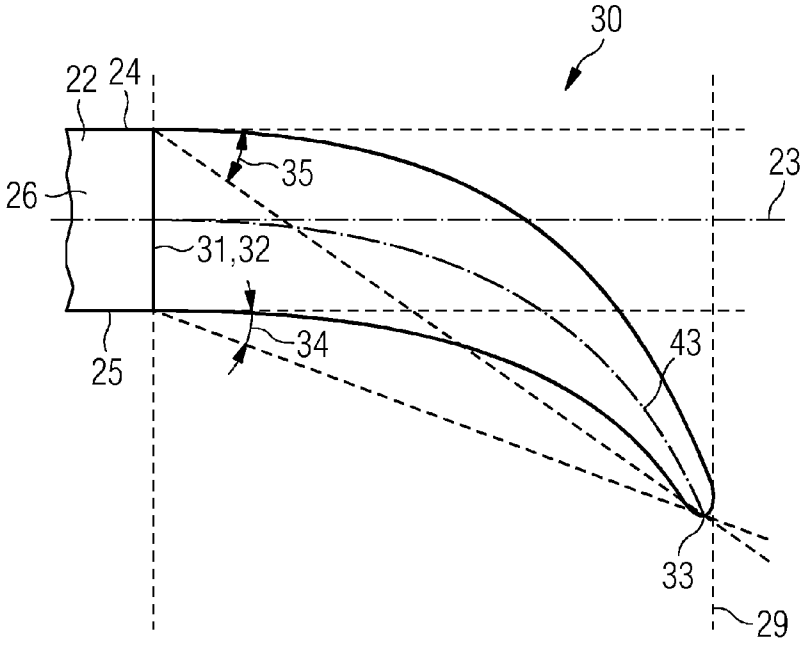
30
22
24
26
35
23
31,32
34
25
43
33
29

FIG 4

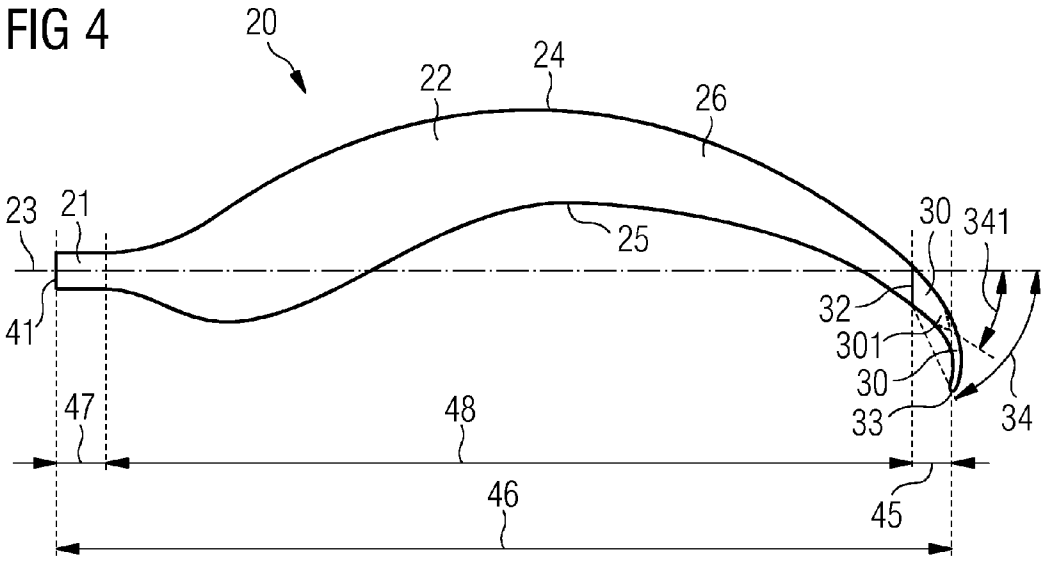
20
22
24
26
23
21
25
30
341
41
32
301
30
33
34
47
48
46
45

FIG 5

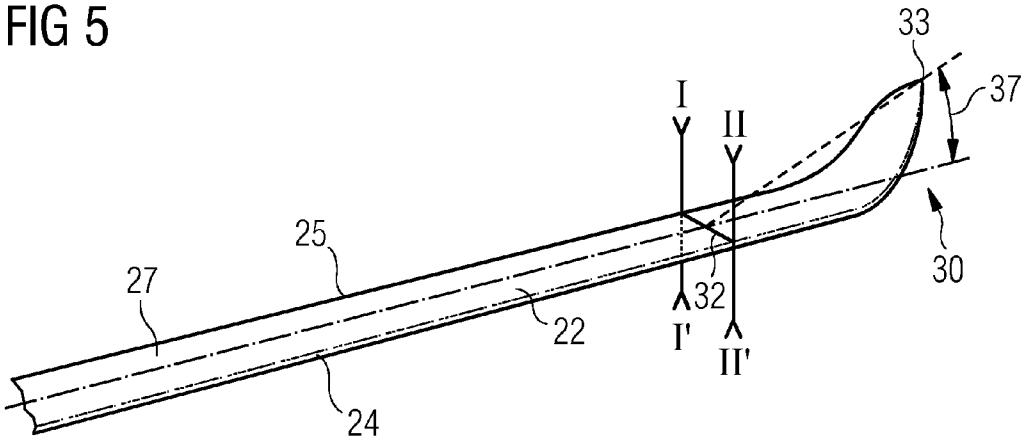
33
37
I
II
25
27
22
32
30
I'
II'
24

FIG 6

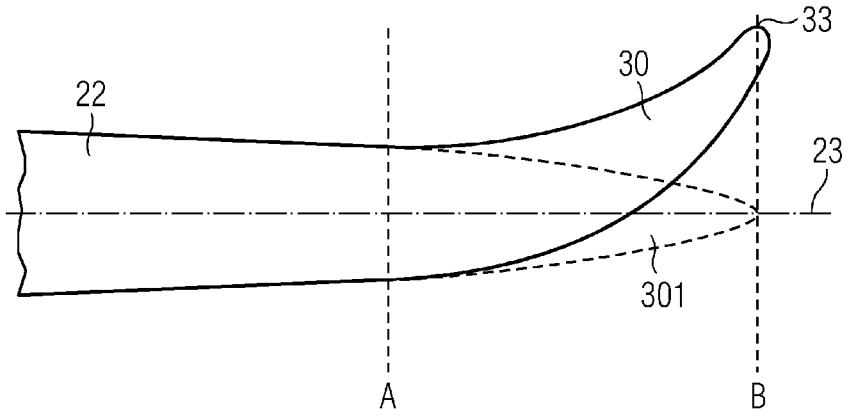

FIG 7

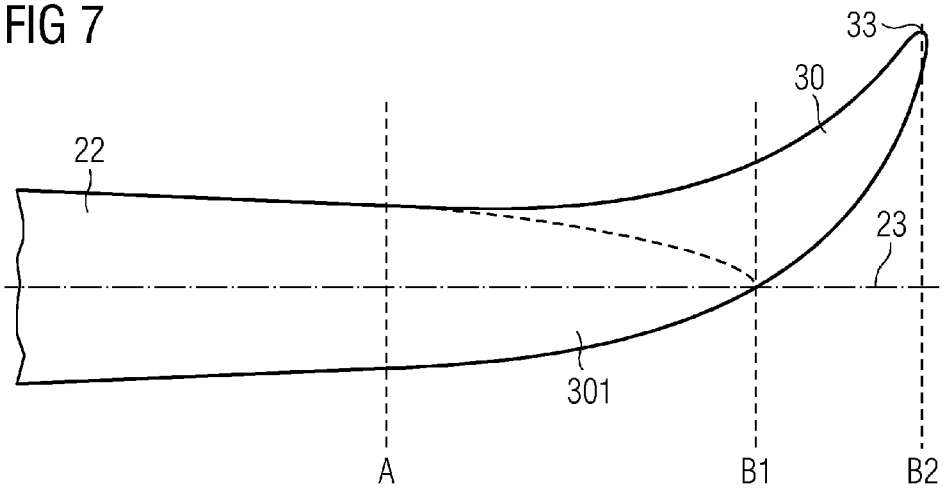

FIG 8

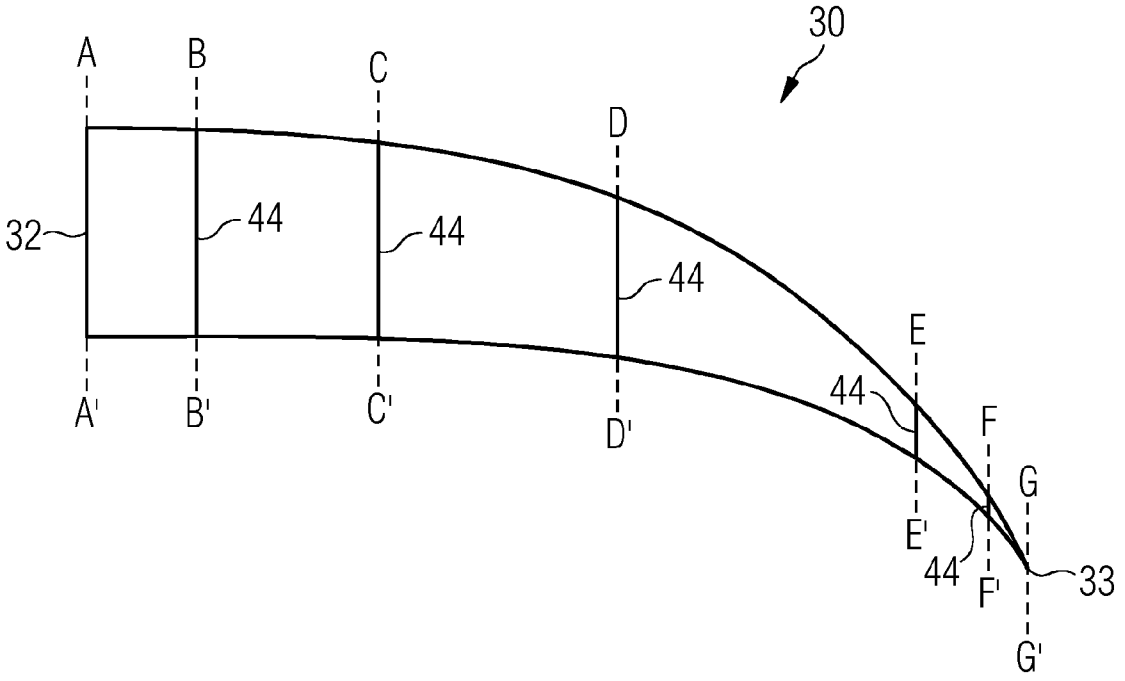

FIG 9

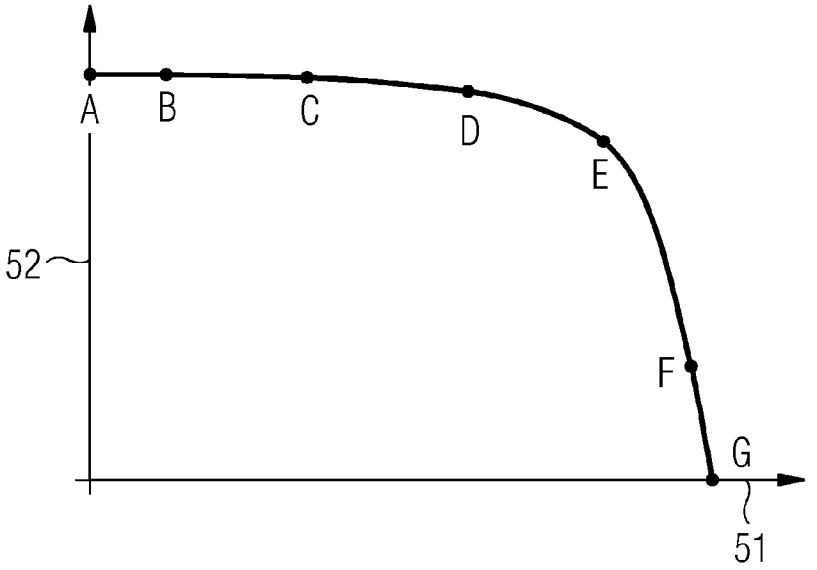

FIG 10

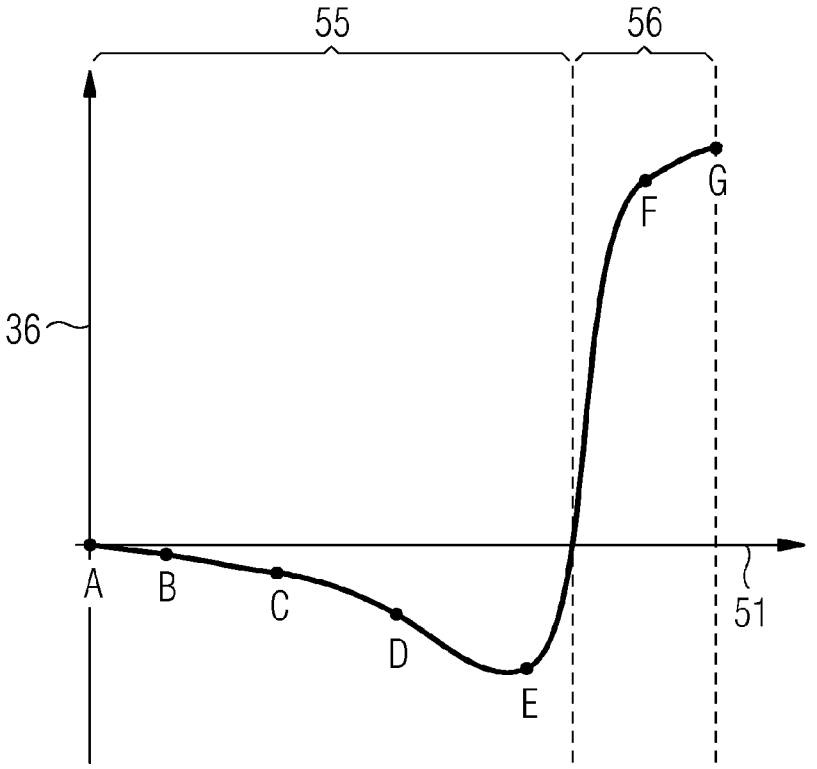

FIG 11A

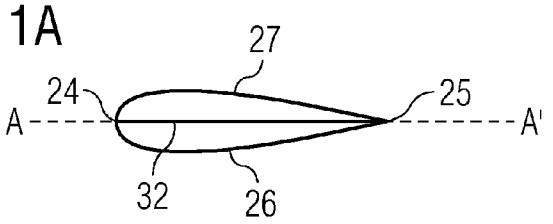

FIG 11B

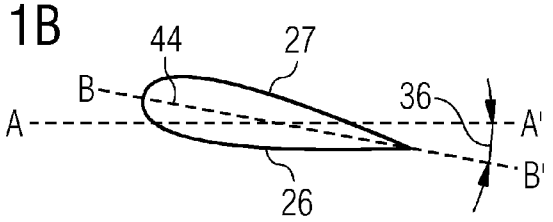

FIG 11C

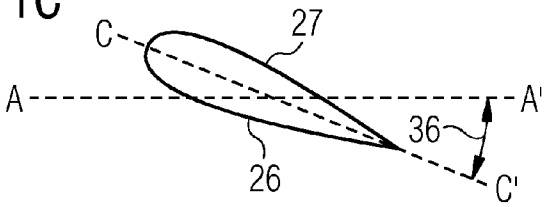

FIG 11D

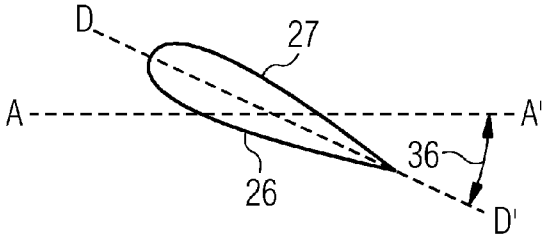

FIG 11E

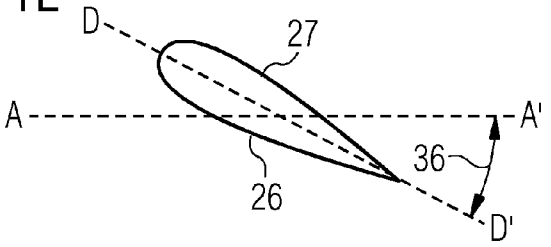

FIG 11F

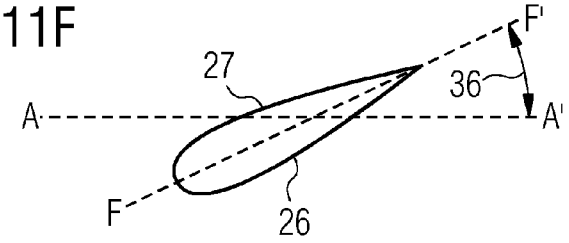

FIG 12

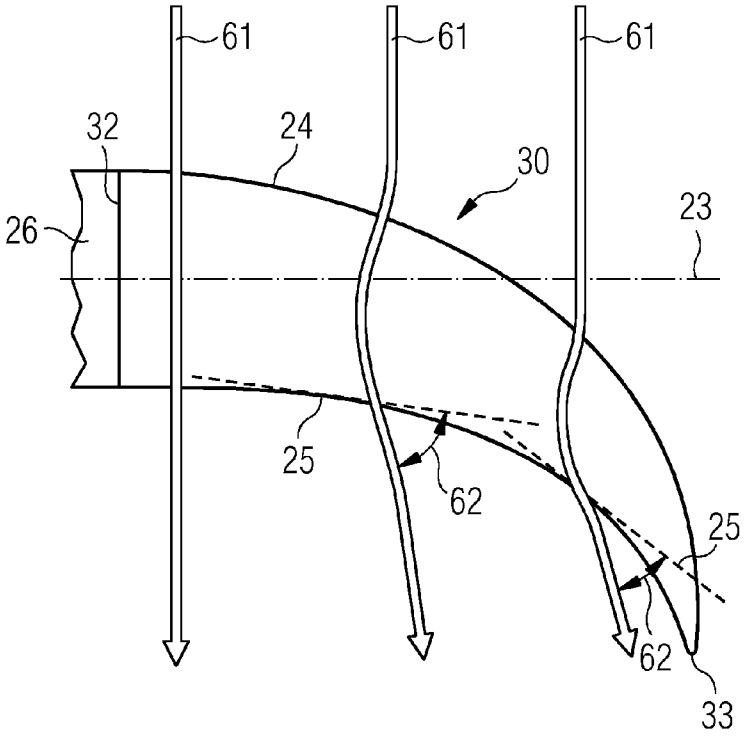

FIG 13

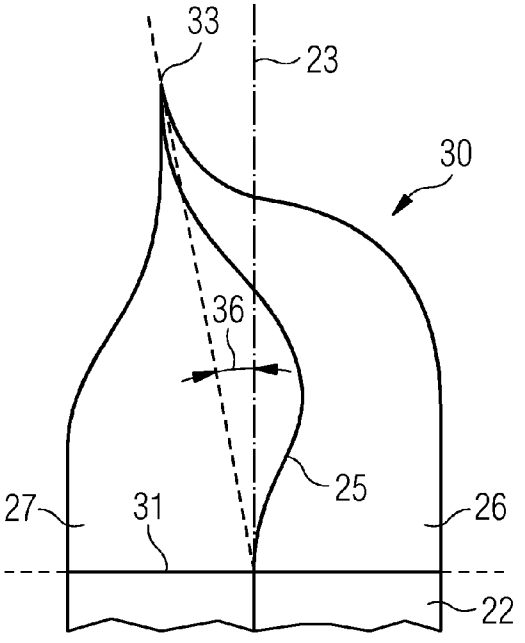

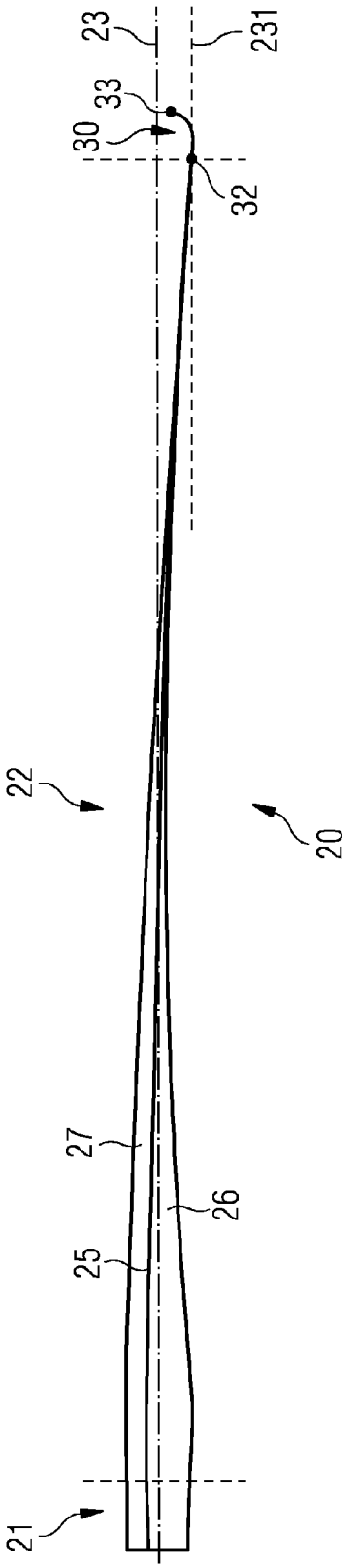

FIG 14

ROTOR BLADE OF A WIND TURBINE

FIELD OF INVENTION

[0001] The present invention relates to a rotor blade of a wind turbine. In particular, the invention relates to means for improving efficiency of a wind turbine with such a rotor blade.

BACKGROUND OF THE INVENTION

[0002] Wind turbines are a very attractive option for generating electricity. A wind turbine typically comprises one or several rotor blades, which are rotatable mounted to a hub of the wind turbine. A rotor blade in general comprises a root portion, by which the rotor blade is connected to the hub. Furthermore, a rotor blade comprises a blade body, which is also referred to as the airfoil-shaped portion of the rotor blade, and a tip portion, which is opposite to the root portion.

[0003] The tip portion of a rotor blade encounters conflicting design requirements which shall be satisfied. On the one side, the tip portion shall unload the aerodynamic loading on the rotor blade and shall provide a minimum tip vortex to reduce downwash. This requires a design that reduces the aerodynamic loading progressively along the span line of the tip portion and thereby lowers local axial induction. On the other hand, the tip portion shall produce as much power as possible and shall thus contribute to the overall purpose of a rotor blade, which is the improvement of efficiency of a wind turbine comprising this rotor blade. For the tip portion, this requires maintaining an axial induction as close as possible to the aerodynamic optimum.

[0004] Advantageously, these two design requirements are met without inducing flow separation of the airflow which would generate undesirably high levels of aerodynamic noise.

[0005] Current tip portions of rotor blades are typically designed to accomplish the first design requirement: Aerodynamic unloading with the provision of small tip vortices. This requirement may, for instance, be met by so-called winglets, which comprise a curvature of the rotor blade in the section of the tip portion out of a plane of the rotor blade. However, no satisfying solution for a design of a tip portion of a rotor blade, wherein the tip portion satisfactorily meets both design requirements mentioned above, has been presented yet.

[0006] Thus, there exists an urgent need to provide a rotor blade of a wind turbine, wherein the rotor blade comprises a tip portion and the tip portion is designed such that efficiency of a wind turbine comprising such a rotor blade is improved.

SUMMARY OF THE INVENTION

[0007] This objective is achieved by the independent claims. The dependent claims describe advantageous developments and modifications of the invention.

[0008] In accordance with the invention there is provided a rotor blade of a wind turbine wherein the rotor blade comprises a blade body extending between a root portion of the rotor blade and a tip portion of the rotor blade. The rotor blade comprises a trailing edge and a leading edge. The rotor blade is arranged and prepared for being mounted to a hub of the wind turbine and for being pitched about a pitch axis. A rotor blade plane is defined by the plane comprising the chord at the tip base and a line which is parallel to the pitch axis, wherein the tip base is the part of the rotor blade at which the tip portion joins the blade body. Furthermore, the trailing edge of the tip portion has a curved shape as projected on the rotor blade plane in a way that a trailing edge sweep angle increases from the tip base to the tip of the rotor blade. Additionally, orientation of the chords with reference to the chord at the tip base changes between the tip base and the tip in a way that a chord tilt angle changes between the tip base and the tip.

[0009] Figuratively speaking, the trailing edge of the tip portion of the rotor blade comprises a curved or swept shape as projected on the rotor blade plane and, at the same time, the chords of the tip portion of the rotor blade change their orientation with regard to the tip base chord. Thus, superimposing the curvature of the trailing edge in the rotor blade plane and the changing orientation of the chords results in a curved and twisted trailing edge between the tip base and the tip.

[0010] Rotor blades with a curved tip portion including a curved trailing edge with the curvature realized in the rotor blade plane are known to the person skilled in the art. This invention, however, discloses a tip portion, where the chords and thus the trailing edge as well are additionally twisted. By the combination of sweep and twist at the tip portion of the rotor blade the two conflicting design requirements which have been described above are successfully met. More specifically, the curved and twisted trailing edge of the tip portion involves both a lowering of the local axial induction in one segment of the tip portion, thus reducing the aerodynamic loading, and at the same time maintenance of the axial induction as close as possible to the aerodynamic optimum on a different segment of the tip portion, thus improving the power generating potential of the rotor blade.

[0011] Note that in the context of this application, a chord, which always is a straight line and which, for instance, is not curved of twisted itself, may be tilted, in other words inclined, with reference to a reference line, which may be the chord at the tip base. The result of a plurality of tilted chords comprising different chord tilt angles is a trailing edge, which is twisted, in other words bent, and which is thus referred to as a twisted trailing edge.

[0012] Additionally, note that as, for instance, the rotor blade may be curved to the suction side or to the pressure side such that the pitch axis and the chord at the tip base do not intersect and thus cannot define a plane, the rotor blade plane is defined by any line which is parallel to the pitch axis and which can validly define a plane. This is in particular the case for a line being parallel to the pitch axis which intersects the chord at the tip base.

[0013] An advantage of the disclosed rotor blade is an increased power production capability of the wind turbine where the rotor blade is attached to due to higher pressure recoveries for the rotor blade near the tip portion. Additionally, acoustic noise may be reduced due to an advantageous angle between the trailing edge and the streamline of the airflow which flows from the leading edge across the rotor blade.

[0014] Another advantage of the inventive tip portion is a reduction, or even a prevention, of flow separation, thus leading to a promotion of tip vortices which are small compared to tip vortices of a similar, conventional rotor blade.

[0015] In other words, the tip portion may be described as being raked in an edgewise direction of the rotor blade.

[0016] A span line of the rotor blade is referred to as a longitudinal axis of the rotor blade extending from the root to the tip. Compared to the pitch axis, which always is a straight line, the span line follows the actual shape of the rotor blade. This means that if e.g. the blade body comprises a slight

aft-swept, the span line is slightly aft-swept, too. The span line follows the shape of rotor blade in its tip portion likewise. Thus, a curved tip portion results in a curved span line.

[0017] At each radial position along the span line, in particular at each radial position of the blade body and of the tip portion, a chord can be assigned to the rotor blade. In the context of this application, the chord is defined as being the line connecting the trailing edge and the leading edge in a plane perpendicular to the pitch axis. This plane is also referred to as the specific cross-section profile or airfoil of the rotor blade at a radial position.

[0018] The tip base is a plane which is perpendicular to the pitch axis. The chord which is determined at the tip base is also referred to as the tip base chord.

[0019] In particular, the tip base may be understood as the plane being perpendicular to the pitch axis at the specific radial position of the pitch axis where the trailing edge starts to describe a concave curvature and/or the leading edge starts to describe a convex curvature, as viewed from the suction side of the rotor blade.

[0020] Furthermore, a reference plane can be assigned to the rotor blade. The reference plane is defined as the plane comprising the pitch axis and being perpendicular to the tip base chord.

[0021] The trailing edge sweep angle is defined as the angle between the pitch axis and the trailing edge and is determined at the tip base. As known from geometry, an angle in general is defined by a first line, a second line and an intersection of both lines, which is also referred to as the vertex. Thus, precisely speaking, the first side of the trailing edge sweep angle is the tangent of the trailing edge and the second side of the trailing edge sweep angle is a line which is parallel to the pitch axis and which intersects the intersection of the tangent of the trailing edge and the tip base. This intersection may be referred to as the vertex.

[0022] For any point along the trailing edge of the tip portion, a trailing edge sweep angle may be defined. It is one aspect of the invention that the trailing edge sweep angle increases from the tip base to the tip. In other words, the trailing edge sweep angle measured at the tip is greater than the trailing edge sweep angle measured at the tip base.

[0023] It has to be noted that the expression of the curved shape of the protection of the trailing edge of the tip portion on the rotor blade plane comprises a continuously curved shape of the trailing edge, but also a shape of the trailing edge resembling a polygon. In other words, the trailing edge of the tip portion may partially or fully be stepped or segmented.

[0024] The chord tilt angle is defined as the angle between the tip base chord and a specific chord at a specific radial position between the tip base and the tip. Mathematically speaking, the first side of the chord tilt angle is represented by the specific chord and the second line is represented by a line which is parallel to the tip base chord and intersects the specific chord.

[0025] In other words, one aspect of the invention is characterized by the fact that the orientation of the chords of the tip portion changes between the tip base and the tip, compared to the chord at the tip base.

[0026] The blade body may be substantially straight, meaning that the span line of the blade body substantially coincides with the pitch axis. However, the curved and twisted tip portion may also be combined with a blade body which itself comprises a swept or curved shape. Thus, the raked tip portion may be combined with any shape of the blade body of the rotor blade.

[0027] A wind turbine, which is also referred to as a wind power plant, is a device that converts kinetic energy from the wind into electrical energy.

[0028] The tip base is a virtual or imaginary surface or area within the rotor blade for defining the limit of the tip portion. If, as an example, the tip portion is manufactured separately with regard to the blade body, the tip base may be the real and actual area where the tip portion is connected or attached to the blade body. However, this is not necessarily the case, as the rotor blade comprising the tip portion may also be manufactured unitarily, i.e. as a single piece.

[0029] It has to be noted that the trailing edge sweep angle does not necessarily have to increase along the whole way from the tip base to the tip. However, there have to be parts or sections of the trailing edge of the tip portion, wherein the trailing edge sweep angle increases.

[0030] In an advantageous embodiment, the trailing edge sweep angle increases by at least 2 degrees, in particular by at least 5 degrees, from the tip base to the tip.

[0031] In another advantageous embodiment, the trailing edge sweep angle increases by at most 40 degrees, in particular by at most 30 degrees, from the tip base to the tip.

[0032] Note that the given values for the trailing edge sweep angle represent advantageous minimum and maximum values, respectively. These minimum and maximum trailing edge sweep angles refer to a comparison of the trailing edge sweep angle determined at the tip base with the trailing edge sweep angle determined at the tip. If, for instance, the trailing edge is curved evenly from the tip base to the tip and the trailing edge sweep angle increases by 2 degrees between the tip base and the tip, this would imply that the trailing edge sweep angle determined halfway between the tip base and the tip only increases by 1 degree compared to the tip base.

[0033] In the exemplarily case of a straight blade body, the trailing edge may be parallel to the pitch axis at the tip base. In this case, the trailing edge sweep angle is 0 degree at the tip base. Due to the curved trailing edge of the tip portion, the trailing edge sweep angle may for example be 10 degrees at the tip. Then, the trailing edge sweep angle is described as increasing by 10 degrees between the tip base and the tip. If, however, in another example the trailing edge comprises an angle of 7 degrees with the pitch axis at the tip base, which may well be the case of a swept blade body, and the trailing edge sweep angle is 10 degrees at the tip, then the trailing edge sweep angle increases by only 3 degrees between the tip base and the tip.

[0034] In other words, the advantageous minimum and maximum values of 2 degrees and 40 degrees relate to a relative increase of the trailing edge sweep angle from the tip base to the tip.

[0035] In another advantageous embodiment, the chord tilt angle varies by at least 2 degrees, in particular by at least 5 degrees, between the tip base and the tip.

[0036] In another advantageous embodiment, the chord tilt angle varies by at most 30 degrees, in particular by at most 20 degrees, between the tip base and the tip.

[0037] Similarly as for the trailing edge sweep angle, the given advantageous values of minimum and maximum chord tilt angles, respectively, refer to a relative variation of the chord tilt angle between the tip base and the tip.

[0038] It may be advantageous that the chord tilt angle features both sections with increase and sections with decrease along the pitch axis between the tip base and the tip. In particular, the tip portion may comprise a first section, where the trailing edge is twisted towards a suction of the blade body, and/or a second section, where the trailing edge is twisted towards a pressure side of the blade body. Suction and pressure side are commonly used expressions in the art of rotor blade aerodynamics.

[0039] In other words, it may be advantageous that the chords are inclined or orientated to one side in the first section, thus exhibiting negative chord tilt angles in the first section, and that they are inclined or orientated to the other side in the second section, thus exhibiting positive chord tilt angles in the second section. An inclination towards the suction side is referred to negative chord angles and an inclination towards the pressure side is referred to positive chord angles

[0040] The radial position where the chord tilt angles change from a decreasing slope to an increasing slope is also denoted as a toe.

[0041] It may be advantageous that the first section is adjacent to the tip base, while the second section is adjacent to the tip.

[0042] Figuratively speaking, coming from the tip base and heading towards the tip, in one embodiment of the invention the chords are firstly inclined towards the suction side of the blade body, reach a maximum inclination to the suction side, which is referred to as the toe, and subsequently are increasingly inclined to the pressure side of the blade body until reaching the tip with a considerable inclination towards the pressure side.

[0043] It may be advantageous that the increase of the chord tilt angle in the second section is steep compared to its decrease in the first section.

[0044] In another advantageous embodiment, the chord length decreases at a higher rate in the second section compared to the first section.

[0045] It has to be found that the combination of a relatively strong decrease of the chord length in a section close to the tip, combined with a relatively strong increase of the chord tilt angle may provide an exceptionally large improvement of the efficiency of the wind turbine and an exceptionally large reduction of the aerodynamic noise generated by the rotor blade.

[0046] In another advantageous embodiment, the projection of the leading edge of the tip portion on the rotor blade plane has a curved shape such that a leading edge sweep angle increases from the tip base to the tip.

[0047] The leading edge sweep angle is defined as the angle between the pitch axis and the leading edge and is determined at the tip base. Precisely speaking, the first side of the leading edge sweep angle is the tangent of the leading edge, and the second side of the leading edge sweep angle is a line which is parallel to the pitch axis and which intersects the intersection of the tangent of the leading edge and the tip base. This intersection may be referred to as the vertex of the leading edge angle.

[0048] Advantageously, the leading edge sweep angle increases by at least 10 degrees, in particular by at least 20 degrees, from the tip base to the tip.

[0049] In another advantageous embodiment, the leading edge sweep angle increases by at most 80 degrees, in particular by at most 60 degrees, from the tip base to the tip.

[0050] As in general the tip portion does not only comprise a trailing edge but also a leading edge, the tip portion may also be characterized by the leading edge sweep angle. The leading edge sweep angle is defined similarly to the trailing edge sweep angle. If the tip portion is curved towards the trailing edge of the blade body, the leading edge sweep angle is generally larger than the trailing edge sweep angle. If the tip portion is curved towards the leading edge of the blade body, the leading edge sweep angle is generally smaller than the trailing edge sweep angle.

[0051] Advantageously, the tip portion is curved towards the trailing edge of the blade body, which is also referred to as an aft-sweep.

[0052] A curvature towards the trailing edge of the blade body has the advantage of an advantageous angle between the streamline of an airflow which flows from the leading edge across the rotor blade and the trailing edge, which may lead to an overall reduction of aerodynamic noise, i.e. a reduction of the sound pressure level generated by the rotor blade. This is due to directivity effects.

[0053] Note that the advantageous minimum and maximum values for the leading edge sweep angles have to be understood similarly as the minimum and maximum values for the trailing edge sweep angle.

[0054] In another advantageous embodiment, the trailing edge of the tip portion, as viewed from the suction side of the rotor blade, is at least partially concavely shaped and the leading edge of the tip portion, as viewed from the suction side of the rotor blade, is at least partially convexly shaped.

[0055] In particular, the whole trailing edge of the tip portion may be concavely shaped and/or the whole leading edge of the tip portion may be convexly shaped.

[0056] In another advantageous embodiment, the projection of the trailing edge of the tip portion on the reference plane has a curved shape such that a cant angle increases from the tip base to the tip.

[0057] The cant angle is defined as the angle between the trailing edge and the line which is parallel to the pitch axis and intersects the intersection of the tangent of the trailing edge with the tip base. This intersection is referred to as the vertex of the cant angle.

[0058] Figuratively speaking, the cant angle refers to a sweep of the tip portion out of the rotor blade plane, while the trailing edge sweep angle refers to a sweep of the trailing edge within the rotor blade plane. The twist of the trailing edge, characterized by the chord tilt angle, differs from the cant of the tip portion, characterized by the cant angle, in that the twist basically relates to a displacement or off-set of solely the trailing edge, while the tip portion as a whole substantially remains in the rotor blade plane, compared to the cant, which basically relates to a displacement of off-set of the tip portion as a whole out of the rotor blade plane.

[0059] It may thus be advantageous to provide a tip portion wherein the trailing edge comprises a sweep within the rotor blade plane, characterized by the trailing edge sweep angle, a sweep out of the rotor blade plane, characterized by the cant angle, and a twist of the trailing edge, characterized by the chord tilt angle. By combining all three features, an optimal design of the tip portion can be realized.

[0060] The sweep of the tip portion which is characterized by the cant angle is also referred to as a flapwise rake of the rotor blade. Thus, in other words, an edgewise rake and a flapwise rake may be superimposed to achieve an optimum design of the tip portion.

[0061] Note that the tip portion may be bent towards the tower of the wind turbine or away from the tower, in case that the rotor blade is mounted to a wind turbine which comprises a tower.

[0062] It may be advantageous that the cant angle increases by at least 20 degrees, in particular by at least 40 degrees, from the tip base to the tip.

[0063] An advantageous maximum for the cant angle may be at 80 degrees. However, note that in principle also cant angles exceeding 80 degrees or even exceeding 90 degrees are possible.

[0064] In another advantageous embodiment, the trailing edge sweep angle and/or the cant angle increases monotonically from the tip base to the tip of the rotor blade.

[0065] In another advantageous embodiment, the leading edge sweep angle increases monotonically from the tip base to the tip of the rotor blade.

[0066] Thus, note that the sweep angles and/or the cant angle may monotonically increase in the region from the tip base to the tip. However, they do not necessarily have to exhibit this monotonic behavior. According to the specific design of the rotor blade as a whole and its designated application, a non-monotonic design of the sweep angles and/or the cant angle may be advantageous, too.

[0067] In another advantageous embodiment, at least one segment of the trailing edge of the tip portion is shaped as a straight line and/or at least one segment of the leading edge of the tip portion is shaped as a straight line.

[0068] It may for example be beneficial from a manufacturing point of view to include one or more substantially straight segments of the trailing edge or the leading edge in order to facilitate manufacturing of the tip portion. Such a segment is also referred to as a sub-segment of the trailing edge or of the leading edge, respectively.

[0069] In another advantageous embodiment, the length of the tip portion, as projected on the rotor blade plane and measured along the pitch axis, is between 0.5% and 10%, in particular between 1% and 5%, of the length of the entire rotor blade from the root to the tip as projected on the rotor blade plane and measured along the pitch axis.

[0070] In other words, the tip portion comprises the part of the rotor blade which is the outermost part in a radial direction and comprises 0.5% to 10% of the total radial length of the rotor blade. Exemplarily, the tip portion is defined as the outermost 0.5 meters to 3 meters of the rotor blade.

[0071] Note that the given relative and absolute values refer to a distance along the pitch axis which is not necessarily equal to a distance along the span line of the rotor blade.

[0072] In another advantageous embodiment, the rotor blade is shaped such that the tip is separated from a tangential plane, wherein the tangential plane is defined to be perpendicular to the pitch axis and tangential to the tip portion.

[0073] Figuratively speaking, the tangential plane is tangential to the outermost point of the rotor blade, wherein outermost is defined as furthest away from the root and measured along the pitch axis.

[0074] Particularly in a case where the tip portion is heavily curved and/or in a case where the blade body comprises a significant sweep, there may be a separation or off-set between the tip and the tangential plane. However, advantageously, this separation between the tip and the tangential plane is below 1% of the total length of the rotor blade, defined by the distance from the tip to the root along the pitch axis. In absolute values, the separation may be in a range between 1 centimeter and 100 centimeters.

[0075] It shall be noted that in the context of the whole application, the tip of the rotor blade may also be characterized as the point where the leading edge meets the trailing edge.

[0076] In another advantageous embodiment, the rotor blade deforms under wind loads such that the trailing edge sweep angle and/or the chord tilt angle and/or the cant angle changes at least about 5%, in particular about 15%, compared to an unloaded state of the rotor blade.

[0077] It shall be stressed that in the context of this application, features such as angles, dimensions or positioning relative to each other relate to a rotor blade in an unloaded state, i.e. in a state without wind loads acting on the rotor blade. These features may change if wind loads act on the rotor blade. In particular, the tip portion is susceptible to a considerable structural deformation under wind loads. Thus, the given values for the mentioned feature may change if wind loads are acting on the rotor blade.

[0078] In another advantageous embodiment, the tip portion is added to the blade body as a retrofit.

[0079] On the one hand, a retrofit refers to a part, in this case the tip portion, which is added on an existing rotor blade. For instance, a wind turbine may already be in operation and at a given moment the tip portion is added to the existing rotor blade. This may be done without disassembling the wind turbine, in particular without dismounting the rotor blade from the hub of the wind turbine. However, it may also be possible to dismount the rotor blade, attach the retrofit tip portion and subsequently remount the rotor blade to the hub of the wind turbine.

[0080] On the other hand, retrofitting shall relate to the fact that the rotor blade as such is not manufactured as a single piece but is manufactured with a conventional tip portion, or no tip portion, and subsequently the inventive tip portion is added to the blade body during the manufacturing process.

[0081] In another advantageous embodiment, the rotor blade is manufactured as a single piece, i.e. unitarily.

[0082] An advantage of manufacturing the rotor blade unitarily is a good mechanical stability at the tip base. However, it has to be kept in mind that transportation of the manufactured rotor blade has to be considered, too, which might be a challenge, in particular if the tip portion is heavily curved and/or the tip portion has a considerable extension.

[0083] Finally, in another advantageous embodiment, the trailing edge and the streamline of an airflow which flows from the leading edge across the rotor blade comprise an angle which is smaller than 80 degrees, in particular smaller than 50 degrees at the tip portion of the rotor blade.

[0084] It has been found that an angle which is smaller than 80 degrees between the trailing edge and the streamline may reduce aerodynamic noise which is generated by the rotor blade under operation. This is due to directivity effects on the sound pressure level. A separation of the airflow may also be the cause of undesired aerodynamic noise. One effect of the curved and twisted trailing edge of the tip portion is that the streamline of the airflow is guided such that the angle between the streamline and the trailing edge is reduced compared to a conventional tip portion.

BRIEF DESCRIPTION OF THE DRAWINGS

[0085] Embodiments of the invention are now described, by way of example only, with reference to the accompanying drawings, of which:

[0086] FIG. **1** shows a wind turbine;

[0087] FIG. **2** shows a rotor blade in a top view onto the rotor blade plane;

[0088] FIG. **3** shows a tip portion of a rotor blade in a top view onto the rotor blade plane;

[0089] FIG. **4** shows a rotor blade with a swept blade body in a top view onto the rotor blade plane;

[0090] FIG. **5** shows a perspective view of a rotor blade comprising a cant angle;

[0091] FIG. **6** shows a conventional tip portion and a raked tip portion of a rotor blade;

[0092] FIG. **7** shows a raked tip portion added as a retrofit to a conventional tip portion of a rotor blade;

[0093] FIG. **8** shows a tip portion of a rotor blade in a top view onto the rotor blade plane;

[0094] FIG. **9** shows the chord lengths of the tip portion shown in FIG. **8**;

[0095] FIG. **10** shows the chord tilt angles of the tip portion shown in FIG. **8**;

[0096] FIGS. **11***a-f* shows the cross-sections of the tip portion shown in FIG. **8** at specific radial positions;

[0097] FIG. **12** shows the deflection of the streamline of an airflow which flows from the leading edge across the rotor blade;

[0098] FIG. **13** shows a tip portion of a rotor blade in a top view onto the reference plane; and

[0099] FIG. **14** shows another embodiment of a rotor blade.

[0100] The illustration in the drawings is schematically. It should furthermore be noted that numerals which refer to similar features or elements are referred to with the same numeral throughout the drawings.

DETAILED DESCRIPTION

[0101] In FIG. **1**, a wind turbine **10**, erected on a ground **14**, is shown. Note that, in general, wind turbines may be installed onshore or offshore. The wind turbine **10** in FIG. **1** comprises a tower **11** and a nacelle **12**, wherein the nacelle **12** is rotatable mounted to the tower **11** by means of a yaw bearing. The wind turbine **10** furthermore comprises a hub **13**. The hub **13** is rotatable mounted to the nacelle **12** by means of a bearing. The hub **13** is connected to a rotor which, inside the nacelle **12**, is connected to a rotor part of a generator. The generator is arranged and prepared to convert rotational movement from the hub **13** into electrical energy. Three rotor blades **20** (two of them are shown in FIG. **1**) are connected to the hub **13**. The rotor blades **20** are arranged and prepared for being pitched about a respective pitch axis **23**. The pitch axis **23** coincides with a longitudinal axis of the rotor blade **20**. A control mechanism adjusts a pitch angle such that an optimum power is generated by the wind turbine **10** depending, amongst other parameters, on the actual wind speed and wind direction. In general, the wind turbine may be a direct drive wind turbine, meaning that the rotor is directly connected to the generator. Alternatively, the wind turbine may also be a geared wind turbine. In that case a gearbox may be present between the hub **13** and the generator.

[0102] FIG. **2** shows a rotor blade **20** in a top view onto a rotor blade plane and onto a suction side **22** of the rotor blade **20**. The rotor blade **20** is divided into three areas. A first area is referred to as the root portion **21** comprising a root **41**. Advantageously, the root **41** comprises a shape of a circular cylinder. The root **41** is arranged and prepared for being mounted to the hub **13** of the wind turbine **10**. A pitch axis **23** extends through the center of the circular root **41**. The extension of the root portion **47** may exemplarily comprise 5% compared to a total extension **46** of the rotor blade **20** from the root **41** to a tip **33** of the rotor blade **20**.

[0103] Adjacent to the root portion **21** is the blade body **22** of the rotor blade **20**. The blade body **22** is also referred to as an airfoil section of the rotor blade **20**. The blade body **22** is configured such that it is mainly based on aerodynamical considerations. Compared to the blade body **22**, the design of the root portion **21** is mainly driven by structural considerations. The blade body **22** comprises a leading edge **24** and a trailing edge **25**. The leading edge **24** may, for instance, comprise a substantially cylindrical shape, while the trailing edge **25** may, for instance, have a substantially sharp edge. A chord is defined at each radial position of the rotor blade **20** as the shortest straight line between the leading edge **24** and the trailing edge **25**. A span line or centerline may be defined as halfway between the leading edge **24** and the trailing edge **25**.

[0104] The area of the blade body **22**, where the chord is maximum, is referred to as the shoulder **42** of the rotor blade **20**. Furthermore, a suction side **26** and a pressure side **27** are assigned to the rotor blade **20**.

[0105] The third area of the rotor blade **20** is referred to as the tip portion **30** of the rotor blade **20**. The tip portion **30** joins the blade body **22** at the tip base **31**. Note that in general the tip base **31** is an imaginary or virtual area of the rotor blade **20**. In particular, the tip base **31** may also be understood as the plane being perpendicular to the pitch axis **23** at the specific radial position of the pitch axis **23** where the trailing edge **25** starts to describe a concave curvature and/or the leading edge starts to describe a convex curvature, as viewed from the suction side **24** of the rotor blade **20**. The chord at the tip base **31** is referred to as the tip base chord **32**.

[0106] To give an idea of the respective dimensions of a rotor blade, an exemplary rotor blade **20** may have a total length **46** characterized by the distance between the root **41** and the tip **33** of 70 m (meters), while the root portion **21** only measures 2 m and the tip portion **30** measures 3 m, the latter characterized by the distance **45** between the tip **33** and the tip base **31**.

[0107] FIG. **3** shows a tip portion **30** of a rotor blade **20** in a top view onto the rotor blade plane and onto a suction side **22** of the rotor blade **20**. The rotor blade **20** comprises a straight blade body **22** and the pitch axis **23** intersects the tip base chord **32** halfway. Note that the span line **43** of the rotor blade **20** comprises a curved shape in the region of the tip portion **30**, following the shape of the tip portion **30**. The tip base **31** comprises the cross-section of the rotor blade **20** at the specific radial position where the tip portion **30** joins the blade body **22**.

[0108] The tip portion **30** comprises a leading edge **24** and a trailing edge **25**. Furthermore, it comprises a tip **33** which is slightly separated from a tangential plane **29** which is defined to be the plane which is perpendicular to the pitch axis **23** and tangential to the tip portion **30**. Exemplarily, the distance between the tip base **31** and the tangential plane **29** is 2.5 m, while the distance between the tangential plane **29** and the tip **33** is 1.5 cm. A trailing edge sweep angle **34** determined at the tip base **31** can be given for every point on the trailing edge **25** of the tip portion **30**. The trailing edge sweep angle **34** com-

prises 0 degree at the tip base **31**, as it is just measured at the tip base **31**. It increases monotonically until the tip **33**. The trailing edge sweep angle **34** at the tip **33** comprises exemplarily 20 degrees.

[0109] The leading edge sweep angle **35** is determined likewise. Again, the leading edge sweep angle **35** at the tip base is 0 degree while the leading edge sweep angle **35** at the tip **33** is 36 degrees. Note that the leading edge sweep angle **35** increases monotonically from the tip base **31** to the tangential plane **29** and slightly decreases between the tangential plane **29** and the tip **33**.

[0110] In FIG. **4**, a rotor blade **20** with a swept blade body **22** in a top view onto the rotor blade plane and onto a suction side **22** of the rotor blade **20** is shown. Similar to a rotor blade with a straight blade body, the rotor blade **20** with a swept blade body **22** can be divided into a root portion **21**, the blade body **22** and a tip portion **30**. In FIG. **4**, both a conventional tip portion **301** and a tip portion **30** according to one embodiment of the invention are illustrated. The trailing edge sweep angle **341** at the tip base **31** comprises 35 degrees and the trailing edge sweep angle **34** at the tip **33** comprises 60 degrees. Thus, the trailing edge sweep angle **34** increases by 25 degrees between the tip base **31** and the tip **33**. Likewise, the leading edge sweep angle increases as well between the tip base **31** and the tip **33** which for sake of clarity is not shown in FIG. **4**.

[0111] FIG. **5** shows a rotor blade **20** comprising a cant angle **37** in a perspective view. The rotor blade **20** can be viewed from the leading edge **24**. The tip base is defined by the plane which comprises the lines I-I', II-II' and the tip base chord **32**. FIG. **5** shows an advantageous embodiment of the invention of a rotor blade **20** with a tip portion **30** which comprises a cant angle **37** of approximately 50 degrees. In other words, the tip portion **30** is curved out of the rotor blade plane, in the example of FIG. **5** towards the pressure side **27** of the rotor blade **20**.

[0112] It has to be noted that the tip portion **30** additionally comprises a trailing edge which is curved towards the trailing edge of the blade body **22** and a trailing edge of the tip portion **30** that is twisted. However, the curvature of the trailing edge of the tip portion **30** and the twist of the trailing edge of the tip portion **30** is not visible in the perspective view of FIG. **6**. A tip portion with a cant angle **37** is also referred to as a winglet. An advantage of a tip portion **30** with such a cant angle **37** is a further improvement of the efficiency and a further noise reduction of the rotor blade **20** compared to a rotor blade without a winglet.

[0113] FIGS. **6** and **7** show two comparisons of exemplary raked tip portions **30** according to the invention and conventional tip portions **301**.

[0114] In FIG. **6**, the raked tip portion **30** comprises a similar length as the conventional tip portion **301**, wherein the length is defined as the distance between a first imaginary line A, which can be identified with the tip base, and a second imaginary line B, which is the projection of the tip **33** onto the pitch axis **23**.

[0115] In FIG. **7**, the raked tip portion **30** represents an extension or an add-on to the conventional tip portion **301**. While the length of the conventional tip portion **301** extends from the imaginary line A to the imaginary line B**1** and is similar to the length of the conventional tip portion **301** of FIG. **6**, the length of the raked tip portion **30** in FIG. **8** extends from line A to line B**2** and thus is greater than the length of the conventional tip portion **301**. An embodiment as represented in FIG. **7** may advantageously be used when retrofitting an existing rotor blade.

[0116] FIG. **8** shows a tip portion **30** of a rotor blade in a top view onto the rotor blade plane. Chords **44** at the specific radial positions A-A', B-B', C-C', D-D', E-E' and F-F' are shown. The chord at the position A-A' is also referred to as the tip base chord **32**. At the tip **33**, the chord length approaches zero, thus no chord can be shown.

[0117] FIGS. **9** and **10** show the radial chord length **52** and the radial chord tilt angle **36** of the rotor blade shown in FIG. **8**.

[0118] Specifically, FIG. **9** shows the chord length **52** with regard to a radial distance from the root of the rotor blade. It can be seen that the chord length **52** slightly decreases in the radial positions between A and E. Between the radial positions E and G, the chord length **52** decreases significantly more.

[0119] As can be seen in FIG. **10**, the significant decrease of the chord length between the radial positions E and G is accompanied by a sharp increase of the chord tilt angle **36** in this radial section. Note that the radial position E, where the slope of the chord tilt angle **36** equals zero, is denoted also as toe.

[0120] FIGS. **11***a* to **11***f* show the airfoil profiles, i.e. the cross-sections perpendicular to the pitch axis, at the radial positions A to F. The cross-section of the radial position G is not shown as the chord length at the radial position G approaches zero. The dimensions of the cross-sections in FIGS. **11***a* to **11***f* are normalized to the cross-section at the tip base, i.e. at the radial position A.

[0121] In FIG. **11***a*, no chord tilt angle is shown, as it equals zero at the tip base. For radial positions extending away from the tip base and towards the tip, the chord tilt angle increases, as it is shown for the section between the radial position A and the radial position E in FIG. **10**. Additionally, the chord tilt angle **36** is negative in this section, which corresponds to an inclination of the chords **44** towards a suction side **26** of the blade body, as can be seen in FIGS. **11***b* to **11***e*. At the radial position E, i.e. the toe, the inclination of the chord **44** towards the suction side **26** is maximal. Going further towards the tip, the inclination first decreases and subsequently flips to the pressure side **27** of the blade body. It can be seen in FIG. **11***f* that the inclination of the chord **44** at the radial position F is considerable. In particular, an angle of attack for a designed rotor speed of zero degree may be realized at the radial position F.

[0122] FIG. **12** shows a tip portion **30** of a rotor blade **20** with a raked tip portion **30**, wherein the tip portion **30** is curved towards the trailing edge **25** of the blade body **22**. It can be seen how the streamlines **61** of an airflow which flows from the leading edge **24** across the rotor blade is deflected by the tip portion **30**. In a region close to the tip base, where the leading edge **24** and the trailing edge **25** are substantially perpendicular to the streamline **61**, the streamline **61** is hardly deflected by the rotor blade **20**. However, due to the curvature of the tip portion **30**, a deflection of the streamlines **61** is visible. Thus, there results an angle **62** between the trailing edge **25** and the streamline **61** which is smaller than 90 degrees. It can also be seen that the angle **62** is different at different positions along the trailing edge **25** of tip portion **30**. A consequence of the reduced angle **62** is a reduction of aerodynamic noise generated by the rotor blade **20**.

[0123] In FIG. **13**, another way of illustrating the twist of the trailing edge **25** is shown. More specifically, a top view of the tip portion **30** onto the reference plane is shown, wherein the reference plane is defined as the plane comprising the pitch axis **23** and being perpendicular to the tip base chord. In other words, FIG. **13** shows a top view onto the trailing edge **25**. If the trailing edge **25** were not twisted at all, the trailing edge **25** would just be a straight line if projected onto the reference plane. In FIG. **13**, however, the trailing edge **25** is twisted which is manifested by the curved line of the trailing edge **25**. It can be seen that in the example shown in FIG. **13**, the trailing edge **25** is first twisted towards the suction side **26**, before being twisted towards the pressure side **27**. Note that no chords are shown in FIG. **13** as chords extend into, or out of, the plane which is illustrated in FIG. **13**.

[0124] Finally, FIG. **14** illustrates the definition of the rotor blade plane by showing an exemplary rotor blade **20**, where the blade body **22** is curved towards the suction side **26**. As the pitch axis **23** and the tip base chord **32** do not intersect, the rotor blade plane is defined by the line **231**, which is parallel to the pitch axis **23**, and the tip base chord **32**. The line **231** intersects the tip base chord **32**. Note that in the example of FIG. **14**, the tip **33** of the rotor blade **20** is swept out of the rotor blade plane, thus comprising a cant angle.

1. A rotor blade of a wind turbine, comprising

a blade body extending between a root portion of the rotor blade and a tip portion of the rotor blade, a trailing edge and a leading edge,

wherein the rotor blade is arranged and prepared for being mounted to a hub of the wind turbine and for being pitched about a pitch axis, and

wherein a rotor blade plane is defined by the plane comprising the chord at the tip base and a line which is parallel to the pitch axis, wherein the tip base is the part of the rotor blade at which the tip portion joins the blade body,

wherein the trailing edge of the tip portion has a curved shape as projected on the rotor blade plane such that a trailing edge sweep angle increases from the tip base to the tip of the rotor blade, and

wherein orientation of the chords with reference to the chord at the tip base changes between the tip base and the tip such that a chord tilt angle changes between the tip base and the tip.

2. The rotor blade according to claim **1**, wherein the trailing edge sweep angle increases by at least 2 degrees from the tip base to the tip.

3. The rotor blade according to claim **1**, wherein the trailing edge sweep angle increases by at most 40 degrees from the tip base to the tip.

4. The rotor blade according to claim **1**, wherein the chord tilt angle varies by at least 2 degrees between the tip base and the tip.

5. The rotor blade according to claim **1**, wherein the chord tilt angle varies by at most 30 degrees between the tip base and the tip.

6. The rotor blade according to claim **1**, wherein

in a first section of the tip portion the trailing edge is twisted towards the suction side of the blade body, thus leading to negative chord tilt angles and/or

in a second section of the tip portion the trailing edge is twisted towards the pressure side of the blade body, thus leading to positive chord tilt angles.

7. The rotor blade according to claim **6**, wherein the first section is adjacent to the tip base and the second section is adjacent to the tip.

8. The rotor blade according to claim **6**, wherein the rate of decrease of the chord length of the tip portion is greater in the second section than in the first section.

9. The rotor blade according to claim **1**, wherein the leading edge of the tip portion has a curved shape as projected on the rotor blade plane such that a leading edge sweep angle increases from the tip base to the tip.

10. The rotor blade according to claim **9**, wherein the leading edge sweep angle increases by at least 10 degrees from the tip base to the tip.

11. The rotor blade according to claim **9**, wherein the leading edge sweep angle increases by at most 80 degrees, in particular by at most 60 degrees, from the tip base to the tip.

12. The rotor blade according to claim **1**, wherein the tip portion is curved towards the trailing edge of the blade body.

13. The rotor blade according to claim **1**, wherein, as viewed from the suction side of the rotor blade,

the trailing edge of the tip portion is concavely shaped and the leading edge of the tip portion is convexly shaped.

14. The rotor blade according to claim **1**, wherein the trailing edge of the tip portion as projected on a reference plane, wherein the reference plane is defined as the plane comprising the pitch axis and being perpendicular to the chord at the tip base, has a curved shape such that a cant angle increases from the tip base to the tip.

15. The rotor blade according to claim **14**, wherein the cant angle increases by at least 20 degrees from the tip base to the tip.

16. The rotor blade according to claim **14**, wherein the trailing edge sweep angle and/or the cant angle increases monotonically from the tip base to the tip.

17. The rotor blade according to claim **1**, wherein

at least one segment of the trailing edge of the tip portion is shaped as a straight line and/or

at least one segment of the leading edge of the tip portion is shaped as a straight line.

18. The rotor blade according to claim **1**, wherein the length of the tip portion, as projected on the rotor blade plane and measured along the pitch axis, is between 0.5% and 10%, of the length of the entire rotor blade as projected on the rotor blade plane and measured along the pitch axis.

19. The rotor blade according to claim **1**, wherein the rotor blade is shaped such that the tip is separated from a tangential plane which is defined to be perpendicular to the pitch axis and tangential to the tip portion.

20. The rotor blade according to claim **14**, wherein the rotor blade deforms under wind loads such that the trailing edge sweep angle and/or the chord tilt angle and/or the cant angle changes at least about 5% compared to an unloaded state of the rotor blade.

21. The rotor blade according to claim **1**,

wherein the tip portion is added to the blade body as a retrofit.

22. The rotor blade according to claim **1**, wherein the rotor blade is manufactured as a single piece.

23. The rotor blade according to claim **1**, wherein the trailing edge and the streamline of an airflow which flows from the leading edge across the rotor blade comprise an angle which is smaller than 80 degrees at the tip portion.

* * * * *