Dec. 31, 1963 G. V. MOMMSEN 3,115,825

ERADICATOR ATTACHMENT FOR MARKING STAMPS

Filed July 18, 1962

FIG. 1

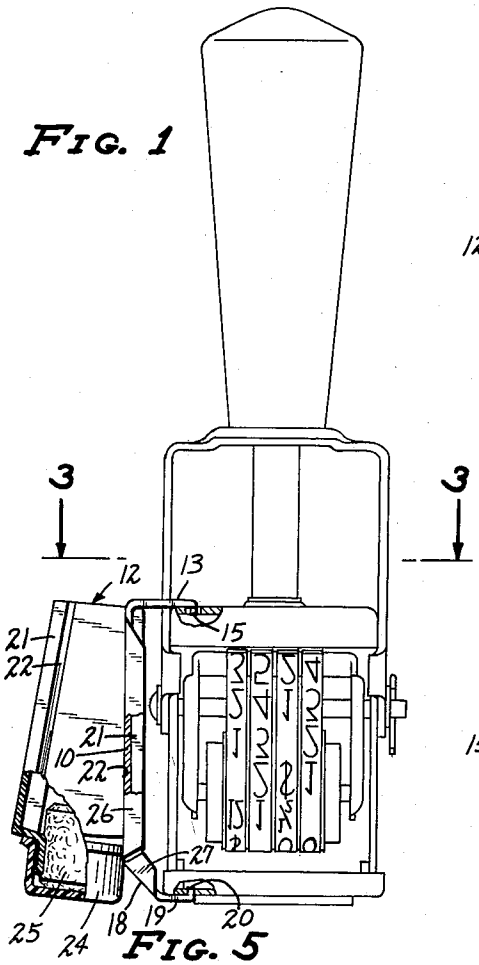

FIG. 2

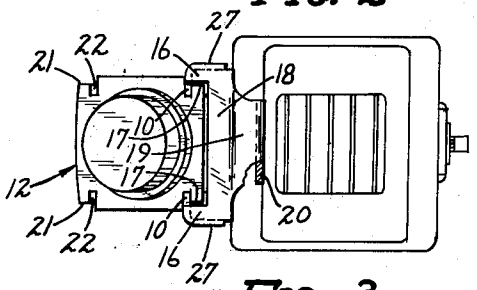

FIG. 3

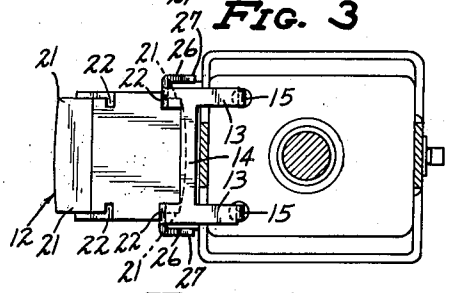

FIG. 4

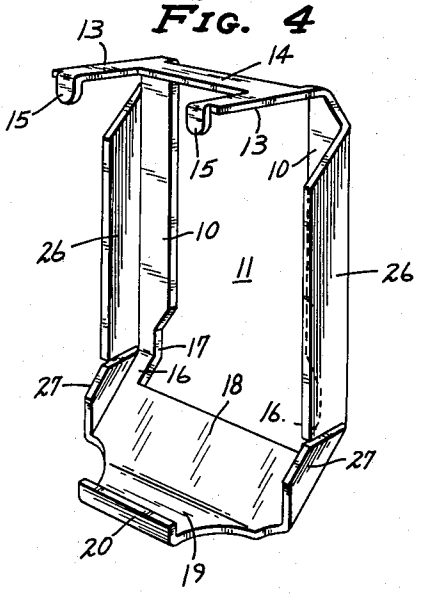

FIG. 5

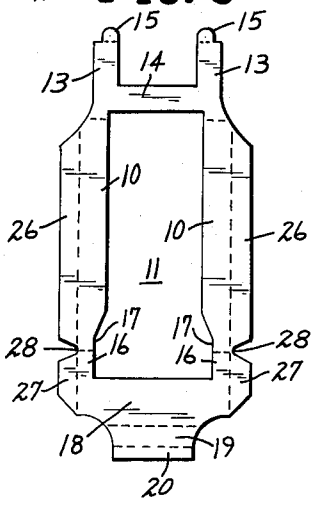

INVENTOR.
GORDON V. MOMMSEN
BY
Merchant, Merchant & Gould
ATTORNEYS

United States Patent Office

3,115,825

Patented Dec. 31, 1963

3,115,825
ERADICATOR ATTACHMENT FOR MARKING STAMPS

Gordon V. Mommsen, Minneapolis, Minn., assignor to Great West Super Markets, Inc., Wayzata, Minn., a corporation of Minnesota

Filed July 18, 1962, Ser. No. 210,708
5 Claims. (Cl. 101—1)

This invention relates to an eradicator attachment for hand-held marking stamps.

More particularly, this invention relates to the combination of a bracket and a container for holding eradicator solvent which is conveniently attached to conventional marking stamps, especially the type known to the art as a Garvey marking stamp. The invention also relates to the bracket itself.

Not infrequently, when one is actively using a hand-held marking stamp, it is necessary to eradicate promptly hand-stamped digits, letters, words or the like. Heretofore, the act of eradicating involved a time-consuming operation requiring the operator to set down the stamp and then to pick up the eradicator means. In order to cut down this time-consuming delay and improve the efficiency of eradication during a stamping operation, there is provided by the present invention a special bracket-eradicator container combination which is conveniently clipped to a conventional hand-held marking stamp, thereby making it possible to eradicate without the stamp ever leaving the hand of the operator.

It is an object of this invention to provide a source of eradicator fluid attached to a hand-marking stamp.

It is another object of this invention to provide a method of eradicating stamp ink which involves applying eradicator fluid directly to the ink to be eradicated from an applicator container associated with a hand-marking stamp.

It is still another object of this invention to provide a simple bracket suitable for attaching to a marking stamp a container for applying eradicator fluid to marking ink to be eradicated.

Other objects will become apparent to those skilled in the art upon reading this specification.

The invention is better understood by reference to the attached drawings, in which:

FIG. 1 is a side elevation showing the bracket-container combination of this invention mounted upon the side of a conventional hand-held marking stamp;

FIG. 2 is a view in bottom plan of the assembly of FIG. 1;

FIG. 3 is a horizontal sectional view taken along the line 3—3 of FIG. 1;

FIG. 4 is a perspective view of the bracket employed in FIG. 1 to hold the container of eradicator fluid upon the side of the hand stamp;

FIG. 5 shows the blank used to make the bracket shown in FIG. 4.

Referring to FIG. 4, there is seen a bracket which contains a pair of laterally spaced, generally vertically disposed leg members 10. These leg members are in a common plane and define between them a container receiving opening 11. The upper ends 13 of such leg members 10 are bent inwards to provide a pair of generally horizontally disposed support elements. A first transverse connecting element 14 extends between the inside edges of said upper leg end members 13. The free ends of such leg members 13 have downturned ears 15 to provide connection means to a hand stamp frame (see FIG. 1). The lower ends 16 of such leg members 10 are angularly displaced inwardly and formed to provide a container receiving mouth region 17 of greater width than said container receiver opening 11. Extending between opposing sides of said angularly disposed lower ends 16 is a second transverse connecting element 18.

The second transverse connecting element has attached to end, in effect, bent inwards from its bottom mid-region a generally horizontally disposed anchoring flange 19. This flange has an upturned lug 20 on its free end. Lug 20 serves to engage a portion of a hand-stamp frame, in the manner shown ni FIG. 1.

As can be seen in FIGS. 2 and 3, a container 12 suitable for holding liquid useful in ink eradication, for use in combination with the bracket shown in FIG. 4, has a generally square configuration when viewed from an end. The sides are, however, generally somewhat tapered so that a cross-section through the bottom region of the bottle has a generally smaller area than a cross-section through the top region of the same bottle. Such a container or bottle construction causes the bottle, when mounted upon a hand stamp, to have a somewhat canted orientation, as shown in FIG. 1. Such canting facilitates the application of eradicator to the locus bearing stamp marking to be eradicated.

Opposite side walls of this container 12 are provided at their corners with longitudinally running, rectangularly sided grooved regions 21. At the inside corner of each such region 21 is provided at least one channel 22. At least alternate pairs of these channels oppose one another and are dimensioned for the reception of vertically disposed leg members 10. There is preferably frictional engagement of the container 12 with the bracket 23.

The container 12 is preferably fitted with threads on the outside of the neck region adjacent the mouth, so that a screw cap 24 can be used to seal the end of the eradicator container 12. Across the mouth of the container itself is preferably placed a sponge-like or rubber material which serves as a pad 25 through which eradicator fluid may slowly seep, as when the bottle mouth with the pad 25 is pressed against a surface bearing stamped digits or letters to be eradicated.

The first mentioned transverse connecting element 14, together with portions of each upper leg end member 13 adjacent element 14, provide a stop means limiting movement of said container in one direction parallel to vertically disposed leg members 10 after said container is seated in opening 11, in the manner shown, for example, in FIGS. 1 and 3.

Optionally, a pair of parallel rigidifying side flaps 26 are formed in the bracket of FIG. 4 by an inwards bent extension of the vertically displaced leg members 10. Also optionally, a pair of parallel rigidifying side flaps 27 are formed adjacent the second transverse connecting element 18 in the region of the angular disposition of legs 16. A notch 28 is provided in the blank to compensate for the angular disposition (see FIG. 5).

In use, the bracket 23 is clamped upon the side of a hand stamp, and the container 12 is slipped into position in the manner shown in FIGS. 1, 2 and 3. When not in use, the cap 24 on the container is simply left in place, but when a stamping operation is begun the cap is conveniently removed so as to keep the eradicator fluid ready for use at any time during the stamping operation.

The bracket can be composed of any suitable resilient plastic or metallic material, but metals are preferred materials of construction. Similarly, the container can be composed of any suitable plastic or glass composition, although a plastic such as polyethylene is generally preferred, since such a container is unbreakable and can be frictionally engaged with the legs 10 in a generally more secure manner than can be achieved with glass bottles.

When the bracket is made of plastic, it is possible to mold the bracket directly from raw material in the form

shown in FIG. 4. However, with certain plastics and with most metals, it is necessary first to make a blank from sheet material and then to bend the blank into the configuration shown in FIG. 4. A blank suitable for producing the bracket assembly of FIG. 4 is shown in FIG. 5. Folds or bends are indicated by dotted lines in FIG. 5; the numerals refer to the parts in the completed bracket of the other figures in the drawings.

Although the foregoing description and drawings have been in reference to a particular embodiment of the invention, particularly as regards the bracket, it will be appreciated by those skilled in the art that modifications of the bracket structure are possible without deviating from the spirit and scope of this invention.

The claims are:

1. A bracket formed of resilient sheet material and comprising:

(*a*) a pair of laterally displaced, generally vertically disposed leg members in a common plane defining therebetween a container receiving opening,

(*b*) the upper ends of such leg members being bent inwards to provide a pair of generally horizontally disposed support elements having a first transverse connecting element therebetween and further having downturned ears on their free ends to provide connection means to a head stamp frame,

(*c*) the lower ends of such leg members being angularly displaced inwardly and formed to provide a container receiving mouth of greater width than said container receiving opening, said lower ends having a second transverse connecting element therebetween, said second transverse connecting element having a generally horizontally disposed anchoring flange in its mid-region, said flange having an upturned lug on its free end for engagement with a hand stamp frame.

2. A bracket formed of resilient sheet material and comprising:

(*a*) a pair of laterally displaced, generally vertically disposed leg members in a common plane defining therebetween a container receiving opening, each such leg member having on its outer edge a rigidifying side flap formed as an inwards bent extension of each such leg member,

(*b*) the upper ends of such leg members being bent inwards to provide a pair of generally horizontally disposed support elements having a first transverse connecting element therebetween and further having downturned ears on their free ends to provide connection means to a hand stamp frame,

(*c*) the lower ends of such leg members being angularly displaced inwardly and formed to provide a container receiving mouth of greater width than said container receiving opening, said lower ends having a second transverse connecting element therebetween, said second transverse connecting element having a generally horizontally disposed anchoring flange in its mid-region, said flange having an upturned lug on its free end for engagement with a hand stamp frame.

3. In combination, the bracket of claim 1 and a container suitable for holding liquid, said container having opposite side walls with longitudinally running rectangularly shaped grooved corners, the inside corner of each groove having at least one channel, so as to form at least two pairs of opposing channels for reception of said vertically disposed leg members, the first transverse connecting element of the bracket providing stop means for limiting movement of said container in one direction parallel to the vertically disposed leg members of the bracket.

4. In combination, the bracket of claim 2 and a container suitable for holding liquid, said container having opposite side walls with longitudinally running rectangularly shaped grooved corners, the inside corner of each groove having at least one channel, so as to form at least two pairs of opposing channels for reception of said vertically disposed leg members, the first transverse connecting element of the bracket providing stop means for limiting movement of said container in one direction parallel to the vertically disposed leg members of the bracket.

5. A bracket formed of resilient sheet material and comprising:

(*a*) a pair of laterally displaced, generally vertically disposed leg members in a common plane defining therebetween a container receiving opening,

(*b*) the upper ends of such leg members being bent inwards to provide a pair of generally horizontally disposed support elements having connecting means for associating such upper ends to a hand stamp frame,

(*c*) the lower ends of such leg members being angularly displaced inwardly and formed to provide a container receiving mouth of greater width than said container receiving opening, said lower ends being provided with connecting means for associating such lower ends to a hand stamp frame.

References Cited in the file of this patent

UNITED STATES PATENTS

795,704	Jones	July 25, 1905
1,235,424	Boyles	July 31, 1917
1,915,671	Hyer	June 27, 1933
2,388,944	Arnmon	Nov. 13, 1945
2,699,110	Clark	Jan. 11, 1955
2,753,054	Becher	July 3, 1956