Jan. 5, 1965 J. T. McNANEY 3,164,837

ELECTROSTATIC PRINTING SYSTEM UTILIZING ILLUMINATED PHOTOCONDUCTIVE MATERIAL

Filed April 22, 1960 5 Sheets-Sheet 1

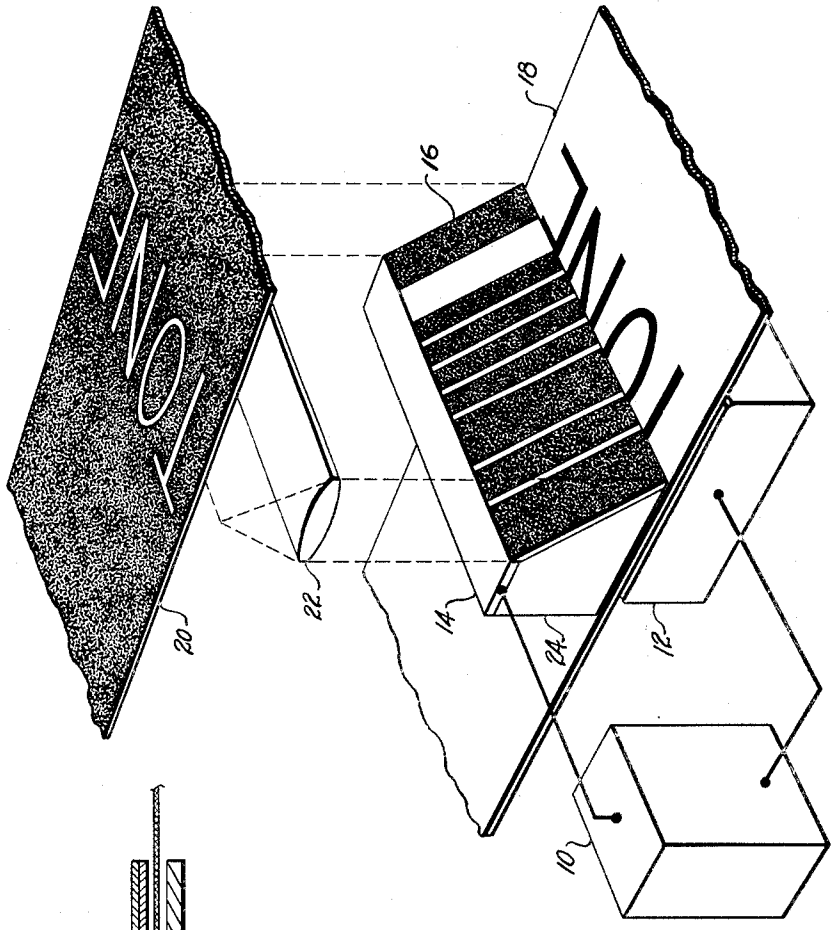

Fig. 1

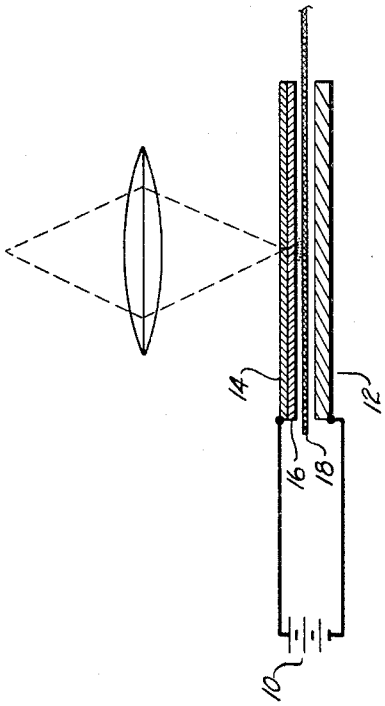

Fig. 2

JOSEPH T. McNANEY
INVENTOR.

BY Sidney Magnes

Jan. 5, 1965 J. T. McNANEY 3,164,837

ELECTROSTATIC PRINTING SYSTEM UTILIZING ILLUMINATED PHOTOCONDUCTIVE MATERIAL

Filed April 22, 1960 5 Sheets-Sheet 2

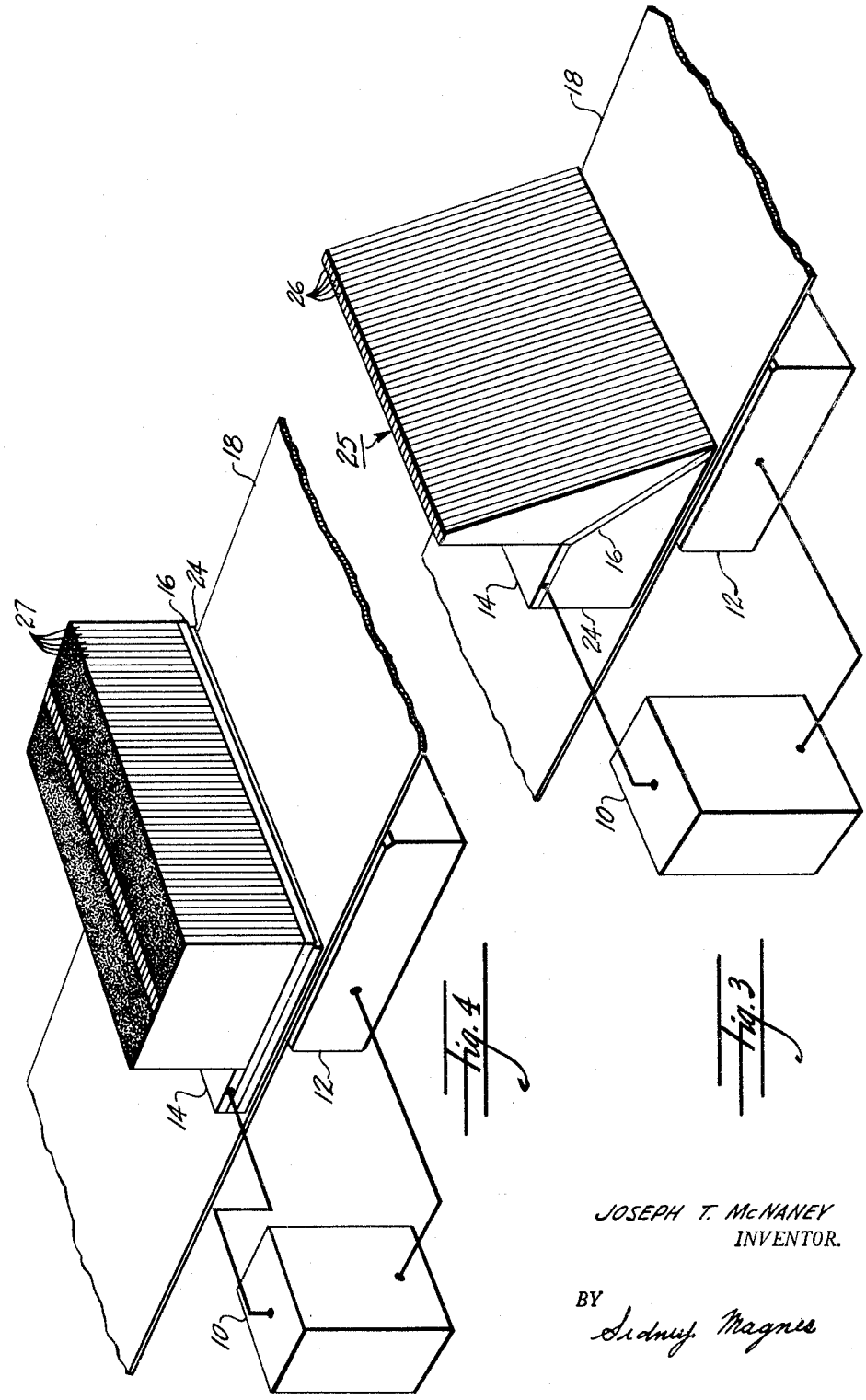

Fig. 4

Fig. 3

JOSEPH T. McNANEY
INVENTOR.

BY Sidney Magnes

Jan. 5, 1965 J. T. McNANEY 3,164,837

ELECTROSTATIC PRINTING SYSTEM UTILIZING ILLUMINATED PHOTOCONDUCTIVE MATERIAL

Filed April 22, 1960 5 Sheets-Sheet 3

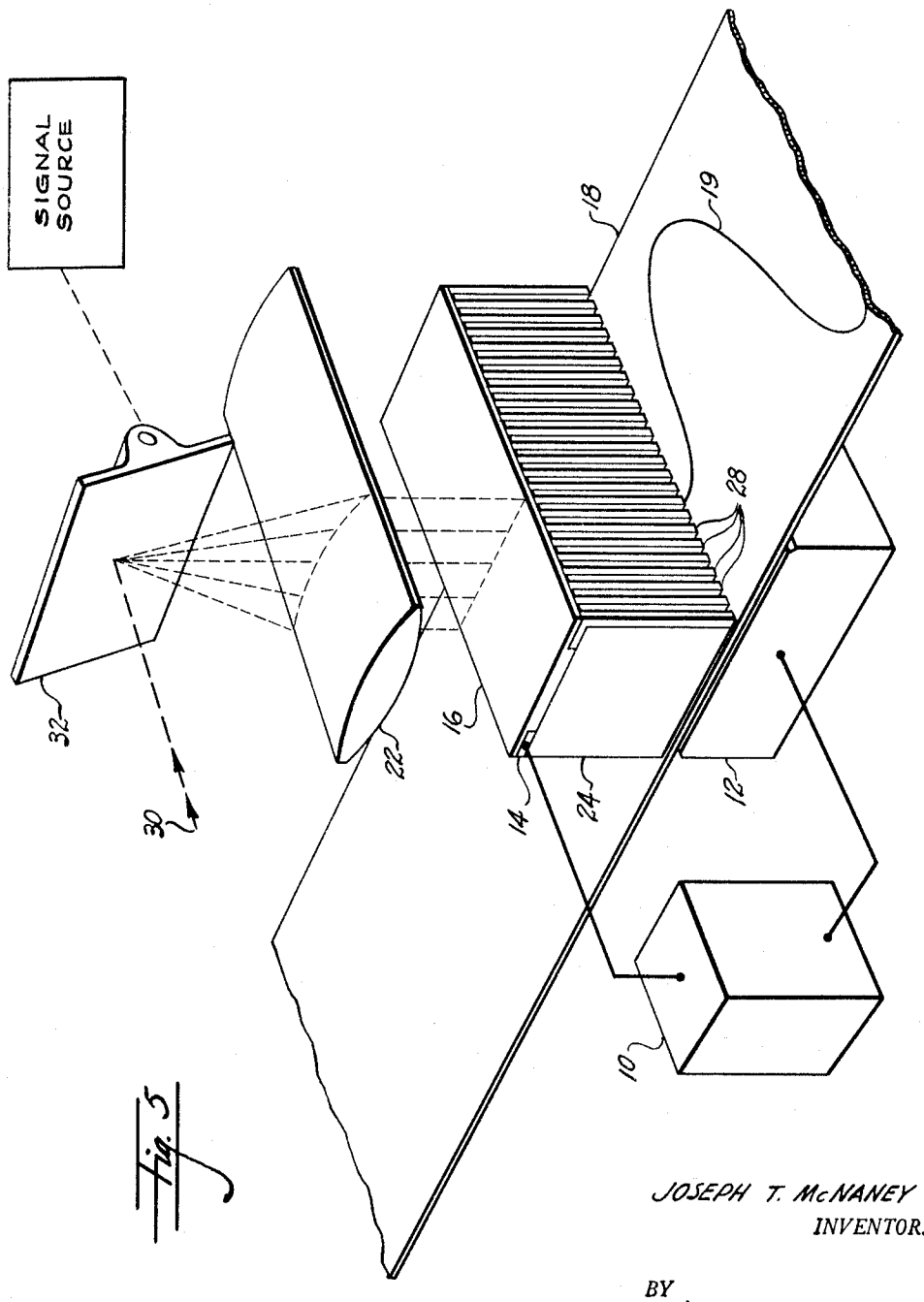

Fig. 5

JOSEPH T. McNANEY
INVENTOR.

BY
Sidney Magnes

Jan. 5, 1965 J. T. McNANEY 3,164,837

ELECTROSTATIC PRINTING SYSTEM UTILIZING ILLUMINATED PHOTOCONDUCTIVE MATERIAL

Filed April 22, 1960 5 Sheets-Sheet 4

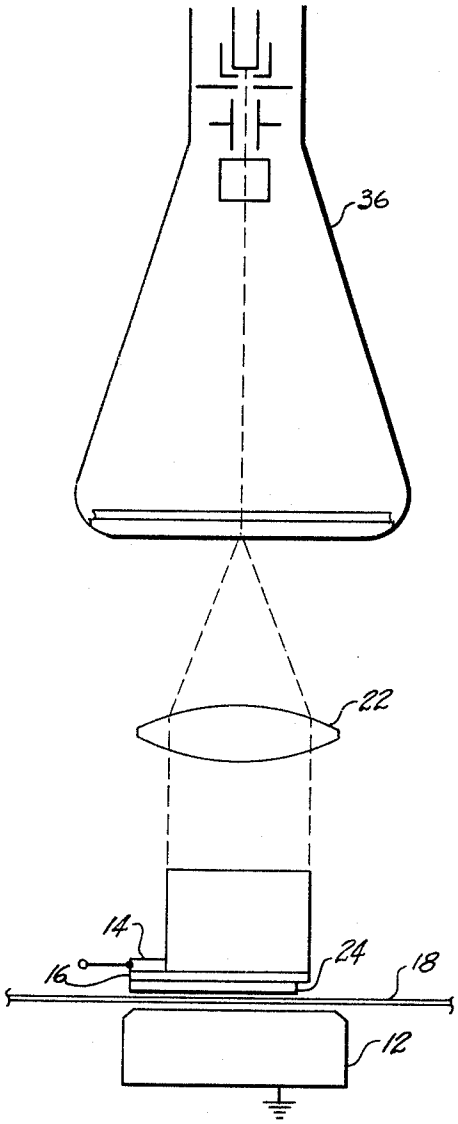

Fig. 6

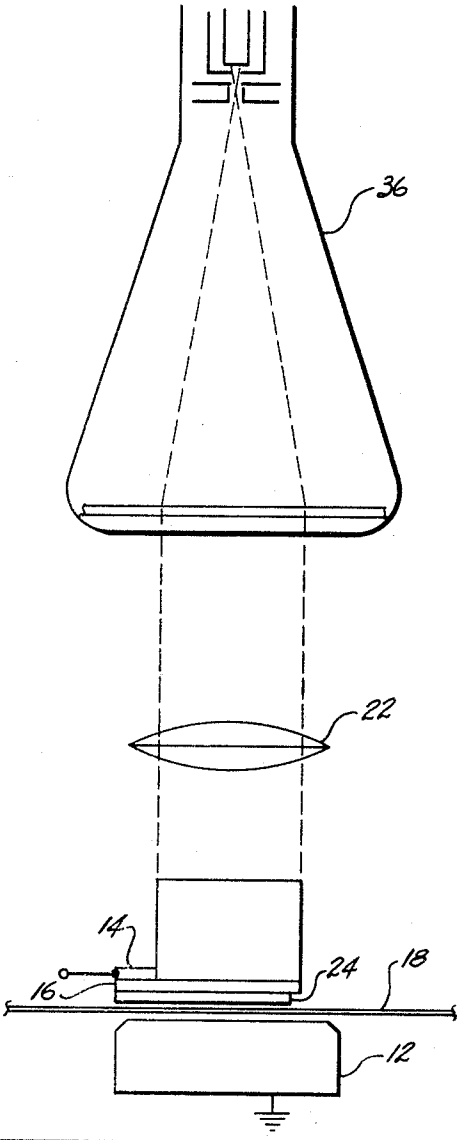

Fig. 7

JOSEPH T. McNANEY
INVENTOR.

BY Sidney Magnus

Jan. 5, 1965 J. T. McNANEY 3,164,837

ELECTROSTATIC PRINTING SYSTEM UTILIZING ILLUMINATED PHOTOCONDUCTIVE MATERIAL

Filed April 22, 1960 5 Sheets-Sheet 5

Fig. 8

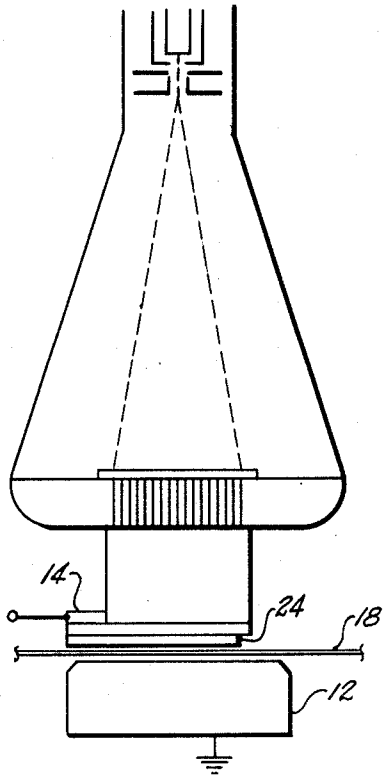

Fig. 9

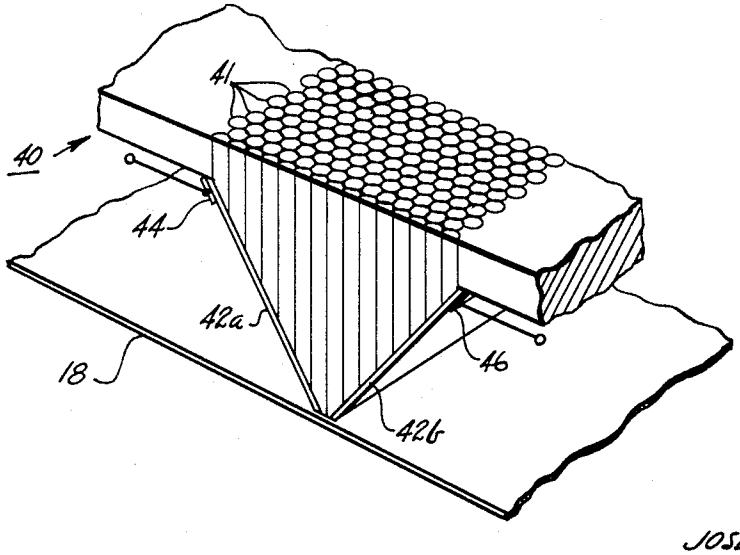

JOSEPH T. McNANEY
INVENTOR.

BY Sidney Magnie

United States Patent Office 3,164,837 Patented Jan. 5, 1965

3,164,837

ELECTROSTATIC PRINTING SYSTEM UTILIZING ILLUMINATED PHOTOCONDUCTIVE MATERIAL

Joseph T. McNaney, La Mesa, Calif., assignor to General Dynamics Corporation, Rochester, N.Y., a corporation of Delaware

Filed Apr. 22, 1960, Ser. No. 24,050
14 Claims. (Cl. 346—74)

This invention relates to electrographic printing, and more particularly to apparatus for producing an electrical discharge whose effects can be converted to a visible display.

During this printing process, an electrical discharge takes place between two electrodes; the recording medium being positioned in the space where the discharge occurs. As a result of the discharge either visible material from one of the electrodes, or a charge pattern is deposited on the surface of the recording medium. A visible pattern may be produced by causing the discharge to discolor the recording medium. Alternatively the disposition may produce a visible display directly, or the resultant charge pattern may be used to attract particles of a contrasting color.

It is the principal object of my invention to provide an improved way of producing the electrical discharge.

The attainment of this object and others will be realized from the following specification taken in conjunction with the drawings, of which:

FIGURE 1 shows one way of producing a discharge;

FIGURE 2 illustrates the basic concept of my invention; and

FIGURES 3–9 depict various embodiments thereof.

Broadly speaking, my invention contemplates the selective stretching of light spots so that stripes of a photoconductive material are irradiated. The illuminated pattern permits the production of an electrical discharge at selected points, whereas the unilluminated photoconductor maintains a high resistance—and therefore prevents a discharge.

One method of producing an electrical discharge is shown in FIGURE 1. Here a potential source **10** is connected to a lower electrode **12**, and to an upper transparent electrode **14**; the latter being positioned contiguously with a layer of photoconductive material **16**. The recording medium **18** is positioned in the air gap between photoconductor **16** and electrode **12**.

Under normal conditions the photoconductive material is not illuminated, and its electrical resistance is high. As a result, most of the potential appears across its thickness; and there isn't enough potential across the air gap to produce a discharge.

In order to initiate the discharge, a lens images light onto photoconductor **16**, causing it to assume a lower resistance at the irradiated spot. As a result, the entire potential now appears across the air gap below this spot, and a discharge occurs. Actually, a complete light pattern—corresponding to a picture or message—is imaged onto the photoconductor, producing a plurality of discharges; and the discharge pattern therefore corresponds to the picture or message.

It was found that frequently the discharge occurred even when the photoconductor was not illuminated; indicating that the photoconductor was too thin to withstand the potential. When its thickness was increased, the light did not penetrate the photoconductor; and the resistance was reduced only on the surface. On the other hand, increasing the air gap permitted the discharge to spread, instead of being concentrated; thus degrading the resolution.

The structure of FIGURE 2 overcomes the problem. Here, for simplicity, an "object"—which may be a picture, a message, etc.—to be copied is shown as transparent areas on a moving opaque medium **20**. As the medium moves, the message is "line-scanned" by cylindrical lens **22**, which has the characteristic that it elongates, or magnifies in only one direction; in the illustration it "stretches" the height of the scan line elements without affecting their width. Below the cylindrical lens is a sheet of photoconductive material **16**, onto which is imaged the elements being scanned by lens **22** at the instant.

In the illustration, the instantaneously scanned line is through the center of the word, "TONE"; and the elements of the letters that intersect the scanning line are stretched to extend transversely across photoconductor **16** from one longitudinal edge to the other. As shown, the scanning line intersects the "T" at one point; and this scanned-line element is imaged onto the photoconductor as a single, narrow, illuminated stripe. In a like manner, the scanning line intercepts the "O" at two points; and these appear as two narrow, illuminated stripes on photoconductor **16**. Similarly, the three intercepts formed by the scanning line and the "N" produces three narrow illuminated stripes. The scanning line intercepts the "E" at the bar; and this is imaged onto the photoconductor as a wide illuminated stripe. Thus, the scanned line elements are converted to a stripe pattern on the photoconductor; the width of the stripe equaling the width of the scanned line elements. The illuminated areas of the photoconductor are, of course, in their low resistance states; and conduct the potential at electrode **14** to points at the bottom edge of the photoconductor. At these points, practically the entire potential is across the air gap—thus producing electrical discharges, which in turn produce electrographic printing, or causes a charge pattern (which has been given visibility in the illustration) to be produced on the surface of a moving recording medium **18**.

As the scanning line moves across the copy, or vice versa, the pattern of illuminated stripes varies. In this way the instantaneous stripe pattern and the resultant instantaneous discharge pattern correspond to the instantaneous scanning line.

The un-illuminated stripes of the photoconductor are so long that their resistance does not permit the full potential to appear at the lower edge, and therefore no discharge occurs at these points.

An insulating support member **24** may be used for mechanical reasons.

Thus, due to my invention, a high potential may be used for electrographic printing; and yet in the absence of illumination, no electrical discharge occurs.

FIGURE 3 shows another embodiment of my invention, wherein the cylindrical lens is not used. Instead, I use a structure **25** comprising "light guides" that take the form of sheets **26**. In this embodiment, light from the scanning line enters the apexes of sheets **26**, and is transmitted to the far end of the sheet by internal reflections. As the light emerges from the distal edge of the sheet, it illuminates stripes of the photoconductor, in the same manner as previously described. This embodiment obviates the depth-of-focus problem that might be associated with the cylindrical lens.

The embodiment of my invention shown in FIGURE 4 is one wherein every portion of photoconductive material **16** is the same distance from the copy; thus also obviating the depth-of-focus problem if a lens is to be used. This embodiment shows another way of producing a scanning line without the use of a lens. Here the tops of light guide sheets **27** are blocked off, except for a narrow area where light from the message enters the light guides. The inter-

nal reflections illuminate stripes of photoconductor **16** as previously described.

In the embodiments of FIGURES 1–4, the electrical discharge occurs at the edge of the photoconductive material. If, for some reason, this condition is undesirable, the embodiment of FIGURE 5 may be used. Here the discharge occurs from the ends of probes **28**, rather than from the edge of the photoconductor **16**.

FIGURE 5 also shows another use for my invention. A beam of light impinges on an optical device **32**, such as a pivotable mirror, which changes its orientation under control of a signal source **34**. The light beam is "stretched' as previously explained, and the illuminated stripe permits the potential at electrode **14** to be applied to a selected one of probes **28**. The point of electrical discharge is thus established by the mirror and signal source; and produces a waveform **19** on recording medium **18**.

If desired, the light beam **30** may be a sheet-like beam that is parallel to the pivot-axis of the mirror; whereupon lens **22** may be eliminated.

While the object to be copied has been illustrated as having transparent areas on an opaque background, it may of course comprise opaque areas on a transparent background. Alternatively, the object may comprise contrasting lines and background; and reflected—rather than transmitted—light may be used. Under some conditions the stripe pattern would be reversed, that is, the "stripes" would be un-irradiated, while the background would be illuminated. Under these conditions the charge pattern would be reversed; but reversing the polarity of the potential source and/or the elements of the printing process would produce printing of the desired characteristics. Therefore the term "stripes" will be understood to include unradiated areas, or the irradiated areas—depending upon the pattern.

The object to be copied may be on a film, strip of paper, sheet of paper, drum, loop, or similar form of medium; and the recording medium may be similar—or a strip that is later cut into separate sheets.

Still another way of presenting the object to be copied is shown in FIGURE 6. Here, the display—instead of being on a medium such as **20** of FIGURE 1—appears on the face of a cathode ray tube **36**; the individual scanning lines providing the instantaneous illumination which is used in the manner previously described—with any of the disclosed embodiments.

In FIGURE 7, the cathode ray tube has a deflection system that, instead of producing properly proportioned characters, produces an elongated pattern. Here again, the individual scanning lines produce the instantaneous scanning line elements that are to be imaged onto the photoconductive material. The lens in this case merely collimates the light, which is therefore projected without further distortion onto the photoconductive material.

In FIGURE 8, the cathode ray tube has a deflection system similar to that described in connection with FIGURE 7, so that elongated characters are produced on the tube's faceplate. The collimating lens has been replaced by a faceplate comprising optical fibers that perform the collimating function.

FIGURE 9 shows another embodiment wherein a structure **40** of optical fibers **41** have been formed or ground so that it has two slanting surfaces. These surfaces have positioned thereon layers **42***a* and **42***b* of photoconductive material; and electrodes **44** and **46** are connected to the ends thereof. The apex of structure **40** is ground off, leaving a gap between adjacent ends of photoconductive layers **42***a* and **42***b*. A potential is applied to the terminals, and when each photoconductor is illuminated by an elongated stripe—produced as described above—the potential appears across the gap. An electrical discharge occurs, in this way producing a charge on recording material **18**.

If desired, optical fiber structure **40** may be the faceplate of a cathode ray tube, on the inner surface of which a phosphor is positioned.

The invention illustrated and described herein is illustrative only and the invention includes such other modifications and equivalents as may readily appear to those skilled in the art, within the scope of the appended claims.

The embodiments of the invention in which an exclusive property or privilege is claimed are defined as follows:

1. The combination comprising:: a sheet of photoconductive material having a given width; a first electrode in electrical contact with one longitudinal edge of said sheet; a second electrode spaced from the other longitudinal edge of said sheet; and means responsive to the impingement of light from a point for irradiating said photoconductive material in the form of a narrow transverse strip, said strip extending from said first electrode across said given width to said other longitudinal edge—whereby a potential applied to said first electrode may cause an electrical discharge between said second electrode and the ends of said strips.

2. The combination of claim 1 further comprising a source of potential, means for connecting said source between said first and second electrodes, the potential of said source and the spacing between said other longitudinal edge and said second electrode being such that a corona discharge takes place only between the irradiated areas of said photoconductive material along said other longitudinal edge and said second electrode.

3. The combination as set forth in claim 1 further including a plurality of conductive elements each having one end in contact with said other longitudinal edge of said sheet and each having the other end adjacent said second electrode.

4. The combination comprising: a sheet of photoconductive material; a first electrode positioned contiguously with one longitudinal edge of said sheet; a second electrode spaced from the other longitudinal edge of said sheet; means for applying a potential to said first electrode; an image to be recorded; means for line scanning said image and for projecting light responsive to the different portions of the image along said scanning line so as to irradiate parallel transverse strips of said photoconductive material, said strips extending from said first electrode to the other longitudinal edge of said sheet the width of the irradiated strips being directly related to the width along the scanned line of the corresponding portion of said image—whereby said potential appears at the ends of said strips adjacent said second electrode and causes an electrical discharge to take place between said ends of said strips and said second electrode.

5. The combination of claim 4 further comprising a source of potential, means for connecting said source between said first and second electrodes, the potential of said source and the spacing between said other longitudinal edge and said second electrode being such that a corona discharge takes place only between the irradiated areas of said photoconductive material along said other longitudinal edge and said second electrode.

6. The combination comprising: a sheet of photoconductive material having two longitudinal edges; an object to be copied; means for line scanning said object; and means for causing the intercepts of the scanning line and said object to be converted to irradiated strips on said photoconductive material that extend transversely to said longitudinal edges.

7. The combination of claim 6 wherein said last means comprises a lens.

8. The combination of claim 6 wherein said last means comprises light guide sheets.

9. The combination of claim 8 wherein said light guide sheets have a scanning line formed by the apexes of said sheets.

10. The combination of claim 8 wherein said light guide sheets have a scanning line formed by a transparent area.

11. The combination comprising: a sheet of photocon-

ductive material, having two longitudinal edges; an object to be copied; means for causing the scanning line elements of said object to be elongated so that they form irradiated strips on said photoconductive material extending between said longitudinal edges; a first electrode in electrical contact with one end of said strips; means for applying a potential to said first electrode—whereby said potential appears at said other longitudinal edge in the vicinity of said strips; a second electrode spaced from said other longitudinal edge; and a recording medium positioned between said second electrode and said other longitudinal edge.

12. The combination comprising: a sheet of photoconductive material, having two longitudinal edges; an object to be copied; means for causing the scanning line elements of said object to be elongated so that they form irradiated strips on said photoconductive material extending between said longitudinal edges; a first electrode in electrical contact with one said longitudinal edge; means

for applying a potential to said first electrode—whereby said potential appears at said other longitudinal edge in the vicinity of said strips; a second electrode spaced from said other longitudinal edge; and a recording medium positioned between said second electrode and said other longitudinal edge.

13. The combination of claim 12 wherein said elongation means comprises the deflection system of a cathode ray tube.

14. The combination of claim 13 wherein the faceplate of said cathode ray tube comprises optical fibers.

References Cited in the file of this patent

UNITED STATES PATENTS

2,866,903	Berchtold	Dec. 30, 1958
2,883,543	Wohl	Apr. 21, 1959
2,890,922	Huebner	June 16, 1959
2,925,310	Perkins	Feb. 16, 1960