(12) INTERNATIONAL APPLICATION PUBLISHED UNDER THE PATENT COOPERATION TREATY (PCT)

(19) World Intellectual Property Organization
International Bureau

(43) International Publication Date
22 October 2015 (22.10.2015)

WIPO | PCT

(10) International Publication Number
WO 2015/160609 A1

(51) International Patent Classification:
C01B 3/38 (2006.01) *C10J 3/06* (2006.01)
C01B 3/48 (2006.01) *F01K 23/06* (2006.01)
C01B 13/02 (2006.01)

(21) International Application Number:
PCT/US2015/025052

(22) International Filing Date:
9 April 2015 (09.04.2015)

(25) Filing Language: English

(26) Publication Language: English

(30) Priority Data:
61/980,149 16 April 2014 (16.04.2014) US

(71) Applicant: **PRAXAIR TECHNOLOGY, INC.** [US/US]; 39 Old Ridgebury Road, Danbury, CT 06810 (US).

(72) Inventors: **KELLY, Sean, M.**; 108 Cavershan Woods, Pittsford, NY 14534 (US). **CHAKRAVARTI, Shrikar**; 12 Gina Meadows, East Amherst, NY 14051 (US). **DRNEVICH, Raymond, F.**; 5850 Creekview Drive, Clarence Center, NY 14032 (US).

(74) Agents: **MANCINI, Ralph, J.** et al.; Praxair, Inc., 39 Old Ridgebury Road, Danbury, CT 06810 (US).

(81) Designated States *(unless otherwise indicated, for every kind of national protection available)*: AE, AG, AL, AM, AO, AT, AU, AZ, BA, BB, BG, BH, BN, BR, BW, BY, BZ, CA, CH, CL, CN, CO, CR, CU, CZ, DE, DK, DM, DO, DZ, EC, EE, EG, ES, FI, GB, GD, GE, GH, GM, GT, HN, HR, HU, ID, IL, IN, IR, IS, JP, KE, KG, KN, KP, KR, KZ, LA, LC, LK, LR, LS, LU, LY, MA, MD, ME, MG, MK, MN, MW, MX, MY, MZ, NA, NG, NI, NO, NZ, OM, PA, PE, PG, PH, PL, PT, QA, RO, RS, RU, RW, SA, SC, SD, SE, SG, SK, SL, SM, ST, SV, SY, TH, TJ, TM, TN, TR, TT, TZ, UA, UG, US, UZ, VC, VN, ZA, ZM, ZW.

(84) Designated States *(unless otherwise indicated, for every kind of regional protection available)*: ARIPO (BW, GH, GM, KE, LR, LS, MW, MZ, NA, RW, SD, SL, ST, SZ, TZ, UG, ZM, ZW), Eurasian (AM, AZ, BY, KG, KZ, RU, TJ, TM), European (AL, AT, BE, BG, CH, CY, CZ, DE, DK, EE, ES, FI, FR, GB, GR, HR, HU, IE, IS, IT, LT, LU, LV, MC, MK, MT, NL, NO, PL, PT, RO, RS, SE, SI, SK, SM, TR), OAPI (BF, BJ, CF, CG, CI, CM, GA, GN, GQ, GW, KM, ML, MR, NE, SN, TD, TG).

Declarations under Rule 4.17:

— *as to applicant's entitlement to apply for and be granted a patent (Rule 4.17(ii))*

— *as to the applicant's entitlement to claim the priority of the earlier application (Rule 4.17(iii))*

Published:

— *with international search report (Art. 21(3))*

(54) Title: METHOD AND SYSTEM FOR OXYGEN TRANSPORT MEMBRANE ENHANCED INTEGRATED GASIFIER COMBINED CYCLE (IGCC)

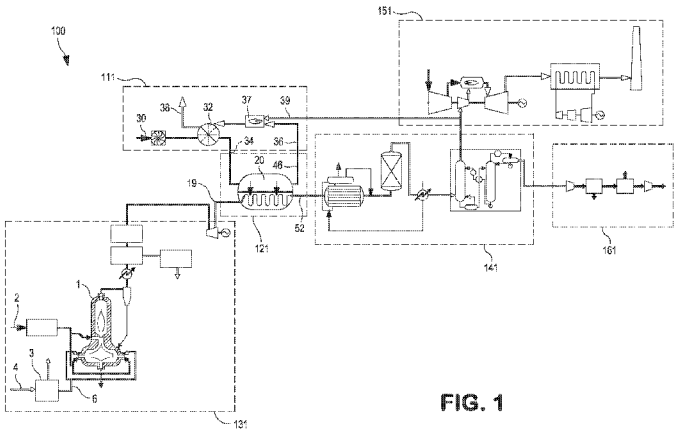

FIG. 1

(57) Abstract: A system and method for oxygen transport membrane enhanced Integrated Gasifier Combined Cycle (IGCC) is provided. The oxygen transport membrane enhanced IGCC system is configured to generate electric power and optionally produce a fuel/liquid product from coal-derived synthesis gas or a mixture of coal- derived synthesis gas and natural gas derived synthesis gas.

WO 2015/160609 A1

METHOD AND SYSTEM FOR OXYGEN TRANSPORT MEMBRANE ENHANCED INTEGRATED GASIFIER COMBINED CYCLE (IGCC)

Field of the Invention

(0001) The present invention provides a method and system for producing a synthesis gas mixture, and more particularly for producing electric power and/or a liquid product from a coal-derived synthesis gas and optionally from a mixture of the coal-derived synthesis gas and natural gas derived synthesis gas produced from a reactively-driven oxygen transport membrane based reforming reactor or converter.

Background

(0002) The Integrated Gasifier Combined Cycle (IGCC) is a well-known and documented cycle utilizing coal feedstock, oxygen from a cryogenic air separation unit, and steam/water input to create a synthesis gas that can be cooled, cleaned up, and used in a gas turbine and HRSG arrangement for power production. The cleaned synthesis gas can be subjected to a water-gas shift reaction to increase the hydrogen content, then a solvent system such as Selexol^{TM} or MDEA can be used to capture and remove the carbon dioxide for sequestration while the concentrated hydrogen gas stream can be directed to the gas turbine. In prior art IGCC systems, the hydrogen fuel directed to the gas turbine is preferably diluted with nitrogen gas from the cryogenic air separation unit process to achieve a lower heating value in the range of about 120 btu/scf to facilitate operation of the gas turbine.

(0003) However, the IGCC cycle is a very costly system that includes high operating costs as well as high capital costs due, in part, to the large cryogenic air separation unit required to supply the oxygen required for the IGCC process and nitrogen diluents for the hydrogen-rich synthesis gas fueled gas turbines as well as the water-gas shift reactors required to facilitate carbon dioxide removal and production of hydrogen-rich fuel for the gas turbines. In addition, many IGCC plants or systems operate at a reduced level of carbon conversion of the coal-

derived synthesis gas requiring larger carbon capture and sequestration (CCS) systems.

(0004) Accordingly, there is a continuing need to enhance the performance and cost effectiveness of the coal-based IGCC systems and processes. In addition, there is a long-standing need to improve the economics of prior art IGCC systems so as to commercially enable liquids synthesis as an IGCC plant co-product or to commercially enable a coal-to-liquids application.

(0005) Several concepts for CCS enabled coal power plants have been considered using oxygen transport membrane technology. One such concept is the advanced power cycle where oxygen transport membrane process heaters, synthesis gas expanders, and an oxygen transport membrane based boiler/steam cycle are employed as generally described in United States Patent Nos. 7,856,829 and 8,196,387. In this oxygen transport membrane based advanced power cycle, coal is first gasified in an oxygen-blown gasifier to generate coal-derived synthesis gas. The coal-derived synthesis gas is heated in an oxygen transport membrane-fired process heater to raise its temperature before being expanded in a hot synthesis gas expander to generate electrical power. The synthesis gas may then be reheated and expanded in one or more subsequent stages until adequate power is recovered from the high pressure coal-derived synthesis stream. The reduced pressure synthesis gas is then sent to one or more oxygen transport membrane-fired boiler process units where the majority of oxy-combustion and heat conversion to power takes place. Alternately, the advanced power cycle can be configured to convert a hydrocarbon containing gas, for example natural gas into synthesis gas using an oxygen transport membrane based reforming reactor; combust the synthesis gas in an oxygen transport membrane based boiler to raise steam, and expand steam in a steam turbine to generate electric power.

(0006) In these prior art oxygen transport membrane based power generation systems, the oxygen transferred across the membrane elements is supplied from low pressure heated air and reacts with a portion of the synthesis gas fuel. Since the rate of oxygen transport is limited by the availability of the membrane area, the oxidation of synthesis gas will take place over a large area

within the boiler. As the synthesis gas gets oxidized, the driving force for oxygen transport will decrease and the required membrane area per unit of oxygen will increase. For practical reasons, the oxygen transport membrane will be used to supply oxygen to the fuel side until about 80-90% fuel combustion is achieved. The remainder of fuel will be combusted using oxygen supplied from the cryogenic air separation unit (ASU) which also supplies oxygen to the coal gasifier.

(0007) After the coal-derived synthesis gas fuel is completely oxidized with externally supplied and cryogenically produced oxygen, the flue gas will pass through a convective section of the boiler for further steam generation and boiler feed water preheating. The flue gas exiting the boiler is processed according to a purification process for a conventional oxy-fuel technology. Detailed techno-economic evaluation of this CCS power plant at 550 MW rating has shown the ability to displace at least 70% of the cryogenically-derived oxygen from the process, while achieving a carbon capture cost of less than $40/ton, and increasing the cost of electricity by less than 40% versus non-CCS pulverized coal powerplant.

(0008) The use of oxygen transport membrane (OTM) systems have also been contemplated in connection with boilers to generate steam used to produce electricity, as disclosed in United States patent publication number US 2014/0183866. This advanced power cycle system and method for generating electrical power uses a high pressure synthesis gas stream that is partially oxidized in an oxygen transport membrane based reactor, expanded and thereafter, is combusted in an oxygen transport membrane based boiler. The combustion within the boiler generates heat to raise steam to in turn generate electricity by a generator coupled to a steam turbine. The resultant flue gas can be purified to produce a carbon dioxide product.

(0009) Praxair has also recently developed various concepts and systems around synthesis gas production, methanol production, and Fischer-Tropsch liquids production with oxygen transport membrane technology using natural gas in a combined reformer configuration (See for example, United States patent applications published as US2014/0319424; US2014/0323598; US2014/0319427; US2014/0323598 and United States patent application serial number 14/638344,

the disclosures of which are incorporated by reference herein). In addition, use of the oxygen transport membrane technology with natural gas in a combined reformer configuration (e.g. primary reformer/secondary reformer configuration) alone, or together with a coal derived synthesis gas has been shown and described in United States patent application serial number 14/619260, the disclosure of which is incorporated by reference herein.

(00010) What is still needed, however, is a commercially viable way of integrating natural gas based oxygen transport membrane technology with coal-derived synthesis gas. Successful integration would enable enhanced carbon conversion of coal synthesis gas while reducing the overall oxygen requirement from the cryogenic air separation unit as well as the steam input to the coal gasifier, with the additional oxygen and higher temperature secondary reforming occurring within an oxygen transport membrane based reactor or converter.

Summary of the Invention

(00011) The present invention in one or more aspects can be characterized as an oxygen transport membrane based hydrogen-rich fuel gas production system comprising: (i) a coal gasification subsystem configured to produce a coal-derived synthesis gas stream from a source of coal, steam and a first oxygen stream; (ii) a reactively driven oxygen transport membrane based conversion subsystem configured to treat the coal-derived synthesis gas stream with at least a second oxygen stream to form a hydrogen-rich effluent stream; and (iii) a gas conditioning subsystem configured to treat the hydrogen-rich effluent stream to produce the hydrogen-rich fuel gas. The first oxygen stream is provided by separation of oxygen from air at cryogenic temperatures whereas the second oxygen stream is provided by separation of oxygen from air at elevated temperatures within the oxygen transport membrane based conversion subsystem and wherein the mass of the second oxygen stream divided by the total mass of the first and second oxygen streams is in the range of 0.1 to 0.7.

(00012) Alternatively, the present invention may be characterized as an oxygen transport membrane based power generation system comprising: (i) a coal

gasification subsystem configured to produce a coal-derived synthesis gas stream from a source of coal, steam and a first oxygen stream; (ii) an oxygen transport membrane based conversion subsystem configured to treat the coal-derived synthesis gas stream and reform a separate hydrocarbon feed stream with at least a second oxygen stream to form a hydrogen-rich effluent stream; wherein the oxygen transport membrane based conversion subsystem further comprises a combined reforming reactor configured to react the hydrocarbon containing feed stream and steam to form the hydrocarbon-derived synthesis gas stream; and (iii) a gas conditioning subsystem configured to treat the hydrogen-rich effluent stream to provide a hydrogen-rich fuel gas to a gas turbine. The first oxygen stream is provided from a source that separates oxygen from air at cryogenic temperatures whereas the second oxygen stream is provided by separation of oxygen from air at elevated temperatures within the oxygen transport membrane based conversion subsystem. The coal-derived synthesis gas stream input into the oxygen transport membrane based conversion system contains at least 5.0 volume % hydrocarbons and the hydrogen-rich effluent stream contains less than about 2.0 volume % hydrocarbons.

(00013) The present invention may further be characterized as an oxygen transport membrane based co-products system comprising: (i) a coal gasification subsystem configured to produce a coal-derived synthesis gas stream from a source of coal, steam and a first oxygen stream; (ii) an oxygen transport membrane based conversion subsystem configured to treat the coal-derived synthesis gas stream, a hydrocarbon containing feed stream and steam with at least a second oxygen stream to form a hydrogen-rich effluent stream; (iii) a gas conditioning subsystem configured to treat the hydrogen-rich effluent stream to provide a hydrogen-rich fuel gas; (iv) a gas turbine system configured to combust the hydrogen-rich fuel gas and generate electricity; and (v) a steam turbine configured to generate electricity from steam produced by the recovered heat in gas turbine exhaust gas. The first oxygen stream is provided from a source that separates oxygen from air at cryogenic temperature and the second oxygen stream is provided by separation of oxygen from air at elevated temperature within the oxygen transport membrane

based conversion subsystem. The coal-derived synthesis gas stream treated in the oxygen transport membrane based conversion system contains at least 1.0 volume % hydrocarbons and the hydrogen-rich effluent stream contains less than about 2.0 volume % hydrocarbons.

(00014) In several other aspects, the present invention may be characterized as a method or methods for producing a hydrogen-rich fuel gas or as an oxygen transport membrane based converter assembly as generally set forth in the appended claims.

(00015) Advantageously, the addition of an oxygen transport membrane based subsystem allows for reduced oxygen input from the first oxygen stream to the coal gasifier and increased carbon conversion of the synthesis gas. In other words, there is less methane slip, and more hydrogen for power production.

(00016) Supplementing the coal-derived synthesis gas with a natural gas derived synthesis gas produced in a primary reformer, the mixture or combination of coal-derived synthesis gas and natural gas derived synthesis gas can be subjected to a conversion or secondary reforming reaction within the oxygen transport membrane based reforming reactor or converter. Such secondary reforming or conversion uses oxygen transport membrane supplied oxygen to oxidize a portion of the hydrogen and carbon monoxide in the synthesis gas. The heat and reaction products generated therefrom facilitate the secondary reforming or conversion of any unreacted methane in the mixed synthesis gas feed. As the amount of natural gas input increases relative to the coal feed, the total fraction of oxygen input to the system or plant provided by the oxygen transport membrane increases and the oxygen input provided by the air separation unit to the system decreases. Using the natural gas based oxygen transport membrane enhanced IGCC system and process, more hydrogen is produced per unit of carbon for power-generation in the context of carbon capture.

(00017) Also, since coal-derived synthesis gas is generally deficient of hydrogen, the use of coal-derived synthesis gas for liquid synthesis using a Fischer-Tropsch is economically challenging. To overcome this challenge, many prior art systems require a water-gas-shift reactor to facilitate increasing the hydrogen

content and improve liquid synthesis economics. A portion of the shifted synthesis gas is added to the pre-shift coal-derived synthesis gas to produce the desired H_2/CO ratio of about 2.0 for Fischer-Tropsch liquid synthesis. However, using the above-described natural gas based oxygen transport membrane enhanced system and process, production of a Fischer-Tropsch liquid becomes economically feasible without hydrogen addition to the synthesis gas. In particular, at a critical level of natural gas input, the H_2/CO ratio of the reacted synthesis gas approaches the value of 2.0 without hydrogen addition and no shifted gas needs to be diverted to facilitate the Fischer-Tropsch synthesis.

Brief Description of the Drawings

(00018) The above and other aspects, features, and advantages of the present invention will be more apparent from the following, more detailed description thereof, presented in conjunction with the following drawings, in which:

(00019) Fig. 1 shows a schematic illustration of a IGCC method and system with carbon capture for producing electric power from a coal-derived synthesis gas using an oxygen transport membrane based reforming reactor or converter in accordance with an embodiment of the invention;

(00020) Fig. 2 shows an illustration of an oxygen transport membrane based reforming reactor or converter suitable for use with the embodiment of Fig. 1;

(00021) Fig. 3 shows a schematic illustration of an oxygen transport membrane enhanced IGCC method and system with carbon capture for producing electric power from a mixture of a coal-derived synthesis gas and natural gas based synthesis gas produced from an oxygen transport membrane based reforming reactor or converter in accordance with another embodiment of the invention;

(00022) Fig. 4 shows a schematic illustration of an oxygen transport membrane enhanced IGCC method and system with carbon capture for synthesizing a fuel/liquid product and producing electric power using a mixture of a coal-derived synthesis gas and natural gas based synthesis gas produced from an

oxygen transport membrane based reforming reactor or converter in accordance with yet another embodiment of the invention;

(00023) Fig. 5 shows an illustration of an oxygen transport membrane based reforming reactor or converter suitable for use with the embodiments of Fig. 3 and Fig. 4; and

(00024) Fig. 6 shows an illustration of another oxygen transport membrane based reforming reactor or converter suitable for use with the embodiments of Fig. 3 and Fig. 4.

(00025) Fig. 7 shows an illustration of yet another oxygen transport membrane based reforming reactor or converter suitable for use with the embodiments of Fig. 3 and Fig. 4.

Detailed Description

(00026) Turning now to Fig. 1, there is shown a schematic illustration of one embodiment of the present oxygen transport membrane enhanced IGCC method and system that generates electric power from a coal-derived synthesis gas that is upgraded using an oxygen transport membrane based reforming reactor or converter. The oxygen transport membrane enhanced IGCC system comprises: (i) a coal gasification subsystem 131, preferably comprising an entrained flow coal gasifier, configured for generating a source of coal-derived synthesis gas 19; (ii) an oxygen transport membrane based subsystem 121 containing an oxygen transport membrane based reforming reactor or converter 20 configured for upgrading the quality of the coal-derived synthesis gas produced in the coal gasification subsystem; (iii) an air intake subsystem 111 configured for supplying a heated air feed stream 34 to the oxygen transport membrane based reforming reactor or converter; (iv) a synthesis gas conditioning subsystem 141 that preferably includes a heat recovery train, a water-gas shift reactor, a synthesis gas separation and purification unit; (v) a carbon dioxide purification unit 161; and (vi) a power generating subsystem 151.

(00027) A key feature of the present system and method is the oxygen transport membrane based reforming reactor or converter. This converter is

essentially an oxygen-blown secondary reformer, but it operates without a cryogenically produced oxygen supply. In this arrangement, the oxygen transport membrane based converter serves to further react the coal-derived synthesis gas at high temperatures effectively increasing the amount of carbon that is converted to carbon monoxide, and subsequently utilized to shift water vapor to hydrogen with resulting carbon dioxide available for capture. With this secondary conversion in the oxygen transport membrane enhanced IGCC system, the coal gasifier may be operated with reduced cryogenically produced oxygen input relative to the coal input.

(00028) Fig. 2 depicts the preferred oxygen transport membrane based reforming reactor or converter configured to upgrade or convert the coal-derived synthesis gas 19 produced in the coal gasification subsystem of Fig. 1. In this embodiment, the synthesis gas from the coal gasification subsystem is directed to the reactant side of the oxygen transport membrane reactor or converter after clean-up and desulfurization of the coal-derived synthesis gas. The oxygen transport membrane oxidizes a portion of the hydrogen and carbon monoxide with pure oxygen transported through the membrane to the reactant side releasing heat and producing some reaction products, namely H_2O and carbon dioxide. In the presence of a suitable reforming catalyst and the heat generated by the oxidation process, residual methane present in the coal-derived synthesis gas converts to additional hydrogen and carbon monoxide while some H_2O and carbon dioxide converts to hydrogen and carbon monoxide through steam-methane reforming, reverse water-gas shift, and dry-reforming reactions. Because of the high operating temperatures (e.g. 1000 °C) associated with the oxygen transport membrane the upgraded synthesis gas will equilibrate with a low methane slip (i.e. <1% by volume), and a higher content of carbon monoxide and hydrogen than the coal-derived synthesis gas fed to the oxygen transport membrane converter. As indicated above, oxygen transport membrane converter, integrated with a catalyst, operates much like an oxygen-blown secondary reformer; however, the source of oxygen is from a low-pressure air supply on the oxidant side of the membrane elements, and the heat for the reactions is provided by the oxidation of a portion of the hydrogen and carbon

monoxide in the synthesis gas with pure oxygen transported through the membrane. In this mode, if there is an excess heat, it may be transferred via radiative heat transfer to a suitable load in the form of a process gas passing through adjacent heating tubes. The process gas can be a synthesis gas, steam, or any other suitable gas that requires preheating or reheating to a temperature in the 300 °C to 850 °C range.

(00029) Turning now to Fig. 3, there is shown another embodiment of the present oxygen transport membrane enhanced IGCC method and system that generates electric power from a mixture of coal-derived synthesis gas and natural gas derived synthesis gas. The oxygen transport membrane enhanced IGCC system 300 comprises: (i) a coal gasification subsystem 331, preferably comprising an entrained flow coal gasifier, configured for generating a source of coal-derived synthesis gas 19; (ii) a natural gas and steam combined feed subsystem 371 adapted for providing a natural gas feed and steam feed to the oxygen transport membrane enhanced IGCC system; (iii) an oxygen transport membrane based subsystem 321 configured for reforming the natural gas feed, mixing the natural gas derived synthesis gas with the coal-derived synthesis gas, and upgrading the mixed synthesis gas in an oxygen transport membrane based converter; (iv) an air intake subsystem 311 configured for supplying a heated air feed stream to the oxygen transport membrane based reforming reactor or converter; (v) a synthesis gas conditioning subsystem 341 that preferably includes a heat recovery train, a water-gas shift reactor, a synthesis gas separation and purification unit; a carbon dioxide purification unit 361; and (vi) a power generating subsystem 351.

(00030) Fig. 4 shows yet another embodiment of the present oxygen transport membrane enhanced IGCC method and system that is specifically configured or adapted to produce co-products including a fuel/liquid product, preferably in a Fischer-Tropsch synthesis process, and electric power from a mixture of coal-derived synthesis gas and natural gas derived synthesis gas. The oxygen transport membrane enhanced IGCC system shown in Fig. 4 comprises: (i) a coal gasification subsystem 431, preferably comprising an entrained flow coal gasifier, configured for generating a source of coal-derived synthesis gas; (ii) a

natural gas and steam combined feed subsystem 471 adapted for providing a natural gas feed and steam feed to the oxygen transport membrane enhanced IGCC system; (iii) an oxygen transport membrane based subsystem 421 configured for reforming the natural gas feed, mixing the natural gas derived synthesis gas with the coal-derived synthesis gas, and upgrading the mixed synthesis gas in an oxygen transport membrane based converter; (iv) an air intake subsystem 411 configured for supplying a heated air feed stream to the oxygen transport membrane based reforming reactor or converter; (v) a synthesis gas conditioning subsystem 441 that preferably includes a heat recovery train, a water-gas shift reactor, a synthesis gas separation and purification unit; a carbon dioxide purification unit 441; (vi) a power generating subsystem 461; and (vii) a liquid/fuel product synthesis subsystem 481.

(00031) In the arrangements described with reference to Fig. 3 and Fig. 4, both coal and natural gas feedstocks may be used for increased efficiency and lower carbon dioxide emitting combined cycle plants within a framework of proven and available carbon dioxide capture technology. Additionally, for Fischer-Tropsch synthetic fuels or methanol synthesis, synthesis gas produced from coal is generally hydrogen deficient, and synthesis gas produced from natural gas is generally hydrogen rich. Blending the synthesis gas derived from both fuel sources allows for more flexibility and efficiency with respect to achieving the ideal synthesis gas characteristics to support downstream liquid product synthesis.

(00032) Fig. 5, Fig. 6 and Fig. 7 depict preferred arrangements or embodiments of the preferred oxygen transport membrane based reforming reactor or converter configured or adapted for use in the natural gas based oxygen transport membrane enhanced IGCC systems shown in Fig. 3 and Fig. 4. As with the earlier described embodiments, the coal-derived synthesis gas from the coal gasification subsystem is directed to the reactant side of the oxygen transport membrane based reforming reactor or converter after clean-up and desulfurization of the coal-derived synthesis gas. The combined feed stream comprising natural gas and steam, on the other hand, is directed to either a reforming tube (Fig. 5) or to the reactant side of the oxygen transport membrane based reforming reactor (Fig. 6)

where it is mixed with the cleaned and desulfurized synthesis gas from the coal gasification subsystem.

(00033) Within the oxygen transport membrane based reforming reactor or converter shown in Fig. 5, a portion of the hydrogen and carbon monoxide in the mixed synthesis gas is oxidized with pure oxygen transported through the membrane to the reactant side releasing heat and producing some reaction products, namely H_2O and carbon dioxide. In the presence of a suitable reforming catalyst disposed within the oxygen transport membrane reforming tube and the heat generated by the oxidation reaction, the residual methane present in the mixed synthesis gas stream is converted to additional hydrogen and carbon monoxide while some H_2O and carbon dioxide converts to hydrogen and carbon monoxide through steam-methane reforming, reverse water-gas shift, and dry-reforming reactions.

(00034) In the embodiment of Fig. 5, process tubes are loaded with a reforming catalyst and are configured to convert or reform the natural gas with steam in the presence of radiant heat provided from the oxygen transport membrane elements or tubes. Since these reforming tubes operate at lower temperatures (i.e. 750 °C to 900 °C) than the oxygen transport membrane elements or tubes, the natural gas-derived synthesis gas produced in the reforming tubes will contain a significant amount of methane slip. This natural gas derived synthesis gas is combined with the coal-derived synthesis gas and this mixed synthesis gas stream is upgraded or converted using the oxygen transport membrane based reactor or converter, as generally described above with reference to Fig. 2. Alternately as shown in Fig. 6 the oxygen transport membrane based reforming reactor or converter can be configured to introduce coal-derived synthesis gas stream in the process tubes loaded with reforming catalyst. In this arrangement, the coal and cryogenically produced oxygen input to the cycle is further reduced compared to the coal-only embodiment of Fig. 1, while obtaining the same amount of hydrogen fuel to be supplied to the gas turbines, and with lower amounts of carbon dioxide produced for capture.

(00035) In the embodiment of Fig. 7, a portion of the hydrogen and carbon monoxide in the coal-derived synthesis gas is oxidized with pure oxygen transported through the membrane to the reactant side also releasing heat and producing some reaction products. In the presence of a suitable reforming catalyst disposed within the oxygen transport membrane reforming tube and the heat generated by the oxidation reaction, the residual methane present in the coal-derived synthesis gas stream and the methane in the natural gas based combined feed stream are converted to hydrogen and carbon monoxide through various reactions including steam-methane reforming. The embodiment of Fig. 7 simulates a near autothermal reforming type operation and would require sufficient catalyst activity such that the coal-derived synthesis gas, together with the natural gas and steam feed may be converted within the oxygen transport membrane reforming tube in a once-through arrangement. In this arrangement, where Fischer-Tropsch synthesis is to be supported, the hydrogen post shift and acid gas removal or separation can be combined with the pre-shift synthesis gas to achieve the desired H_2/CO ratio of about 2.0. As the natural gas input is increased, progressively less hydrogen is required to be separated and blended back to the synthesis gas to support Fischer-Tropsch liquids synthesis. This results in still more carbon and hydrogen from the feedstock available for conversion to liquid product, and less hydrogen liberated for power recovery, and less carbon dioxide produced for capture.

(00036) The coal-derived synthesis gas when reacted in the oxygen transport membrane based converter or secondary reformer can be utilized in the same mode as traditional IGCC system configurations with or without carbon capture and sequestration (CCS). The further addition of a primary reformer using natural gas and steam upstream of the oxygen transport membrane based converter or secondary reformer, would enable the production of a mixed synthesis gas with higher H_2/CO ratio that can be produced for: (i) use solely in the enhanced IGCC power generation process with or without CCS; (ii) use solely in a Fischer-Tropsch liquids synthesis process; or (iii) an IGCC power generation (with or without CCS)

and with a Fischer-Tropsch liquids co-product; or (iv) an IGCC power generation (with or without CCS) and with a Fischer-Tropsch liquids off-peak product.

(00037) Elements of each of the above-described subsystems shown in Fig. 1, Fig. 3 and Fig. 4 together with operational aspects of each subsystem are disclosed in detail below.

COAL GASIFIER SUBSYSTEM

(00038) Various embodiments of the present inventions contemplate the use of a conventional coal gasification subsystem 131, 331 or 431 as generally shown in Figs 1, 3 and 4, respectively. In a typical coal gasification subsystem, a pulverized coal feedstock is fed to a gasification unit along with steam and oxygen supplied from a cryogenic air separation unit. In the disclosed embodiments, the cryogenic air separation unit is preferably a commercially available low purity, low to intermediate pressure air separation unit, known to those persons skilled in the art cryogenic air separation plants, although more complex air separation units can be employed to meet other industrial gas requirements of the plant or facility.

(00039) In practice, the coal gasification unit may comprise a single coal gasification reactor or a plurality of reactors connected in a series of stages which collectively achieve the desired coal gasification, that is, the formation of a coal-derived synthesis gas stream. Preferably, the coal gasification unit is an entrained flow, fixed bed, or fluidized bed coal gasifier. In the coal gasification process, the steam and oxygen injected into the coal beds result in the partial oxidation of the coal at temperatures between about 750 ^{o}C and 1500 ^{o}C and pressures of between about 300 psia and 1000 psia. At these high temperatures and pressurized conditions, the molecular bonds of coal and steam are broken down, releasing a raw synthesis gas stream that contains at least hydrogen and carbon monoxide and which also typically contains other substances such as carbon dioxide, water vapor, hydrocarbons, volatilized tars, particulate matter, and sulfides. The portions of the coal feedstock which are not transformed into raw synthesis gas may become a slag material that resembles glass, sulfur byproducts or ammonia. There is also some ash generally formed in the coal gasifier which is removed later in the gasification

process. The tars, oils, phenols, ammonia and water co-products are preferably condensed from the raw synthesis gas stream and purified, as appropriate. The synthesis gas is then directed to a filter or cleaning area where further impurities are removed. The resulting coal-derived synthesis gas is typically at a temperature of between about 500 °C and 1000 °C and at a pressure of between about 300 psia and 1000 psia.

(00040) For some of the embodiments presented in this invention, the preferred coal gasifier type may be the entrained flow gasifier. Operating pressures for entrained flow coal gasifiers (e.g. those made by General Electric, Conoco Phillips, Shell, Siemens, etc.) typically range from 300 to 1500 psig and more typically from 500 to 1100 psig. In this case, coal may be fed in dry particulate form or may be mixed with water and fed as a slurry to the gasifier.

(00041) The coal-derived synthesis gas may require a pretreatment subsystem for H_2S and COS control that is disposed downstream of the coal gasifier and upstream of the oxygen transport membrane based reforming reactor or converter. The preferred coal-derived synthesis gas pretreatment process is solvent-based (MDEA) sulfur removal process, although a warm gas cleanup process using a solid regenerable sorbent may alternatively be used.

NATURAL GAS AND STEAM COMBINED FEED SUBSYSTEM

(00042) As shown in Fig. 3 and Fig. 4, the natural gas and steam combined feed subsystem 371 or 471 is configured such that the natural gas feed stream to be reformed within the oxygen transport membrane enhanced IGCC system is typically preheated in one or more heat exchangers that serve as a natural gas feed preheaters. Also, since the natural gas typically contains unacceptably high level of sulfur species, the natural gas feed stream undergoes a sulfur removal process such as hydro-desulfurization (HDS). HDS is a catalytic chemical process widely used to remove sulfur from the natural gas feedstock. To facilitate the desulfurization, a small amount of hydrogen or hydrogen-rich gas is added to natural gas feed upstream of the heat exchangers. Further, since the natural gas based mixed feed stream generally contains some higher hydrocarbons that will break down at high

temperatures to form unwanted carbon deposits that adversely impact the reforming process, the natural gas based mixed feed stream may optionally be pre-reformed in an adiabatic pre-reformer (not shown), which converts higher hydrocarbons present in the mixed feed stream to methane, hydrogen, carbon monoxide, and carbon dioxide. An alternative pre-reformer suitable for use with the present embodiments would be a heated pre-reformer that is thermally coupled with the oxygen transport membrane based reforming subsystem.

(00043) Steam is then added to the heated and desulfurized natural gas feed stream. The steam is preferably superheated steam at a pressure between about 15 bar to 80 bar and a temperature between about 300 °C and 600 °C and may be generated in a fired heater using a source of process steam or diverted from other portions of the system. The superheated steam is preferably added to the natural gas feed stream upstream of any pre-reformer to adjust the steam to carbon ratio and final temperature of the combined natural gas based feed stream. If required, the combined natural gas based feed stream may be further preheated to get the combined feed stream to the desired temperature. The temperature of the combined natural gas based feed stream directed to the oxygen transport membrane based reforming reactor or converter is preferably between about 300 °C and 750 °C, and more preferably between about 450 °C and 600 °C. The steam to carbon ratio of the combined natural gas based feed stream is preferably between about 1.0 and 2.5, and more preferably between about 1.2 and 2.2.

AIR PREHEAT SUBSYSTEM

(00044) With reference again to Figs. 1, 3 and 4, the air supply and preheating subsystem 111, 311 or 411 includes a source of feed air or other oxygen containing feed stream; an air preheater for example a continuously rotating regenerative air preheater configured to heat the source of feed air; and conduits for supplying the heated feed air stream from the regenerative air preheater to the oxygen transport membrane based reforming reactor. The air supply and preheat subsystem further includes a plurality of return conduits configured to return the heated, oxygen depleted air stream from the oxygen transport membrane based

reforming reactor to the regenerative air preheater to heat the source of feed air or other oxygen containing feed stream and subsequently exhaust the cooled oxygen depleted stream.

(00045) The heated and oxygen depleted stream can optionally be introduced into a duct burner region within the return conduits which include one or more duct burners used to support combustion of a supplemental fuel stream to produce supplemental heat introduced into the continuously rotating regenerative air preheater and preheat the feed air stream. Alternatively, the duct burner may also be disposed directly in the air intake duct downstream of the heat exchanger to pre-heat the incoming feed air stream. The supplemental fuel stream can be a source of natural gas or the tail gas routed from elsewhere in the plant or a combination thereof. As described in more detail below, the preferred tail gas is typically associated with the product synthesis subsystem or hydrogen production subsystem.

(00046) The heated feed air stream is directed to the oxidant-side of the oxygen transport membrane reactor, and more particularly to the oxidant-side of the oxygen transport membrane elements or tubes within the oxygen transport membrane based reforming reactor. As the heated feed air stream flows across the oxidant-side surfaces of the oxygen transport membrane elements or tubes, oxygen ions from the heated feed air stream permeate through the oxygen transport membrane elements or tubes to the reactant side of the oxygen transport membrane elements or tubes. The oxygen ions recombine at the permeate side of the oxygen transport membrane elements or tubes and react with a hydrogen containing stream at the permeate side to create the heat and a difference in oxygen partial pressure across the oxygen transport membrane element which drives the oxygen transport.

(00047) As a result of the reactively driven oxygen ion transport across the membranes, the feed air stream becomes generally depleted of oxygen and heated by the convective heat transfer between the oxygen transport membrane elements or tubes and the passing air stream. At the high temperatures within the oxygen transport membrane based reforming reactor, approximately 70% or more of the oxygen within the feed air stream is transported or permeated across the oxygen transport membrane elements or tubes. The residual stream is thus a heated,

oxygen-depleted stream that exits the oxygen transport membrane based reforming reactor and is used to preheat the incoming feed air stream, via a ceramic regenerative air preheater. The air supply and preheat subsystem may also include a blower or fan required to convey an oxygen containing feed stream through the regenerative air preheater and the downstream oxygen transport membrane reforming reactors or converters.

OXYGEN TRANSPORT MEMBRANE BASED REFORMING REACTOR/CONVERTER

(00048) A schematic illustration of the concept behind the first embodiment of the oxygen transport membrane based reforming reactor or converter is shown in Fig. 2. As seen in Fig. 2, the oxygen transport membrane assembly comprises an oxygen transport membrane based reforming tube where secondary reforming of the coal-derived synthesis gas occurs.

(00049) The oxygen transport membrane based reforming tube has an oxidant side and a reactive side and is capable of conducting oxygen ions at an elevated operational temperature where there is a difference in partial pressure of oxygen across the membrane. The oxidant side of the oxygen transport membrane reforming tubes is preferably the exterior surface of the ceramic tubes exposed to the heated oxygen containing stream and the reactant side or permeate side is preferably the interior surface of the ceramic tubes. Within the oxygen transport membrane reforming tube is catalysts that facilitate partial oxidation and further reforming of the coal-derived synthesis gas.

(00050) The coal-derived synthesis gas stream produced by the coal gasification subsystem generally contains hydrogen, carbon monoxide, unconverted carbon species, steam, carbon dioxide and other constituents and is directed to the reactive side of the oxygen transport membrane based reforming tube. A portion of the hydrogen and carbon monoxide within the coal-derived synthesis gas reacts with the permeated oxygen on the reactive side of the oxygen transport membrane based reforming tubes to produce heat, a portion of which is used in-situ to facilitate the conversion or further reforming of the coal-derived

synthesis gas within the oxygen transport membrane based reforming tubes. In addition, a portion of the heat produced through the reaction of hydrogen with the permeated oxygen is transferred as radiant heat to adjacent process gas heating tubes.

(00051) Disposed in an adjacent or juxtaposed orientation relative to the oxygen transport membrane based reforming tube is the process gas heating tube (i.e. steam/fluid tubes). Although Fig. 2 shows a single oxygen transport membrane based reforming tube and a single process gas heating tube, there would be many of such oxygen transport membrane based reforming tubes and process gas heating tubes in each assembly or subsystem. An example of such multi-tube assembly is generally described with reference to Fig. 19 and associated detailed description in United States provisional patent application serial number 61/932,974, the entire disclosure of which is incorporated by reference herein.

(00052) The close packing arrangement of oxygen transport membrane based reforming tubes and process gas heating tubes provides for efficient heat transfer, primarily through radiation. Such arrangement is configured to prevent overheating of the system or otherwise to manage the thermal load of the oxygen transport membrane based reforming reactors or converter. This close packing arrangement also provides advantages with respect to packing density, modularization, low cost manufacturing, shop-fab modules, and scalability of oxygen transport membrane based systems described in United States provisional patent application serial number 61/932,974.

(00053) A schematic illustration of the concept behind a second embodiment of the oxygen transport membrane based reforming reactor or converter is shown in Fig. 5. In this embodiment, the heated feed stream comprising natural gas and steam first passes through primary reforming tubes, which contain conventional reforming catalysts configured to reform the natural gas based feed stream. The temperature of the reformed synthesis gas leaving the primary reforming tubes is designed to be between 650 °C and 850 °C. This reformed synthesis gas is then fed along with the coal-derived synthesis gas to the oxygen transport membrane reforming tubes that are also filled with a reforming catalyst. Alternately the

oxygen transport membrane based reforming reactor or converter can be configured as shown in Fig. 6 to introduce coal-derived synthesis gas into the process tubes loaded with reforming catalyst either separately or mixed with natural gas. The oxygen transport membrane based reforming reactor or converter 20 of Fig. 3 and Fig. 4 will contain plurality of tubes shown in Fig. 5 or Fig. 6 or combinations thereof. The oxygen from the heated intake or feed air permeates through the oxygen transport membrane tubes and reacts with a portion of the mixed synthesis gas at the reactant side of the tubes. A portion of the energy or heat generated by this reaction is used for in-situ secondary reforming of the mixed synthesis gas. The rest of the energy or heat is transferred by radiation to the primary reforming tubes to drive the primary reforming reactions and by convection to the oxygen-depleted retentate stream. The upgraded synthesis gas leaving the oxygen transport membrane reforming tubes is preferably at a temperature between about 900 °C and about 1050 °C. In other words, the endothermic heating requirements of the reforming process occurring in the primary reforming tubes is supplied through radiation of some of the heat from the oxidation reaction occurring in oxygen transport membrane reforming tubes together with the convective heat transfer provided by heated, oxygen depleted retentate stream.

(00054) The upgraded synthesis gas stream produced by the oxygen transport membrane based reforming reactor assembly or subsystem of Fig. 5 generally contains hydrogen, carbon monoxide, unconverted methane, steam, carbon dioxide and other constituents. A significant portion of the sensible heat from the upgraded synthesis gas stream can be recovered using a heat exchange section or recovery train that is designed to cool the upgraded synthesis gas stream while preheating boiler feed water as well as generating process steam. Optionally, a portion of the sensible heat may also be used to preheat the natural gas based feed stream. The resulting cooled and upgraded synthesis gas generally has a module of between about1.7 and 1.95 and a H_2/CO ratio of between about 2.5 and 4.0. This cooled and upgraded synthesis gas is suitable for use as a feed stream to the power

generation subsystem and/or the Fischer-Tropsch synthesis section, described in more detail below.

(00055) Another alternate embodiment of the oxygen transport membrane based reforming reactor assembly or subsystem is shown in Fig. 7. The embodiment shown in Fig. 7 employs the same natural gas and steam conditioning process described above with reference to Fig. 5. However, in this embodiment, the natural gas based mixed feed stream containing natural gas and steam is mixed with the coal derived synthesis gas either upstream of the oxygen transport membrane reforming reactor assembly or subsystem or as the streams enter the oxygen transport membrane reforming reactor. The combined or mixed feed stream is fed to a reactant side of a reactively driven and catalyst containing oxygen transport membrane based reforming reactor assembly, generally represented as the illustrated oxygen transport membrane tube.

(00056) As with the earlier described embodiments, the reactively driven, oxygen transport membrane based reforming reactor or assembly includes one or more oxygen transport membrane tubes each having an oxidant side and a reactant side. Each of the oxygen transport membrane tubes are configured to separate oxygen from the heated feed air stream contacting the oxidant side and transport the separated oxygen to the reactant side through oxygen ion transport. The oxygen ion transport occurs when the oxygen transport membrane tubes are subjected to elevated operational temperatures and there is a difference in oxygen partial pressure across the oxygen transport membrane elements or tubes.

(00057) A portion of the hydrogen and carbon monoxide within the combined feed stream immediately reacts with the permeated oxygen at the reactant side of the tubes to produce the difference in oxygen partial pressure across the oxygen transport membrane elements which drives the oxygen ion transport and separation. This oxidation reaction also produces reaction products and heat that is used to facilitate the in-situ reforming of the combined feed stream in the presence of the reforming catalysts within the oxygen transport membrane reforming reactor or assembly. Specifically, the oxygen transport membrane based reforming reactor is configured to reform the natural gas as well as further reform

any unconverted hydrocarbons from the coal-derived synthesis gas in the presence of the reaction products and heat to produce a synthesis gas product stream. The synthesis gas product stream leaving the oxygen transport membrane based reforming reactor is preferably at a temperature between about 900 °C and 1050 °C.

(00058) Again, a significant portion of the sensible heat from the produced synthesis gas stream can be recovered using a heat exchange section or recovery train that is designed to cool the produced synthesis gas stream while preheating boiler feed water as well as generating process steam. Optionally, the sensible heat can be used to preheat the natural gas based feed stream. The resulting cooled oxygen transport membrane derived synthesis gas generally has a module of between about 1.95 and 2.2 and a H_2/CO ratio of between about 2.7 and 4.0. This cooled oxygen transport membrane derived synthesis gas is suitable for use as a feed stream to the oxygen transport membrane based power subsystem and/or the synthesis section, described in more detail below.

(00059) As indicated above, one of the key advantages of the present systems and methods is the ability to modularize and/or scale the oxygen transport membrane based reforming reactors. In all three above-described embodiments, the oxygen transport membrane based reforming reactors are preferably arranged as sets of closely packed reforming tubes in close proximity to one another and in close proximity to the process gas heating tubes or primary reforming tubes, as the case may be. Such arrangement is generally shown and described in United States provisional patent application serial numbers 61/887,751; 61/932,974 and 61/888,327 which are incorporated by reference herein.

SYNTHESIS GAS CONDITIONING SUBSYSTEM

(00060) Like many IGCC systems, the present oxygen transport membrane enhanced IGCC system and process may include a water-gas shift reactor to generate additional hydrogen and carbon dioxide via the Water Gas Shift reaction:

$CO + H_2O \rightarrow CO_2 + H_2$

(00061) Since the Water Gas Shift reaction is exothermic, the shifted synthesis gas leaves the shift reactor at a temperature greater than the directly

cooled synthesis gas, and preferably at a temperature of around 435°C. A portion of the sensible energy in this shifted stream is preferably recovered by preheating or reheating boiler feed water or by preheating the natural gas and hydrogen feed stream. Although not shown, a portion of the shifted synthesis stream may be recycled back to the oxygen transport membrane feed streams to adjust the H_2/CO of the synthesis gas feed. The shifted synthesis gas is then directed to the acid gas removal (AGR) process to strip carbon dioxide from the shifted synthesis gas.

(00062) The illustrated AGR process is the Selexol™ process commercially offered by UOP, LLC, a solvent generally comprising a mixture of the dimethyl ethers of polyethylene glycol dissolves or absorbs the acid gases such as carbon dioxide from the conditioned synthetic gas at relatively high pressure, usually about 300 psia to 1000 psia. The rich solvent containing the carbon dioxide gas is then stripped to release and recover the carbon dioxide gas. The stripped carbon dioxide gas is directed to a carbon purification unit (CPU) while the remaining hydrogen-rich gas effluent is directed to the IGCC power generation subsystem. The preferred Selexol™ process is preferred for the present oxygen transport membrane enhanced IGCC process as it provides good selectivity for carbon dioxide over hydrogen contained within the synthesis gas and minimizes the need for hydrogen purification.

(00063) The CPU subsystem 141, 341 or 441 is configured to purify the carbon dioxide containing effluent stream and produce a purified carbon dioxide-rich stream suitable for carbon dioxide capture and storage/sequestration (CCS) processing or direct use in processes such as enhanced oil recovery. In the illustrated embodiment, the CPU subsystem first compresses the carbon dioxide-rich effluent stream to roughly 375 psia in a multi-stage compression train. The compressed carbon-dioxide-rich stream is dried in a carbon dioxide dryer which is adapted to remove excess moisture and water through a temperature swing adsorption process thereby preventing or reducing corrosion of the gas handling components. The CPU subsystem also is configured to remove undesirable impurities such as mercury and selected acids from the carbon dioxide-rich stream and may also include an auto-refrigerative process for inert removal. A typical

auto-refrigerative process purifies the carbon dioxide stream to about 95% or greater purity with 97% recovery of carbon dioxide. This cryogenic based process also produces a vent stream which is enriched in atmospheric gases (e.g., N_2, O_2, Ar). The purified carbon dioxide-rich effluent stream is then further compressed to about 2000 psia.

POWER GENERATION SUBSYSTEM

(00064) The illustrated IGCC type power generation subsystems 151, 351 or 451 shown in Figs. 1, 3 and 4, respectively provide an arrangement that supply electric power from both a hydrogen fueled gas turbine or hydrogen-rich gas fueled turbine and from steam turbine generators, as is known by those skilled in the art. An additional source of electric power is also generated in the oxygen transport membrane enhanced IGCC system as a result of the expansion of the coal-derived synthesis gas to the low to moderate pressures required by the oxygen transport membrane based reforming reactor or converter.

(00065) In the illustrated embodiments, the produced synthesis gas is cooled, cleaned and conditioned into a hydrogen-rich gaseous fuel that is directed to a suitable gas turbine. Gas turbines available from manufacturers like GE and Siemens typically need only minor modifications to use a hydrogen-rich synthesis gas as the fuel while further changes or modifications may be required to the gas turbine where hydrogen fuel is the preferred choice of fuel. Most of the sensible heat in the hot gas turbine exhaust gas is recovered in the heat recovery steam generator (HRSG) where it produces steam that drives a steam turbine in a manner or arrangement well known to those persons skilled in the art.

(00066) While the performance and overall efficiency of the synthesis gas fueled or hydrogen fueled gas turbine may be lower than comparable natural gas fueled gas turbines due to the low heating values of synthesis gas based fuels and associated temperature limitations in the synthesis gas fueled gas turbines, the environmental advantages of the IGCC powerplant are notable. Such advantages of the IGCC system or powerplant include the ability to capture and sequester carbon dioxide (i.e. CCS enabled). In addition, like other IGCC powerplants, the

oxygen transport membrane enhanced IGCC system or powerplant produces very low levels of NOx, SO_2, particulates, and volatile mercury as the emission-forming constituents from the synthesis gas are removed prior to combustion in the IGCC power generation subsystem.

LIQUID/FUEL PRODUCT SYNTHESIS SECTION

(00067) Turning back to Fig. 4, the present oxygen transport membrane enhanced IGCC system and associated methods contemplate the production or synthesis of selected liquid/fuel co-products such as Fischer-Tropsch synthetic fuels or hydrogen.

(00068) Where the liquid/fuel product synthesis is a Fischer-Tropsch gas to liquid (GTL) synthesis process, the combined synthesis gas stream is synthesized into selected liquid hydrocarbon products in a Fischer-Tropsch catalyst based reactor (e.g. fixed bed reactor, slurry phase reactor, or synthol reactor) and subsequently purified into a final liquid hydrocarbon product in a manner generally known to those skilled in the art. The liquid hydrocarbon product generally produced by the Fischer-Tropsch gas to liquid (GTL) synthesis process heavily depends on temperature, catalyst, pressure and, more importantly, the synthesis gas composition.

(00069) For example, at high temperature Fischer-Tropsch reactions (i.e. 330°C - 350°C) the liquid hydrocarbon product predominantly comprises gasoline and light olefins whereas at low temperature Fischer-Tropsch reactions (i.e. 220°C - 250°C) the liquid hydrocarbon product predominantly comprises distillates and waxes, with some gasoline. Catalysts used in many Fischer-Tropsch gas to liquid (GTL) synthesis processes include cobalt-based catalysts or iron-based catalysts. The synthesis gas composition, and in particular, the ratio of hydrogen to carbon monoxide (H_2/CO ratio) is an important variable that affects the Fischer-Tropsch gas to liquid (GTL) synthesis process one that can be controlled by aspects and features of the present invention. For FT reactors using iron-based catalyst, the target H2/CO ratio is around 1:1. For FT reactors using cobalt-based catalyst, the preferred embodiment for this invention, the target H2/CO ratio is around 2:1. The

FT synthesis section also generates a tail gas comprising unconverted CO & H2, H2O as well as light hydrocarbons such as methane and/or C2 – C5 hydrocarbons. All or a portion of the FT tail gas may be recycled back to the oxygen transport membrane based reforming subsystem or can be used as a supplemental fuel source for the duct burner in the air intake subsystem.

(00070) Where the desired liquid/fuel product is hydrogen, the mixed stream of synthesis gas can be processed to produce a hydrogen gas product via a hydrogen product swing adsorption (PSA) process or via hydrogen membrane separation, as generally known to those skilled in the art. For example, in the hydrogen PSA based process, the mixed synthesis gas stream is first subjected to a water gas shift reaction, subsequently cooled and directed to a hydrogen pressure swing adsorption (PSA) unit which produces a higher purity hydrogen stream while the carbon oxides, methane and other impurities are rejected as a tail gas. When integrated with the embodiments of the present systems and methods, the hydrogen PSA tail gas may be recycled to use with the duct burners or other sections associated with the oxygen transport membrane based reforming subsystem while a portion of the hydrogen gas may be diverted and mixed with the natural gas feed prior to desulfurization to produce the natural gas based feed stream. Similarly, where hydrogen membrane separation process is used, a portion of the hydrogen can be used to condition the feed streams or used as a supplemental fuel source in the oxygen transport membrane based reforming subsystem.

Comparative Examples

(00071) In Tables 1 and 2, a Base Case analysis is provided in the designated column. The base case is a coal-only case, with the coal-derived synthesis gas obtained from a system generally described in the U.S. Department of Energy's "Cost and Performance Baseline for Fossil Energy Plants".

(00072) Table 1 compares the Base Case against a coal-only case of the present IGCC system with the oxygen transport membrane (OTM) based reforming reactor or converter as shown and described with reference to Fig. 1 and Fig. 2, referred to in Table 1 as Case 2. In Case 2, the specific oxygen is reduced to the

gasifier and the coal split is adjusted between the two stages. Due to the reduced temperature of the second stage in the gasifier, the methane slip increases significantly in this case. Through the addition of the oxygen transport membrane based reforming reactor of converter to the cycle, additional non-cryogenically produced oxygen is provided to the coal-derived synthesis gas stream and a significant portion of the methane slip is reacted in the secondary reforming step to liberate carbon monoxide and hydrogen which is convertible to power with carbon dioxide capture.

(00073) When comparing the Base Case with the Case 2, the present IGCC system with the oxygen transport membrane based reforming reactor or converter provides the following benefits and advantages :

(00074) For the same overall specific oxygen, roughly 90% is cryogenically produced and 10% is provided by through the oxygen transport membrane elements. Relative to a unit of hydrogen available to the gas turbines, the cryogenically produced oxygen is reduced by about 30% versus the Base Case. This results in a large reduction in parasitic power to operate the air separation unit (ASU), and more power available as useful plant output.

(00075) The corresponding carbon (in the coal) conversion to carbon monoxide increases from about 60% in the Base Case to about 75% in the oxygen transport membrane based reforming reactor or converter case. This increase in carbon monoxide represents more opportunity for hydrogen fuel to the gas turbines, and less carbon dioxide or unreacted methane passing through to capture. In fact, the methane slip is reduced by over 90% from the reduced-oxygen gasifier synthesis gas and about 85% from the Base Case synthesis gas. In addition, there is an increase in synthesis gas CO/CO_2 ratio of about 70%. With the increase in carbon conversion to carbon monoxide and the resultant increase in hydrogen available to the gas turbines per unit of carbon input, there is an overall 20% reduction of carbon dioxide produced by the powerplant with an oxygen transport membrane based converter.

	Base Case	Case 2	
	IGCC	IGCC w/OTM Converter	
	Gasifier Out	Gasifier Out	OTM Out
% Heating Value from NG	0.0%	0.0%	
scf NG/lb Dry Coal	0.0	0.0	
Pressure (bar abs)	43	43	43
O_2/C Ratio	0.46	0.41	0.46
H_2O/C Ratio	0.68	0.68	0.68
CO/CO_2 Ratio	1.90	1.60	3.20
H_2/CO Ratio	0.91	0.88	0.92
C to CO Conversion	60%	52%	75%
H_2 Fuel/Unit Carbon In	1.13	0.98	1.44
C Converted/Unit Carbon In	80%	75%	87%
Cryo O_2 /Total O_2	100%	90%	10%
CO_2 / Unit H_2 Fuel	0.41	0.42	0.21
CO_2 Produced $CO_2/CO_{2\ base}$	100%	116%	79%
Fischer-Tropsch Adjustment	0.64	0.63	0.64
N_2 (Vol %)	3.4	3.7	3.2
O_2 (Vol %)	0.0	0.0	0.0
H_2 (Vol %)	27.1	24.6	32.3
H_2O (Vol %)	19.1	18.0	17.8
CO (Vol %)	30.0	27.9	35.1
CO_2 (Vol %)	15.8	17.5	11.0
CH_4 (Vol %)	4.6	8.2	0.7

Table 1

(00076) Table 2 compares the Base Case against the embodiment of the present oxygen transport membrane enhanced IGCC system using coal and natural gas with the oxygen transport membrane based reforming reactor or converter as shown and described with reference to Fig. 3, referred to in Table 2 as Case 3. In Case 3, natural gas is supplied such that it comprises approximately 50% of the fuel heating value to the IGCC oxygen transport membrane enhanced plant. Table 2 also compares the Base Case to the oxygen transport membrane enhanced IGCC system configured to support co-product generation, and in particular Fischer-Tropsch synthesis, shown and described with reference to Fig. 4, and is referred to as Case 4.

(00077) The oxygen transport membrane enhanced IGCC system with both coal and natural gas feeds and the oxygen transport membrane based reforming reactor provides significant advantages when compared to the Base Case. For example, the methane slip in both Case 3 and Case 4 is reduced by over 90% from the methane slip in the Case 2 synthesis gas, and about 85% from the methane slip in the Base Case synthesis gas. With respect to specific oxygen input for Case 3, about 50% of the oxygen is cryogenically-derived while about 50% is provided by through oxygen transport membranes. Relative to a unit of hydrogen available to the gas turbines, the cryogenically produced oxygen is reduced by 65% versus the base case. This results in a large reduction in parasitic power to operate the ASU, and more power available as useful plant output. In addition, the capacity of the ASU can be dramatically reduced which results in a capital cost savings compared to the Base Case.

(00078) Also, the hydrogen available as a fuel to the gas turbine relative to a unit of carbon input increases from about 1.13 in the Base Case to about 1.86 in Case 3. This represents an increase of 43% over the Base Case and 30% increase over Case 2. This hydrogen fuel increase represents a progressively lower carbon input required for the same required power for the plant. Put another way, there is roughly a 40% reduction in carbon dioxide produced for Case 3 versus the Base Case.

(00079) In Case 4, when the upgraded or combined synthesis gas is specifically adapted to achieve the desired characteristics to support Fischer-Tropsch synthesis, there is a slight loss of efficiency. In the Base Case, only 64% of the synthesis gas produced can be adjusted to achieve the desired ratio. The remaining 36% is preferably used to provide the hydrogen input for the ratio adjustment. For Case 2 (See Table 1) this efficiency does not improve because it is restricted to the inherent hydrogen-to-carbon ratio of the fuel and H_2O/carbon ratio of the conversion.

(00080) However, with the addition of natural gas (e.g. about 50% by heating value) as suggested in Case 3, the efficiency for downstream Fischer-Tropsch synthesis can be increased to about 87%. By further increasing the natural

gas feed or input to approximately 70% by heating value as suggested by Case 4, no hydrogen adjustment is required, and 100% of the produced synthesis gas may be used for Fischer-Tropsch synthesis.

	Base Case	**Case 3**		**Case 4**	
	IGCC	IGCC w/Natural Gas		IGCC w/Natural Gas	
	Gasifier Out	Gasifier Out	OTM Out	Gasifier Out	OTM Out
% HeatingValue from NG	0.0%	49.9%		70.6%	
scf NG/lb Dry Coal	0.0	13.6		32.8	
Pressure (bar abs)	43	43	30	43	30
O_2/C Ratio	0.46	0.41	0.51	0.41	0.54
H_2O/C Ratio	0.68	0.68	0.99	0.68	1.17
CO/CO_2 Ratio	1.90	1.60	2.65	1.60	2.50
H_2/CO Ratio	0.91	0.88	1.60	0.88	2.00
C to CO Conversion	60%	52%	71%	52%	70%
H_2 Fuel/Unit Carbon In	1.13	0.98	1.86	0.98	2.10
C Converted/Unit Carbon In	80%	75%	87%	75%	87%
Cryo O_2 /Total O_2	100%	50%	50%	31%	69%
CO_2 / Unit H_2 Fuel	0.41	0.42	0.14	0.42	0.08
CO_2 Produced (vs Base)	100%	116%	61%	116%	54%
FT Adjustment	0.64	0.63	0.87	0.63	1.00
N_2 (Vol %)	3.4	3.7	1.6	3.7	1.1
O_2 (Vol %)	0.0	0.0	0.0	0.0	0.0
H_2 (Vol %)	27.1	24.6	38.8	24.6	40.9
H_2O (Vol %)	19.1	18.0	25.7	18.0	28.8
CO (Vol %)	30.0	27.9	24.2	27.9	20.5
CO_2 (Vol %)	15.8	17.5	9.1	17.5	8.2
CH_4 (Vol %)	4.6	8.2	0.6	8.2	0.5

Table 2

(00081) While the inventions herein disclosed have been described by means of specific embodiments and processes associated therewith, numerous modifications and variations can be made thereto by those skilled in the art without departing from the scope of the invention as set forth in the appended claims or sacrificing all of its features and advantages.

We claim:

1. An oxygen transport membrane based hydrogen-rich fuel gas production system comprising:

a coal gasification subsystem configured to produce a coal-derived synthesis gas stream from a source of coal, steam and a first oxygen stream;

an oxygen transport membrane based conversion subsystem configured to treat the coal-derived synthesis gas stream with at least a second oxygen stream to form a hydrogen-rich effluent stream;

a gas conditioning subsystem configured to treat the hydrogen-rich effluent stream to produce the hydrogen-rich fuel gas;

wherein the first oxygen stream is provided by separation of oxygen from air at cryogenic temperatures and the second oxygen stream is provided by separation of oxygen from air at elevated temperatures within the oxygen transport membrane based conversion subsystem; and

wherein the mass of the second oxygen stream divided by the total mass of the first and second oxygen streams is in the range of 0.1 to 0.7.

2. The system of claim 1 wherein the hydrogen-rich fuel gas is provided as a fuel to a gas turbine to generate electricity.

3. The system of claim 1 wherein the hydrogen-rich fuel gas is divided into at least a first portion and a second portion, the first portion provided to a gas turbine to generate electricity, and the second portion provided as a source of hydrogen in other industrial applications.

4. The system of claim 1 wherein the gas conditioning subsystem produces a carbon dioxide rich stream and the hydrogen-rich fuel gas.

5. The system of claim 2 wherein a nitrogen rich stream formed while separating oxygen from air at cryogenic temperature is provided to the gas turbine as a diluent.

6. An oxygen transport membrane based power generation system comprising:

a coal gasification subsystem configured to produce a coal-derived synthesis gas stream from a source of coal, steam and a first oxygen stream;

an oxygen transport membrane based conversion subsystem configured to treat the coal-derived synthesis gas stream and a hydrocarbon feed stream with at least a second oxygen stream to form a hydrogen-rich effluent stream;

wherein the oxygen transport membrane based conversion subsystem further comprises a combined reforming reactor configured to react the hydrocarbon containing feed stream and steam to form a hydrocarbon-derived synthesis gas stream that is combined with the coal-derived synthesis gas stream;

a gas conditioning subsystem configured to treat the hydrogen-rich effluent stream to provide a hydrogen-rich fuel gas to a gas turbine;

wherein the first oxygen stream is provided from a source that separates oxygen from air at cryogenic temperature and the second oxygen stream is provided by separation of oxygen from air at elevated temperature within the oxygen transport membrane based conversion subsystem; and

wherein the coal-derived synthesis gas stream input into the oxygen transport membrane based conversion system contains at least 5.0 volume % hydrocarbons and the hydrogen-rich effluent stream contains less than about 2.0 volume % hydrocarbons.

7. The system of claim 6 wherein the hydrogen-rich effluent stream is divided into at least a first portion and a second portion, the first portion provided to the gas conditioning subsystem, and the second portion provided to make liquid fuel and/or chemicals.

8. The system of claim 7 wherein a hydrogen containing stream derived from making of liquid fuel is introduced into the oxygen transport membrane based conversion subsystem to facilitate the treatment of coal-derived synthesis gas.

9. The system of claim 6 wherein the gas conditioning subsystem produces a carbon dioxide rich stream and the hydrogen-rich fuel gas.

10. The system of claim 6 wherein a nitrogen rich stream formed while separating oxygen from air at cryogenic temperature is provided to the gas turbine as a diluent.

11. An oxygen transport membrane based co-products system comprising:

a coal gasification subsystem configured to produce a coal-derived synthesis gas stream from a source of coal, steam and a first oxygen stream;

an oxygen transport membrane based conversion subsystem configured to treat the coal-derived synthesis gas stream, a hydrocarbon containing feed stream and optionally a steam stream with at least a second oxygen stream to form a hydrogen-rich effluent stream;

a gas conditioning subsystem configured to treat the hydrogen-rich effluent stream to provide a hydrogen-rich fuel gas;

a gas turbine system configured to combust hydrogen-rich fuel gas and generate electricity;

wherein the first oxygen stream is provided from a source that separates oxygen from air at cryogenic temperature and the second oxygen stream is provided by separation of oxygen from air at elevated temperature within the oxygen transport membrane based conversion subsystem; and

wherein the coal-derived synthesis gas stream treated in the oxygen transport membrane based conversion system contains at least 1.0 volume % hydrocarbons.

12. The system of claim 11 wherein the hydrogen-rich effluent stream is divided into at least a first portion and a second portion, the first portion provided to the gas conditioning subsystem, and the second portion provided to make liquid fuel and/or chemicals.

13. The system of claim 11 wherein a hydrogen containing stream derived from making of liquid fuel is introduced into the oxygen transport membrane based conversion subsystem to facilitate the treatment of coal-derived synthesis gas.

14. The system of claim 11 wherein the gas conditioning subsystem produces a carbon dioxide rich stream and the hydrogen-rich fuel gas.

15. A method for producing a hydrogen-rich fuel gas comprising the steps of:

producing a stream of coal-derived synthesis gas from a source of coal, steam and a first oxygen stream;

oxidizing a portion of the hydrogen and carbon monoxide from the coal-derived synthesis gas stream with a second oxygen stream produced in a reactively driven oxygen transport membrane based converter to produce reaction products and heat;

converting or reforming the coal-derived synthesis gas in the presence of the heat, the reaction products and a reforming catalyst contained within the oxygen transport membrane based converter to produce a hydrogen-rich synthesis gas stream; and

conditioning the hydrogen-rich synthesis gas stream to produce the hydrogen-rich fuel gas;

wherein the first oxygen stream is provided by separation of oxygen from air at cryogenic temperatures and the second oxygen stream is

provided by separation of oxygen from air at elevated temperatures within the oxygen transport membrane based converter; and

wherein the mass of the second oxygen stream divided by the total mass of the first and second oxygen streams is in the range of 0.1 to 0.7.

16. The method of claim 15 wherein the coal-derived synthesis gas stream input into the oxygen transport membrane based converter contains at least 5.0 volume % hydrocarbons and the hydrogen-rich synthesis gas stream contains less than about 2.0 volume % hydrocarbons.

17. A method for producing a hydrogen-rich fuel gas comprising the steps of:

producing a stream of coal-derived synthesis gas from a source of coal, steam and a first oxygen stream;

producing a stream of natural gas derived synthesis gas from a source of natural gas, steam in the presence of a reforming catalyst and radiant heat;

oxidizing a portion of the hydrogen and carbon monoxide from the synthesis gas streams with a second oxygen stream produced in a reactively driven oxygen transport membrane based converter to produce reaction products and heat, including the radiant heat;

converting or further reforming unconverted hydrocarbons in the synthesis gas streams in the presence of the heat, the reaction products and a reforming catalyst contained within the oxygen transport membrane based converter to produce a hydrogen-rich synthesis gas stream; and

conditioning the hydrogen-rich synthesis gas stream to produce the hydrogen-rich fuel gas;

wherein the first oxygen stream is provided by separation of oxygen from air at cryogenic temperatures and the second oxygen stream is provided by separation of oxygen from air at elevated temperatures within the oxygen transport membrane based converter; and

wherein the mass of the second oxygen stream divided by the total mass of the first and second oxygen streams is in the range of 0.1 to 0.7.

18. The method of claim 17 wherein the coal-derived synthesis gas stream input into the oxygen transport membrane based converter contains at least 5.0 volume % hydrocarbons and the hydrogen-rich synthesis gas stream contains less than about 2.0 volume % hydrocarbons.

19. A method for producing a hydrogen-rich fuel gas comprising the steps of:

producing a stream of coal-derived synthesis gas from a source of coal, steam and a first oxygen stream;

combining the coal-derived synthesis gas with a source of natural gas and steam and directing the combined stream to a reactively driven oxygen transport membrane based reforming reactor or converter;

oxidizing a portion of the hydrogen and carbon monoxide from the combined stream with a second oxygen stream produced in the reactively driven oxygen transport membrane based reforming reactor or converter to produce reaction products and heat,

converting or further reforming unconverted hydrocarbons in the coal-derived synthesis gas and hydrocarbons in the natural gas in the presence of the heat, the reaction products, the steam and a reforming catalyst contained within the oxygen transport membrane based reforming reactor or converter to produce a hydrogen-rich synthesis gas stream; and

conditioning the hydrogen-rich synthesis gas stream to produce the hydrogen-rich fuel gas;

wherein the first oxygen stream is provided by separation of oxygen from air at cryogenic temperatures and the second oxygen stream is provided by separation of oxygen from air at elevated temperatures within the oxygen transport membrane based converter; and

wherein the mass of the second oxygen stream divided by the total mass of the first and second oxygen streams is in the range of 0.1 to 0.7.

20. The method of claim 5 wherein the coal-derived synthesis gas stream contains at least 5.0 volume % hydrocarbons and the hydrogen-rich synthesis gas stream contains less than about 2.0 volume % hydrocarbons.

21. An oxygen transport membrane based converter assembly comprising:

an oxygen transport membrane element having an oxidant side and a reactive side, the oxygen transport membrane element configured to transport oxygen ions at an elevated operational temperature where there is a difference in partial pressure of oxygen across the membrane element;

a source of low pressure feed air in fluid communication with the oxidant side of the oxygen transport membrane element;

a source of coal-derived synthesis gas in fluid communication with the reactive side of the oxygen transport membrane element; and

a catalyst disposed at or proximate to the reactive side of the oxygen transport membrane element;

wherein oxygen from the feed air permeates through the oxygen transport membrane element and reacts with a portion of the coal-derived synthesis gas at the reactant side of the oxygen transport membrane element to produce reaction products and heat;

wherein the oxygen transport membrane based converter assembly is further configured to reform or convert unconverted hydrocarbons in the coal-derived synthesis gas in the presence of the reaction products, a portion of the heat and the catalyst to produce an upgraded synthesis gas; and

wherein the oxygen transport membrane based converter assembly is further configured to transfer a portion of the heat by radiation to an adjacent reactor or an adjacent process gas heater.

22. An oxygen transport membrane based reforming reactor assembly comprising

an oxygen transport membrane element having an oxidant side and a reactive side, the oxygen transport membrane element configured to transport oxygen ions at an elevated operational temperature where there is a difference in partial pressure of oxygen across the membrane element;

a source of low pressure feed air in fluid communication with the oxidant side of the oxygen transport membrane element;

a source of coal-derived synthesis gas in fluid communication with the reactive side of the oxygen transport membrane element;

a source of natural gas and steam in fluid communication with the reactive side of the oxygen transport membrane element; and

a reforming catalyst disposed at or proximate to the reactive side of the oxygen transport membrane element;

wherein oxygen from the feed air permeates through the oxygen transport membrane element and reacts with a portion of the coal-derived synthesis gas at the reactant side of the oxygen transport membrane element to produce reaction products and heat;

wherein the oxygen transport membrane based reforming reactor assembly is further configured to reform unconverted hydrocarbons in the coal-derived synthesis gas and natural gas in the presence of the steam, a portion of the heat and the catalyst to produce a hydrogen-rich synthesis gas.

23. An oxygen transport membrane based reforming reactor assembly comprising:

a primary reforming reactor configured to reform a source of natural gas and steam in the presence of a reforming catalyst and radiant heat to produce a natural gas based synthesis gas stream;

an oxygen transport membrane element disposed adjacent to the primary reforming reactor, the oxygen transport membrane element having an oxidant side and a catalyst containing reactive side, the oxygen transport membrane element configured to transport oxygen ions at an elevated

operational temperature where there is a difference in partial pressure of oxygen across the membrane element;

a source of low pressure feed air in fluid communication with the oxidant side of the oxygen transport membrane element;

a source of coal-derived synthesis gas stream in fluid communication with the reactive side of the oxygen transport membrane element; and

a conduit for directing the natural gas based synthesis gas to the reactive side of the oxygen transport membrane element;

wherein oxygen from the feed air permeates through the oxygen transport membrane element and reacts with a portion of the synthesis gas streams at the reactant side of the oxygen transport membrane element to produce reaction products and heat, including the radiant heat used by the primary reforming reactor to produce the natural gas based synthesis gas;

wherein the oxygen transport membrane based reforming reactor assembly is further configured to reform unconverted hydrocarbons in the coal-derived synthesis gas and in the natural gas in the presence of the steam, a portion of the heat and the catalyst to produce a hydrogen-rich synthesis gas.

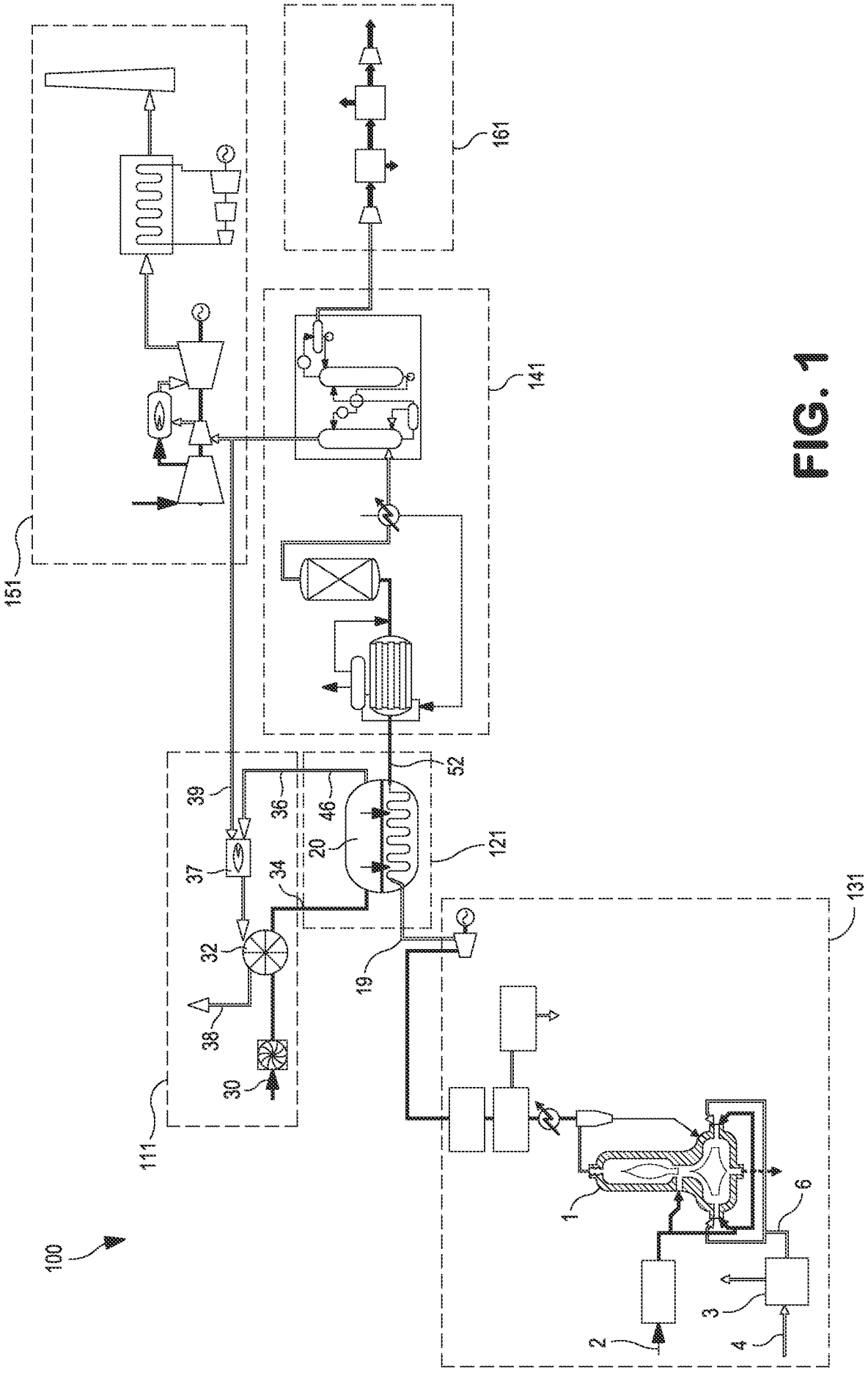

FIG. 1

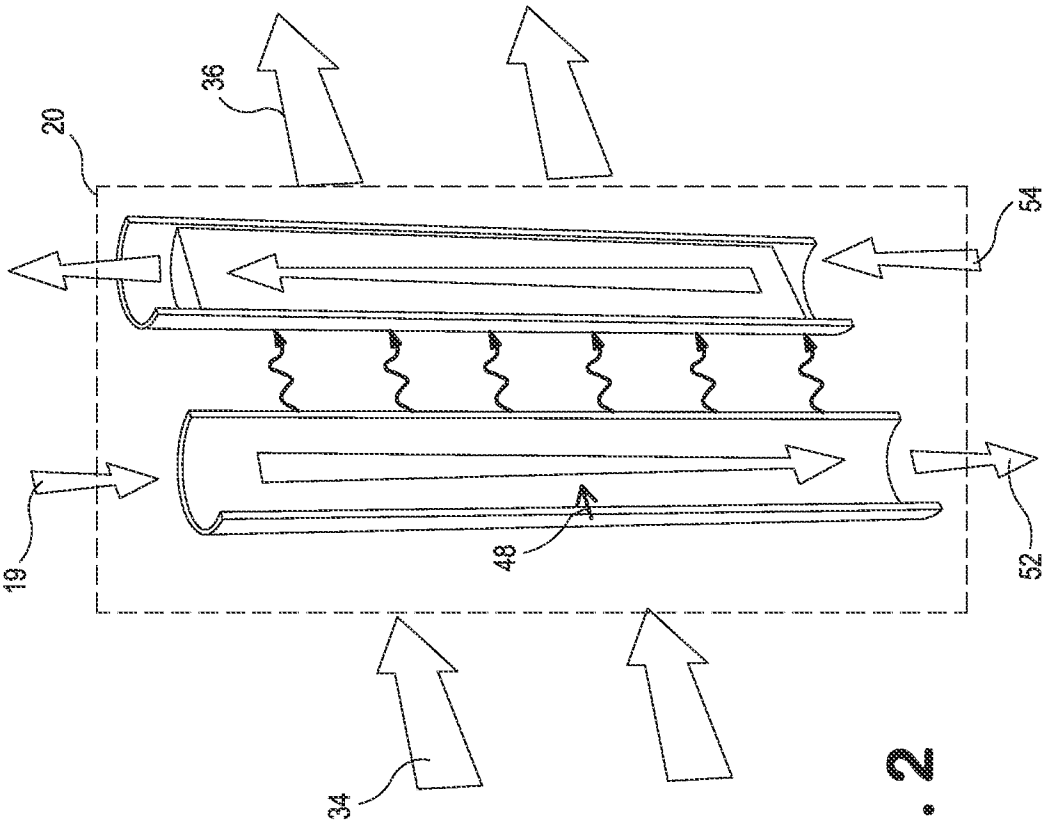

FIG. 2

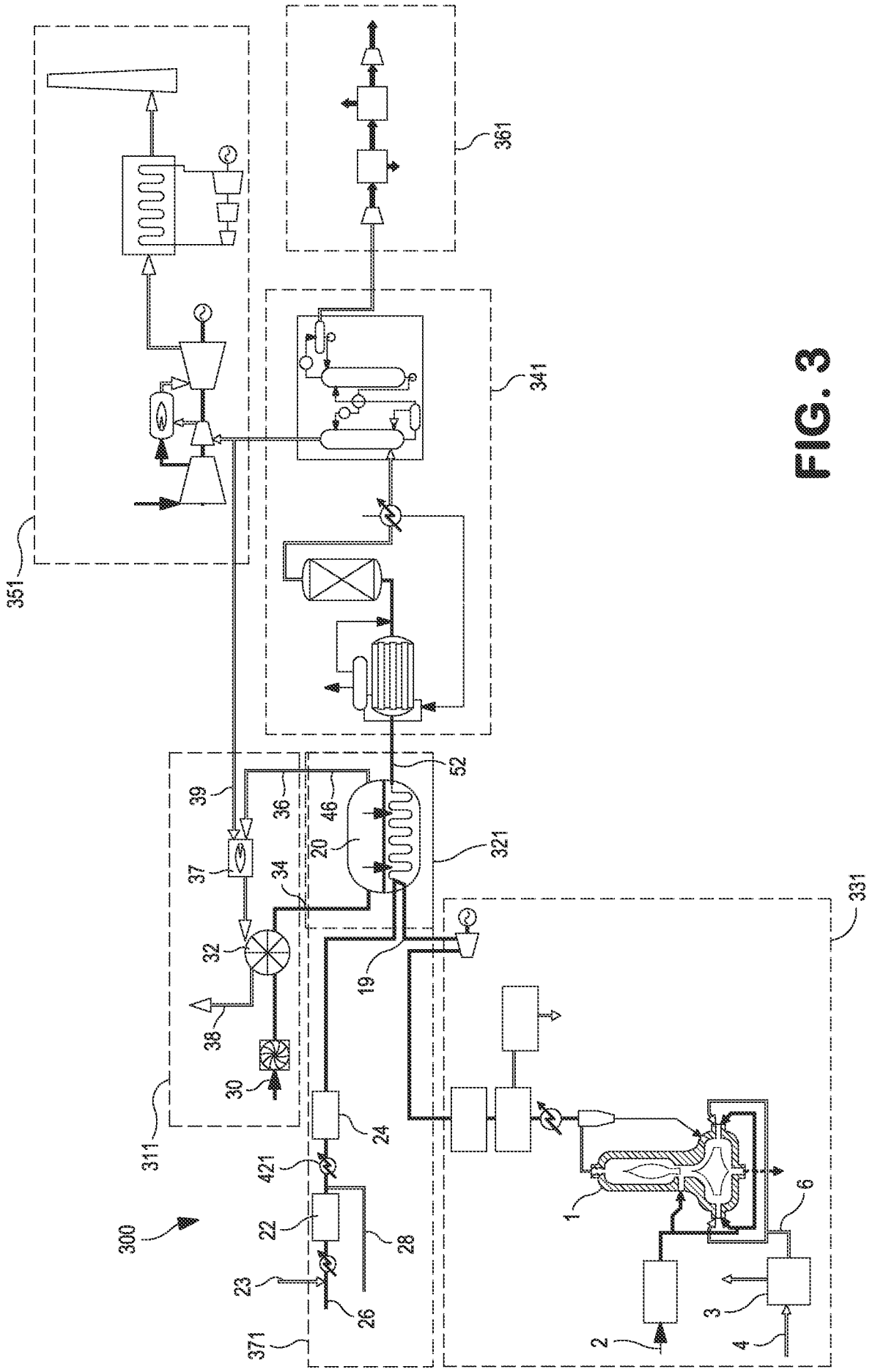
351
361
341
39
36
46
52
37
20
321
34
331
32
19
38
30
311
24
421
22
28
300
23
26
371
1
6
2
3
4

FIG. 3

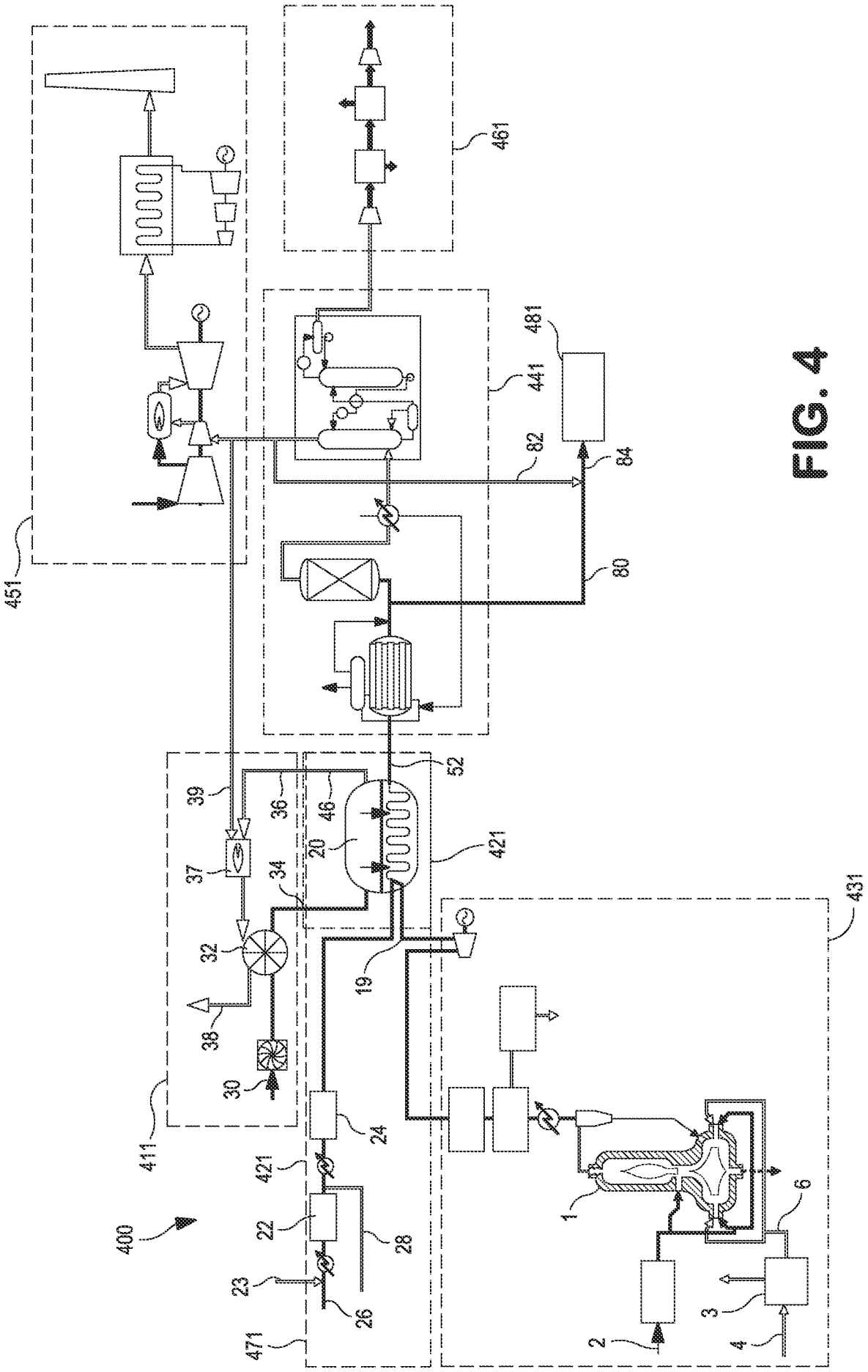
400
411
421
431
441
451
461
471
481
1
2
3
4
6
19
20
22
23
24
26
28
30
32
34
36
37
38
39
46
52
80
82
84

FIG. 4

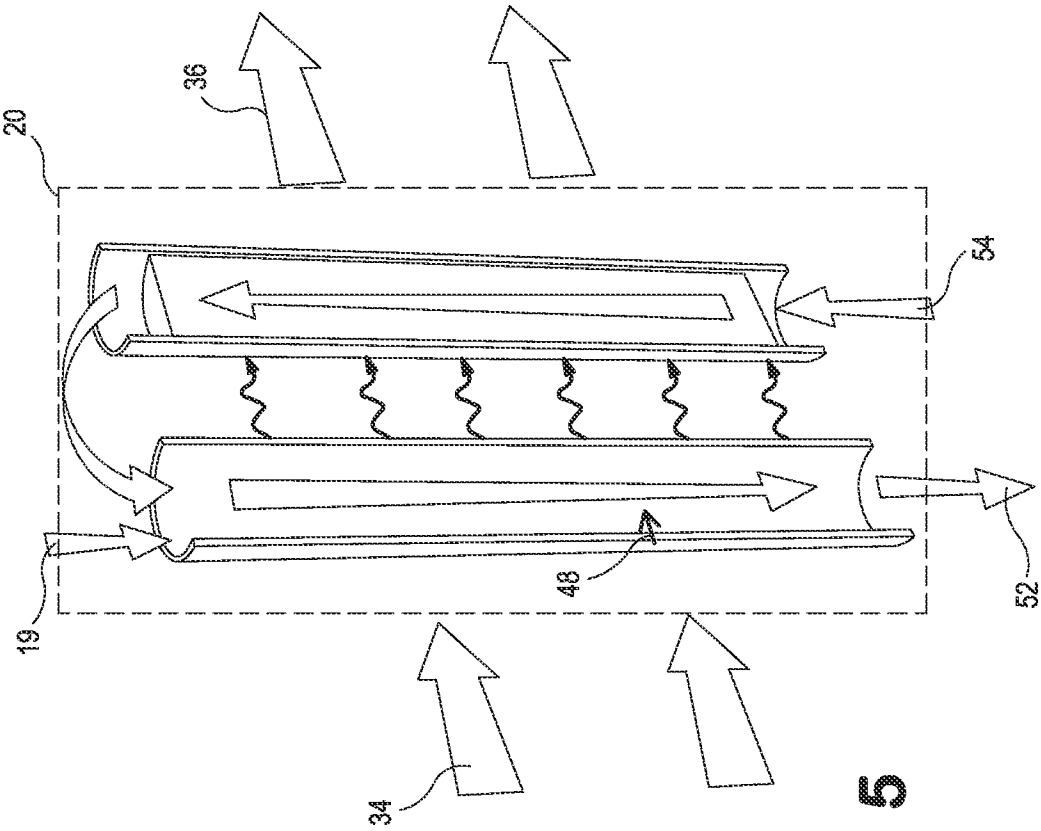

FIG. 5

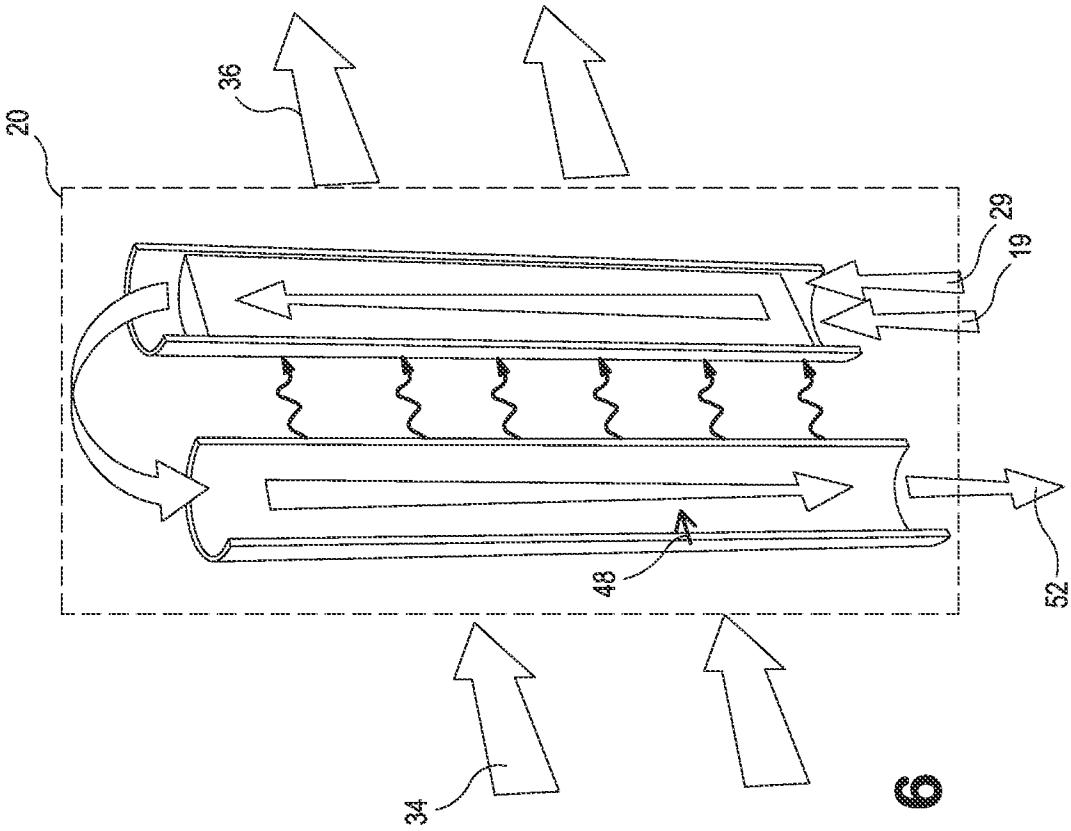

FIG. 6

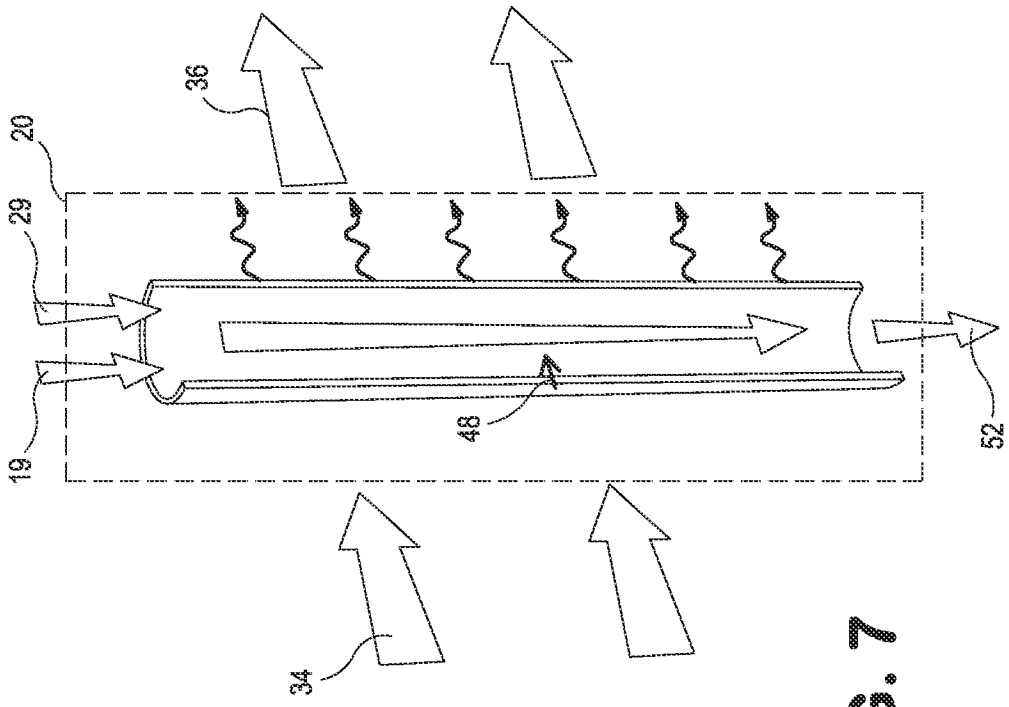

FIG. 7

INTERNATIONAL SEARCH REPORT

International application No
PCT/US2015/025052

A. CLASSIFICATION OF SUBJECT MATTER
INV. C01B3/38 C01B3/48 C01B13/02 C10J3/06 F01K23/06
ADD.

According to International Patent Classification (IPC) or to both national classification and IPC

B. FIELDS SEARCHED

Minimum documentation searched (classification system followed by classification symbols)
C01B C10J F01K

Documentation searched other than minimum documentation to the extent that such documents are included in the fields searched

Electronic data base consulted during the international search (name of data base and, where practicable, search terms used)
EPO-Internal

C. DOCUMENTS CONSIDERED TO BE RELEVANT

Category*	Citation of document, with indication, where appropriate, of the relevant passages	Relevant to claim No.
X Y	US 2008/141672 A1 (SHAH MINISH MAHENDRA [US] ET AL) 19 June 2008 (2008-06-19) abstract figure 3 paragraphs [0001], [0004], [0029], [0035], [0037], [0038], [0040], [0048], [0052] - [0054] table 4 -----	21-23 1-20
X	US 2013/009102 A1 (KELLY SEAN M [US] ET AL) 10 January 2013 (2013-01-10) abstract figure 1 paragraphs [0038] - [0045], [0074] - [0076] -----	21-23

-/--

[X] Further documents are listed in the continuation of Box C.

[X] See patent family annex.

* Special categories of cited documents :

"A" document defining the general state of the art which is not considered to be of particular relevance

"E" earlier application or patent but published on or after the international filing date

"L" document which may throw doubts on priority claim(s) or which is cited to establish the publication date of another citation or other special reason (as specified)

"O" document referring to an oral disclosure, use, exhibition or other means

"P" document published prior to the international filing date but later than the priority date claimed

"T" later document published after the international filing date or priority date and not in conflict with the application but cited to understand the principle or theory underlying the invention

"X" document of particular relevance; the claimed invention cannot be considered novel or cannot be considered to involve an inventive step when the document is taken alone

"Y" document of particular relevance; the claimed invention cannot be considered to involve an inventive step when the document is combined with one or more other such documents, such combination being obvious to a person skilled in the art

"&" document member of the same patent family

Date of the actual completion of the international search	Date of mailing of the international search report
14 July 2015	29/07/2015

Name and mailing address of the ISA/	Authorized officer
European Patent Office, P.B. 5818 Patentlaan 2 NL - 2280 HV Rijswijk Tel. (+31-70) 340-2040, Fax: (+31-70) 340-3016	Alvarez Rodriguez, C

1

Form PCT/ISA/210 (second sheet) (April 2005)

International application No
PCT/US2015/025052

C(Continuation). DOCUMENTS CONSIDERED TO BE RELEVANT

Category*	Citation of document, with indication, where appropriate, of the relevant passages	Relevant to claim No.
X	US 6 048 472 A (NATARAJ SHANKAR [US] ET AL) 11 April 2000 (2000-04-11)	21-23
Y	abstract figures 1, 2	1-20

Y	WO 2007/092844 A2 (ELTRON RESEARCH INC [US]; MUNDSCHAU MICHAEL [US]; XIE XIAOBING [US]; E) 16 August 2007 (2007-08-16) figure 2 page 9, line 30 - page 10, line 14	17-20

X	US 6 114 400 A (NATARAJ SHANKAR [US] ET AL) 5 September 2000 (2000-09-05)	21-23
Y	figure 1 column 12, lines 12-35 column 13, line 59 - column 15, line 10 column 16, lines 43-45 column 17, lines 46-56	7

1

INTERNATIONAL SEARCH REPORT

Information on patent family members

International application No
PCT/US2015/025052

Patent document cited in search report	Publication date	Patent family member(s)	Publication date
US 2008141672 A1	19-06-2008	AU 2007333808 A1	26-06-2008
		CA 2672801 A1	26-06-2008
		CN 102015072 A	13-04-2011
		EP 2219762 A2	25-08-2010
		JP 5302895 B2	02-10-2013
		JP 2010521944 A	24-06-2010
		KR 20090099559 A	22-09-2009
		RU 2009127114 A	20-01-2011
		US 2008141672 A1	19-06-2008
		US 2011061361 A1	17-03-2011
		WO 2008076963 A2	26-06-2008
US 2013009102 A1	10-01-2013	US 2013009102 A1	10-01-2013
		US 2014056774 A1	27-02-2014
US 6048472 A	11-04-2000	AU 705847 B1	03-06-1999
		CA 2256224 A1	23-06-1999
		DE 69811467 D1	27-03-2003
		DE 69811467 T2	20-11-2003
		EP 0926096 A1	30-06-1999
		ES 2192739 T3	16-10-2003
		ID 22187 A	16-09-1999
		MY 129028 A	30-03-2007
		NO 985962 A	24-06-1999
		US 6048472 A	11-04-2000
		US 6110979 A	29-08-2000
WO 2007092844 A2	16-08-2007	US 2008000350 A1	03-01-2008
		WO 2007092844 A2	16-08-2007
US 6114400 A	05-09-2000	AT 353852 T	15-03-2007
		AU 736483 B2	26-07-2001
		AU 4760099 A	06-04-2000
		CA 2282142 A1	21-03-2000
		DE 69935101 T2	25-10-2007
		EP 0989093 A2	29-03-2000
		ES 2281156 T3	16-09-2007
		NO 994552 A	22-03-2000
		US 6114400 A	05-09-2000