G. & M. L. BACON.

RAIL JOINT CHAIR.

APPLICATION FILED DEC. 20, 1911.

1,041,403.

Patented Oct. 15, 1912.

2 SHEETS—SHEET 1.

Fig. 1.

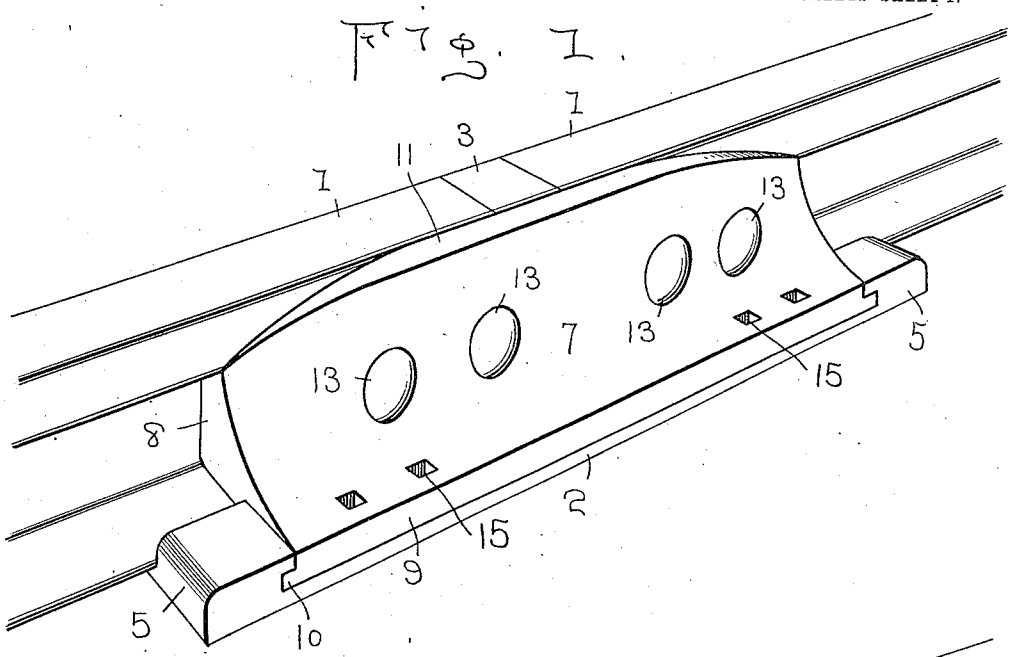

Fig. 2.

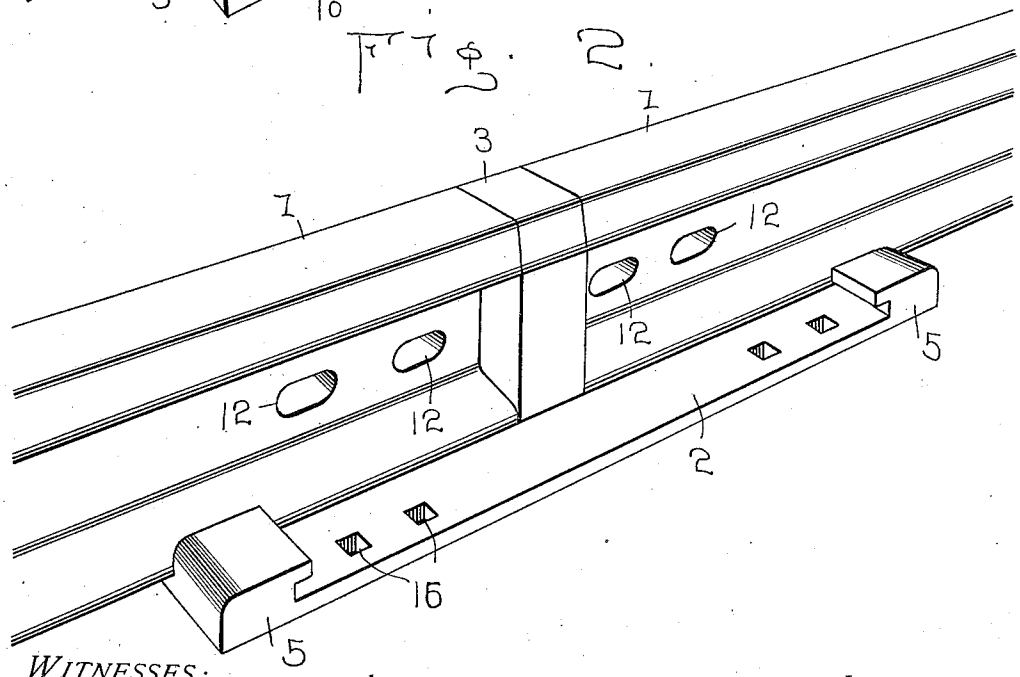

WITNESSES:

Thos. W. Riley

M. Newcomb.

INVENTORS

G. Bacon

and

M. L. Bacon

BY

W. T. FitzGerald & Co.,

Attorneys

G. & M. L. BACON.

RAIL JOINT CHAIR.

APPLICATION FILED DEC. 20, 1911.

1,041,403.

Patented Oct. 15, 1912.

2 SHEETS—SHEET 2.

Fig. 3.

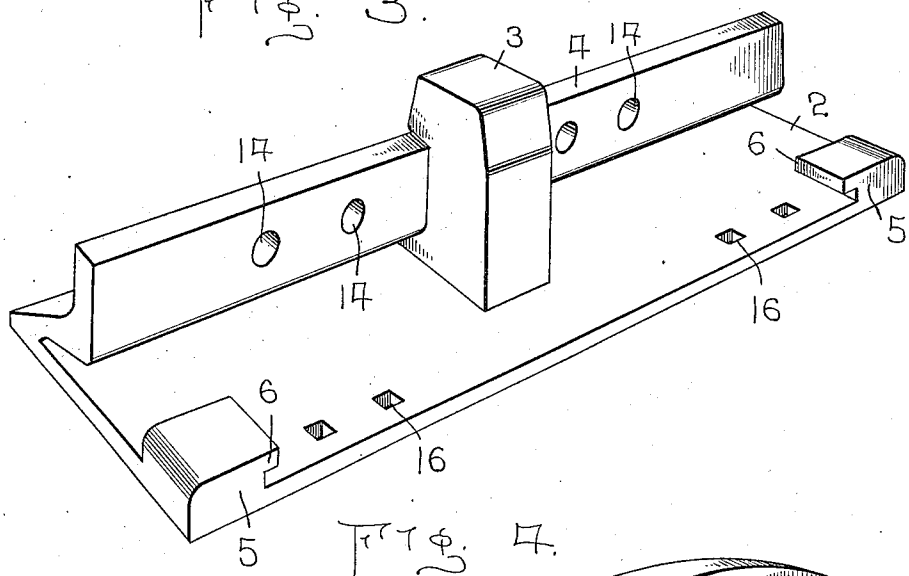

Fig. 4.

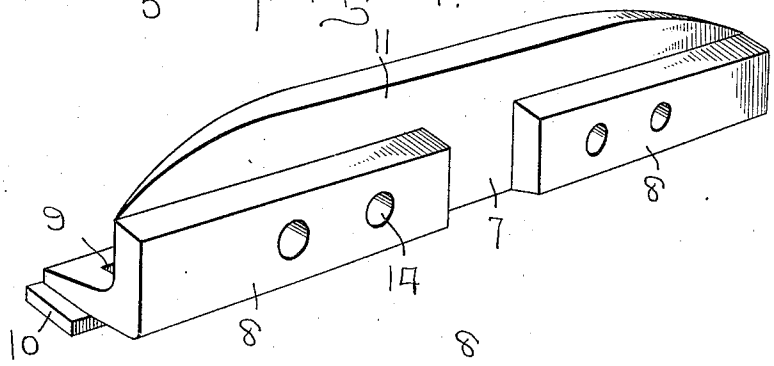

Fig. 5.

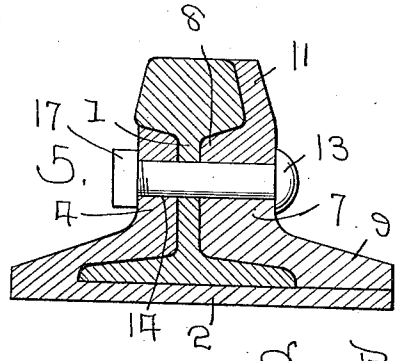

WITNESSES:

Thos. W. Riley

M. Newcomb.

INVENTORS

G. Bacon and

M. L. Bacon

BY

W. J. FitzGerald & Co.,

Attorneys

UNITED STATES PATENT OFFICE.

GILBERT BACON AND MILTON L. BACON, OF ANTIGO, WISCONSIN.

RAIL-JOINT CHAIR.

1,041,403. Specification of Letters Patent. Patented Oct. 15, 1912.

Application filed December 20, 1911. Serial No. 666,905.

To all whom it may concern:

Be it known that we, GILBERT BACON and MILTON L. BACON, citizens of the United States, residing at Antigo, in the county of Langlade and State of Wisconsin, have invented certain new and useful Improvements in Rail-Joint Chairs; and we do hereby declare the following to be a full, clear, and exact description of the invention, such as will enable others skilled in the art to which it appertains to make and use the same.

This invention relates to railway track construction and more particularly to rail joint chairs.

An object of the invention is to provide a railway joint chair which will securely hold the meeting ends of the rails and prevent undue shifting or separation of the chair elements, while allowing free longitudinal movement of the rail ends during expansion and contraction of the rails.

Another object is to provide a rail joint chair consisting of two pieces which will securely hold and support the meeting ends of the rails.

Another object is to construct a chair of this character provided with a center block carried by one of said pieces consisting of a short track-rail section to be fitted between the meeting ends of the rails to co-act with the rails, the upper surface of said block being flush with the tread of the rails and constituting a tread section.

A further object is to provide a joint chair of this character comprising a main or inner section which forms a base plate for the rails and a support for engagement against the inner side of the webs of the rails while the outer or auxiliary section is locked and engaged against the opposite side of the webs of the rail section, both sections thus forming supports for the tread portions of the rails.

A still further object is to provide an auxiliary rail tread element or joint-protecting element for preventing the usual shock and jar attending railway joints of ordinary construction, after being used for awhile.

A still further object is to generally improve the construction and to increase the efficiency of rail joint chairs.

Other objects and advantages will be hereinafter set forth and pointed out in the specification and claims.

In the accompanying drawings, which are made a part of this application, Figure 1, is a perspective view of the joint chair in use, Fig. 2, is a similar view with the outer section removed, Fig. 3, is a detail perspective view of the main section or center block carrying section, Fig. 4, is a similar view of the detachable outer section, and, Fig. 5, is a cross sectional view through the device in use, as shown in Fig. 1, the section being in line with one of the securing bolts.

Referring more particularly to the drawings in which similar reference numerals designate corresponding parts throughout the several views, 1 represents the rail road track rails, the adjacent ends of which are adapted to rest upon the base plate 2 and engage against opposite sides of the center block or track-rail section 3 projecting upwardly from the base portion 2. Projecting upwardly from one long edge or side edge of the base portion 2 and integral therewith is the web engaging portion or fish-plate 4, engaging the rails upon the inner side or the side between the parallel track-rails.

The web engaging portion 4 has its upper surface properly beveled to fit under the tread portion or head of the rails at opposite sides of the block 3, it being understood that the block 3 projects a sufficient distance above the upper edge of the web engaging portion 4 to be flush or on the same plane with the tread surfaces of the rails 1.

At the corners of the opposite long or side edge of the base portion 2 are the guiding and locking lugs 5 which serve to guide the rails to their proper positions in their longitudinal movement, and for locking said rails in position. The horizontally extending flanges 6 of the guiding and locking lugs 5 serve to guide the detachable or outer section 7 of the chair and to lock the same in position with its web engaging portions or fish-plate sections 8 seated against the side of the web portion of the rail sections opposite that engaged by the portion 4 of the main section of the chair.

The longitudinally spaced fish-plate sections 8, of the detachable sections 7, are integral with the base of flange 9, from the opposite ends of which project tongues 10 engaged by the flanges 6 of the lugs 5. Outwardly of the fish-plate sections 8 and extending upwardly above said portions 8, as shown at 11, is an elongated auxiliary rail-

tread element, its top surface being flush with the tread surface of the rails 1. A space is left between the ends of the fish-plate sections 8, to accommodate the center block 3, as will be clearly understood.

The rails 1 are provided with elongated bolt openings 12 through which the bolts 13 are passed, it being understood that said bolts also pass through registering openings 14 in the fish-plate and fish-plate sections 4 and 8 respectively of the chair sections. It will also be understood that suitable spikes or other securing means may be passed through the vertical and registering openings 15 and 16 for securing the rails to a tie or other element (not shown).

In securing the adjacent ends of two rail sections in this chair, the ends of the rails are slid in position, with the fish-plate sections between the lugs 5 and the fish-plate 4 until the ends of the rails strike the center block or track-rail section 3. The detachable section 7 of the chair is then placed in position against the webs of the adjacent rails by sliding the tongues 10 beneath the flanges 6 of the lugs 5. The bolts 13 are then passed through the openings 14 in the fish plate sections and through the elongated slots 12 of the rails 1, and the nuts 17 are then secured over the threaded ends of the bolts. The chair may then be secured to the tie by passing the spikes through the openings 15 and 16 as previously described.

The tendency of railroad rails to "spread" under very heavy locomotives is well known, and the relative weakness of rails at their adjacent ends is well known, as is also well known, the fact that rails become depressed at their ends, and that the wheels pass thereover with a heavy jar that increases the "spreading" tendency of the rails. Now, by the provision of the auxiliary rail tread element 11, the rail joints are protected against the depressing tendency of the wheels, passing thereover, and at the same time, the top or head of the rail is supported against lateral movement; that is, against the tendency to spread. The auxiliary rail tread element is curved downwardly and inwardly at both ends, thereby avoiding any abruptness where its upper surface comes into the same horizontal plane with the tread surfaces of the rails of the rail section 3. The upper surface of the auxiliary rail tread element being wider at its middle portion than at its ends, the maximum of efficiency and the minimum of expense results.

Owing to the manner in which the block 3 fits into the space between the fish-plate sections 8 it is impossible for relative movement of the sections 4 and 8 to take place in a longitudinal direction. Moreover, when the block is firmly seated in said plates, it is impossible for the said sections to approach each other, and so, by making the lug of such size, that when seated, the space between the elements 4 and 8 is of slightly greater width than the thickness of the rail webs, the latter will have free play for expansion and contraction, between the elements 4 and 8, the elongated holes 12 allowing movement laterally of the bolts 14 without tending to loosen or move the bolts 14 or nuts 17.

It will thus be seen that we have provided a rail joint chair which may securely support and brace the meeting ends of the rail sections and which will permit of necessary expansion, but prevent undue movement and separation of the rail sections, such as caused by creeping of the rail sections.

What we claim is:

1. In a rail joint chair, a main section and an auxiliary section adapted to embrace the adjacent ends of railroad rails of ordinary construction, said main section consisting of a horizontal base plate and the middle track-rail section and a fish-plate united with the track-rail section, said auxiliary section having a base flange seated upon the base plate and having a pair of spaced fish-plate sections between which said track-rail section is seated.

2. In a rail joint chair, a main section and an auxiliary section adapted to embrace the adjacent ends of railroad rails of ordinary construction, said main section consisting of a horizontal base plate and a middle track-rail section and a fish-plate united with the track-rail section, said auxiliary section having a base flange seated upon the base plate, having a pair of spaced fish-plate sections between which said track-rail section is seated, and having an elongated track-rail element extending along the sides of the adjacent rail ends with its top surface on the same horizontal plane with the top surfaces of said rails.

3. In a rail joint chair, a main section and an auxiliary section adapted to embrace the adjacent ends of railroad rails of ordinary construction, said main section consisting of a horizontal base plate and a middle track-rail section and a fish-plate united with the track-rail section and having horizontally extending flanges on said base plate, said auxiliary section having a base flange seated upon the base plate and having an elongated track-rail element extending along the sides of the adjacent rail ends with its top surface on the same horizontal plane with the top surfaces of said rails.

4. In a rail joint chair, a main section and an auxiliary section adapted to embrace the adjacent ends of railroad rails of ordinary construction, said main section consisting of a horizontal base plate and a middle track-rail section and a fish-plate united with the track-rail section and having horizontally extending flanges on said base

plate, said auxiliary section having a base flange seated upon the base plate and having a pair of spaced fish-plate sections between which said track-rail section is seated and having tongues on said base plate seated under said horizontal flanges.

In testimony whereof we have signed our names to this specification in the presence of two subscribing witnesses.

GILBERT BACON.
MILTON L. BACON.

Witnesses:
FRED W. KIEFER,
FRANCES H. FREDERICKSEN.