(12) INTERNATIONAL APPLICATION PUBLISHED UNDER THE PATENT COOPERATION TREATY (PCT)

(19) World Intellectual Property Organization
International Bureau

(43) International Publication Date
11 April 2013 (11.04.2013)

WIPO | PCT

(10) International Publication Number
WO 2013/049879 A1

(51) International Patent Classification: *H02J 7/04* (2006.01)

(21) International Application Number: PCT/AU2012/001079

(22) International Filing Date: 10 September 2012 (10.09.2012)

(25) Filing Language: English

(26) Publication Language: English

(30) Priority Data:
2011904076 3 October 2011 (03.10.2011) AU

(71) Applicant *(for all designated States except US)*: **MEGA-PULSE AUSTRALIA PTY LTD** [AU/AU]; c/o Level 32, 239 George Street, Brisbane, Queensland 4000 (AU).

(72) Inventor; and
(75) Inventor/Applicant *(for US only)*: **NADDEI, Rosario** [AU/AU]; 11 Fortuna Court, Eatons Hill, Queensland 4037 (AU).

(74) Agent: **CULLENS**; Level 32, 239 George Street, Brisbane, Queensland 4000 (AU).

(81) Designated States *(unless otherwise indicated, for every kind of national protection available)*: AE, AG, AL, AM, AO, AT, AU, AZ, BA, BB, BG, BH, BN, BR, BW, BY, BZ, CA, CH, CL, CN, CO, CR, CU, CZ, DE, DK, DM, DO, DZ, EC, EE, EG, ES, FI, GB, GD, GE, GH, GM, GT, HN, HR, HU, ID, IL, IN, IS, JP, KE, KG, KM, KN, KP, KR, KZ, LA, LC, LK, LR, LS, LT, LU, LY, MA, MD, ME, MG, MK, MN, MW, MX, MY, MZ, NA, NG, NI, NO, NZ, OM, PA, PE, PG, PH, PL, PT, QA, RO, RS, RU, RW, SC, SD, SE, SG, SK, SL, SM, ST, SV, SY, TH, TJ, TM, TN, TR, TT, TZ, UA, UG, US, UZ, VC, VN, ZA, ZM, ZW.

(84) Designated States *(unless otherwise indicated, for every kind of regional protection available)*: ARIPO (BW, GH, GM, KE, LR, LS, MW, MZ, NA, RW, SD, SL, SZ, TZ, UG, ZM, ZW), Eurasian (AM, AZ, BY, KG, KZ, RU, TJ, TM), European (AL, AT, BE, BG, CH, CY, CZ, DE, DK, EE, ES, FI, FR, GB, GR, HR, HU, IE, IS, IT, LT, LU, LV, MC, MK, MT, NL, NO, PL, PT, RO, RS, SE, SI, SK, SM, TR), OAPI (BF, BJ, CF, CG, CI, CM, GA, GN, GQ, GW, ML, MR, NE, SN, TD, TG).

Published:

— *with international search report (Art. 21(3))*

(54) Title: AN IMPROVED BATTERY CONDITIONING APPARATUS

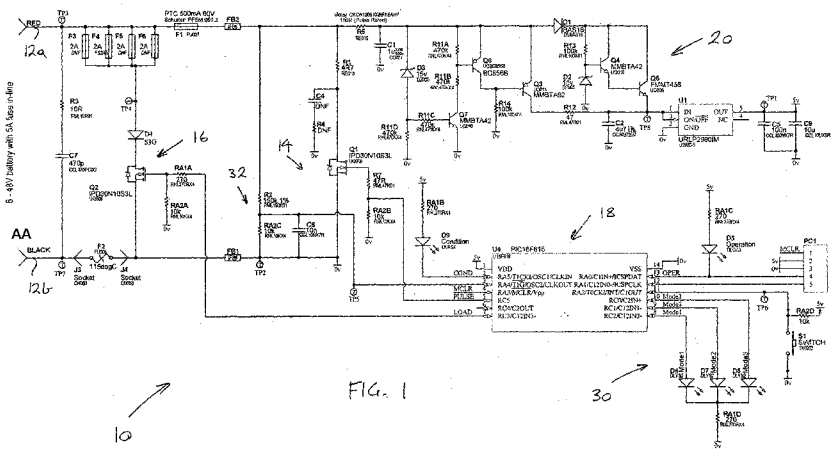

FIG. 1

(57) Abstract: The present invention relates to a battery conditioning apparatus for conditioning a battery. The apparatus includes a pulse generator circuit for generating pulses to be applied to the battery. A loading circuit is provided for loading the battery. The apparatus also includes a controller for controlling the pulse generator circuit and loading circuit to concurrently apply the pulses to and load the battery.

WO 2013/049879 A1

AN IMPROVED BATTERY CONDITIONING APPARATUS

TECHNICAL FIELD

The present invention relates to a battery conditioning apparatus. The present invention has particular, although not exclusive application to automobile batteries.

BACKGROUND

The reference to any prior art in this specification is not, and should not be taken as an acknowledgement or any form of suggestion that the prior art forms part of the common general knowledge.

Battery conditioning apparatus' prevent or reverse the accumulation of lead sulphate on the electrodes of a lead-acid battery by generating electrical pulses that are applied to the terminals of the battery. It has been found that such conditioning apparatus' can significantly increase the operating life and efficiency of batteries.

AU 2003249756 discloses a known battery conditioning apparatus including discrete circuit components. Undesirably, this apparatus only yields suitable conditioning performance for a particular battery voltage and therefore multiple models of the apparatus, with different component values, are required to accommodate for corresponding battery voltages.

The preferred embodiment of the present invention provides an improved battery conditioning apparatus.

SUMMARY OF THE INVENTION

According to one aspect of the present invention, there is provided a battery conditioning apparatus for conditioning a battery, the apparatus including:

a pulse generator circuit for generating pulses to be applied to the battery;

a loading circuit for loading the battery; and

a controller for controlling the pulse generator circuit and loading circuit to concurrently apply the pulses to and load the battery.

Concurrently applying the pulses to and loading the battery results in improved battery conditioning when compared with known conditioning methods.

The battery conditioning apparatus may further include a power supply circuit for powering the apparatus from any vehicle battery (e.g. rated from 6 to 48V), without the need for different apparatus models to accommodate different battery voltages. The power supply circuit may include a voltage regulator and pre-regulator circuitry connected to the input of the voltage regulator. The pre-regulator circuitry may be configured to restricting the current flowing into the voltage regulator and suppress voltage pulses input to the voltage regulator.

The battery conditioning apparatus may further include a user interface. The user interface may include a selector for selecting between conditional modes for said controlling of the apparatus. The user interface may include a display for displaying a selected mode of operation.

The battery conditioning apparatus may further include a battery voltage sensor circuit for sensing the battery voltage. The conditional modes of operation may relate to the sensed battery voltage.

The concurrently generated pulses and loading of the battery may both be performed at a fixed frequency. The fixed frequency may be between 1kHz to 10kHz, and preferably 5kHz. Alternatively, the concurrently generated pulses and loading of the battery may sweep between 1kHz to 10kHz. The duty cycle of the loading of the battery may be based upon the sensed battery voltage.

The loading circuit may provide a short (or virtual short) across the battery. The loading circuit may include a resistance etched on a printed circuit board (PCB) of the apparatus. The controller may be further configured to periodically perform a load test of the battery to ascertain the integrity of the battery. The battery conditioning apparatus may further include a display for displaying the result of the load test.

The pulse generator circuit may not include an inductor, relying instead upon the inductance of the battery.

According to another aspect of the present invention, there is provided a method for conditioning a battery, the method including the step of concurrently applying pulses to and loading the battery.

The method may further include the step of conditionally applying the pulses to and loading the battery using the sensed voltage of the battery.

The method may further include the step of periodically performing a load test of the battery.

According to another aspect of the present invention, there is provided a battery conditioning apparatus for conditioning a battery, the apparatus including a power supply circuit for powering the apparatus from any vehicle battery, without the need for different apparatus models to accommodate different battery voltages.

BRIEF DESCRIPTION OF THE DRAWINGS

Preferred features, embodiments and variations of the invention may be discerned from the following Detailed Description which provides sufficient information for those skilled in the art to perform the invention. The Detailed Description is not to be regarded as limiting the scope of the preceding Summary of the Invention in any way. The Detailed Description will make reference to the following drawing:

Figure 1 is a schematic diagram of a battery conditioning apparatus in accordance with an embodiment of the present invention.

DETAILED DESCRIPTION OF PREFERRED EMBODIMENTS

According to an embodiment of the present invention, there is provided a battery conditioning apparatus 10 for conditioning a vehicle battery (not shown) coupled to terminals 12a, 12b as shown in Figure 1. The apparatus 10 includes a pulse generator circuit 14 for generating pulses to be applied to the battery. A high-current loading circuit 16 is also provided for loading the battery. The apparatus 10 further includes a controller 18 for controlling the pulse generator 14 and loading circuit 16 to concurrently apply the pulses to and load the battery which is an improvement over known conditioning methods. A detailed description of the apparatus 10 is provided below.

The battery conditioning apparatus 10 further includes a power supply circuit 20 for powering the apparatus from any battery rated from 6 and 48V, without the need for different apparatus models to accommodate different battery voltages. The power supply circuit 20 includes a voltage regulator U1 and pre-regulator circuitry including zener diodes D2, D3. The pre-regulator circuitry is connected to the input of the voltage regulator U1 and is configured to restrict the current flowing into the voltage regulator U1 to minimise battery current drain. The pre-regulator circuitry also suppresses voltage pulses input to the voltage regulator U1.

The battery conditioning apparatus 10 further includes a user interface 30. The user interface 30 includes a action switch selector S1 for selecting between various conditional modes (i.e. modes 1 to 3 below) for controlling the apparatus 10. The battery conditioning apparatus 10 further includes a battery voltage sensor circuit 32 including voltage divider R2, RA2C for sensing the voltage of the battery and providing feedback via input port 3 of microprocessor U4 of controller 18. The conditional modes of operation relate to the sensed battery voltage.

The user interface 30 also includes a light emitting diode (LED) display for displaying a selected mode of operation of the apparatus 10. The LED display includes three mode LEDs D6 to D8 which are actuated by the controller 18 in accordance with the mode of operation of the apparatus 10 as indicated below:

Mode 1: controller 18 controls the pulse generator 14 and loading circuit 16 to concurrently apply the pulses to and load the battery provided that the sensed battery voltage is above 10.5V (for a 12V vehicle battery). That is, the conditioning apparatus 10 conditions the vehicle battery all the time unless the battery is low and needs to be preserved.

Mode 2: controller 18 controls the pulse generator 14 and loading circuit 16 to concurrently apply the pulses to and load the battery when the sensed battery voltage is between 10.5V and 12.8V (for a 12V vehicle battery). That is, the conditioning apparatus 10 conditions the battery when the vehicle engine is not running.

Mode 3: controller 18 controls the pulse generator 14 and loading circuit 16 to concurrently apply the pulses to and load the battery when the sensed battery voltage is above 12.8V (for a 12V vehicle battery). That is, the conditioning apparatus 10 conditions the battery when the vehicle engine is running.

The high current loading circuit 16 provides a short (or virtual short) across the battery when the controller 18 actuates field effect transistor (FET) switch Q2. The loading circuit 16 includes a serpentine resistance (not shown) etched on a printed circuit board (PCB) of the apparatus 10. The controller 18 is further configured to actuate the switch Q2 and periodically perform a load test of the battery every twenty-one hours to ascertain the integrity of the battery.

The load test involves actuating switch Q2 for 5 milliseconds and sensing the battery voltage with sensing circuit 32. Load currents through Q2 of approx. 20 Amps and 40 Amps are present in 12V and 24V vehicle battery systems

respectively. The load test is a pass if the sensed battery voltage drop during the load test is less than 2 V and is otherwise a fail.

The battery conditioning apparatus 10 further includes a load test display for displaying the result of the load test. The load test display includes a green load test pass LED D9 which the controller 18 illuminates responsive to a load test pass, and a red load test fail LED D5 which the controller 18 illuminates responsive to a load test failure.

During battery conditioning, the concurrently generated pulses and loading of the battery may both be performed at a fixed frequency of between 1kHz to 10kHz, and preferably 5kHz. The duty cycle of the loading of the battery with the loading circuit 16 is based upon the sensed vehicle battery voltage as follows:

Battery voltage	**Loading circuit duty cycle**
6V and 12V	0.4%
24V	0.2%
36V and 48V	0.1%

The controller 18 actuates the FET switch Q1 of the pulse generator circuit 14 with a 50% duty cycle. The pulse generator circuit 14 does not include an inductor, and instead relies upon the internal inductance of the battery to generate the pulses applied to the battery.

The concurrent controlling of the pulse generator 14 and loading circuit 16 to concurrently apply the pulses to and load the battery results in a desirable resultant waveform applied to the battery for improved conditioning. By short circuiting the battery with the loading circuit 16, the internal inductance of the battery advantageously causes "kicking back" of the applied pulses which is an improvement over known conditioning methods.

The apparatus 10 includes a resettable fuse F1 (or polyswitch), an external replaceable fuse F2 and up to four internal fuses F3 to F6.

A person skilled in the art will appreciate that many embodiments and variations can be made without departing from the ambit of the present invention.

In one embodiment, the concurrently generated pulses and loading of the battery may continuously sweep between 1kHz to 10kHz during conditioning of the battery.

In compliance with the statute, the invention has been described in language more or less specific to structural or methodical features. It is to be understood that the invention is not limited to specific features shown or described since the means herein described comprises preferred forms of putting the invention into effect.

The claims defining the invention are as follows:

1. A battery conditioning apparatus for conditioning a battery, the apparatus including:

a pulse generator circuit for generating pulses to be applied to the battery;

a loading circuit for loading the battery; and

a controller for controlling the pulse generator circuit and loading circuit to concurrently apply the pulses to and load the battery.

2. A battery conditioning apparatus as claimed in claim 1, further including a power supply circuit for powering the apparatus from any vehicle battery.

3. A battery conditioning apparatus as claimed in claim 2, wherein the power supply circuit includes a voltage regulator and pre-regulator circuitry connected to the input of the voltage regulator.

4. A battery conditioning apparatus as claimed in claim 3, wherein the pre-regulator circuitry is configured to restrict the current flowing into the voltage regulator and suppress voltage pulses input to the voltage regulator.

5. A battery conditioning apparatus as claimed in claim 1, further including a user interface including a selector for selecting between conditional modes for said controlling of the apparatus.

6. A battery conditioning apparatus as claimed in claim 5, wherein the user interface includes a display for displaying a selected mode.

7. A battery conditioning apparatus as claimed in claim 5, further including a battery voltage sensor circuit for sensing the battery voltage wherein the conditional modes relate to the sensed battery voltage.

8. A battery conditioning apparatus as claimed in claim 1, wherein the concurrently generated pulses and loading of the battery are both performed at a fixed frequency.

9. A battery conditioning apparatus as claimed in claim 8, wherein the fixed frequency is between 1kHz to 10kHz, and preferably 5kHz.

10. A battery conditioning apparatus as claimed in claim 1, wherein the concurrently generated pulses and loading of the battery sweep between 1kHz to 10kHz.

11. A battery conditioning apparatus as claimed in claim 1, wherein the duty cycle of the loading of the battery is based upon a sensed battery voltage.

12. A battery conditioning apparatus as claimed in claim 1, wherein the loading circuit provides a short or virtual short across the battery.

13. A battery conditioning apparatus as claimed in claim 1, wherein the loading circuit includes a resistance etched on a printed circuit board (PCB) of the apparatus.

14. A battery conditioning apparatus as claimed in claim 1, wherein the controller is further configured to periodically perform a load test of the battery to ascertain the integrity of the battery.

15. A battery conditioning apparatus as claimed in claim 14, further including a display for displaying the result of the load test.

16. A battery conditioning apparatus as claimed in claim 1, wherein the pulse generator circuit does not include an inductor, relying instead upon the inductance of the battery.

17. A method for conditioning a battery, the method including the step of concurrently applying pulses to and loading the battery.

18. A method as claimed in claim 17, further including the step of conditionally applying the pulses to and loading the battery using a sensed voltage of the battery.

19. A method as claimed in claim 17, further including the step of periodically performing a load test of the battery.

20. A battery conditioning apparatus for conditioning a battery, the apparatus including a power supply circuit for powering the apparatus from any vehicle battery, without the need for different apparatus models to accommodate different battery voltages.

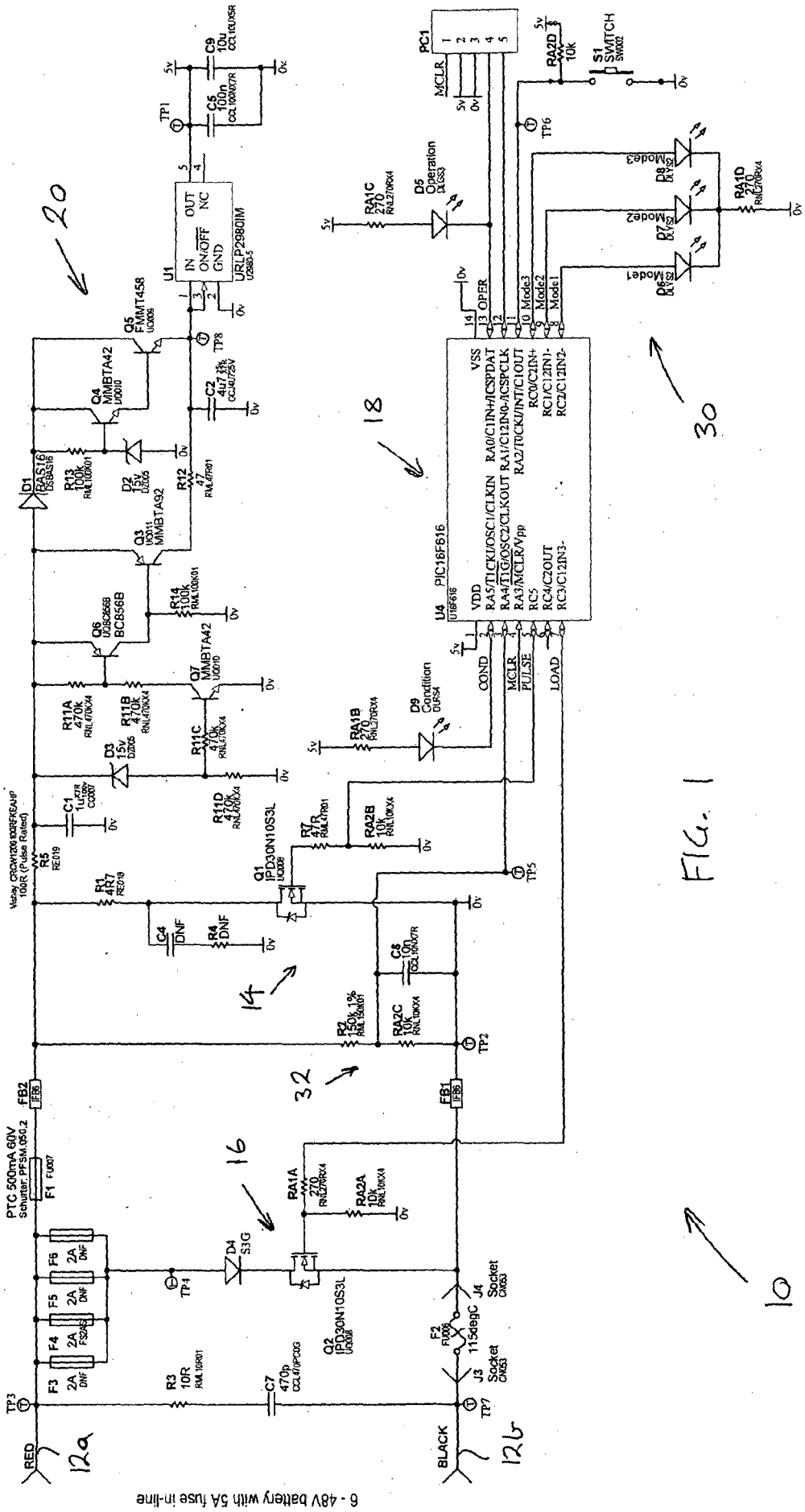
6 - 48V battery with 5A fuse in-line
RED
BLACK
12a
12b
PTC 500mA 60V
Schurter: PF5M.050.2
F1 FU007
FB2 FB6
FB1 FB6
F3 2A DNF
F4 2A FS006
F5 2A DNF
F6 2A DNF
TP3
TP4
TP2
TP5
TP7
TP6
TP8
TP1
R3 10R RM.10R01
C7 470p CCL470PC03
D4 S3G
Q2 IPD30N10S3L UD008
Q1 IPD30N10S3L UD008
J3 Socket CM053
J4 Socket CM053
F2 115degC
R2 30k 1% RM.30K01
RA2C 10k RNL10KX4
C6 10n CCL100N07R
R7 47R RM.47R01
RA2B 10k RNL10KX4
RA1A 270 RNL270RX4
RA2A 10k RNL10KX4
R1 4R7 RED19
R5 RED19
C1 1uF7R CC007
C4 DNF
R4 DNF
R11A 470k RNL470KX4
R11B 470k RNL470KX4
R11C 470k RNL470KX4
R11D 470k RNL470KX4
D3 15v DZ005
Q6 BC856B
R14 100k RNL100K01
Q3 MMBTA92
R12 47 RM.47R01
D2 15v DZ005
R13 100k RNL100K01
Q4 MMBTA42 UD010
Q5 FMMT458
D1 BAS16
Q7 MMBTA42 UD010
C2 4u7 25k CCL4U7/25V
U1 URLP2980IM
IN ON/OFF GND OUT NC
C5 100n CCL100N07R
C9 10u CCL10UX5R
U4 PIC16F616
VDD VSS
RA5/T1CKI/OSC1/CLKIN
RA4/T1G/OSC2/CLKOUT
RA3/MCLR/Vpp
RC5 RC4/C2OUT
RC3/C12IN3-
RA0/C1IN+/ICSPDAT
RA1/C12IN0-/ICSPCLK
RA2/T0CKI/INT/C1OUT
RC0/C12IN+
RC1/C12IN1-
RC2/C12IN2-
COND
MCLR
PULSE
LOAD
OPER
Mode3
Mode2
Mode1
PC1
MCLR
RA2D 10k
S1 SWITCH SW002
RA1C 270 RNL270RX4
D5 Operation DL003
RA1B 270 RNL270RX4
D9 Condition DL004
RA1D 270 RNL270RX4
D8 DL003
D7 DL003
D6 DL003
14
16
18
20
30
32
10

FIG. 1

INTERNATIONAL SEARCH REPORT

International application No.
PCT/AU2012/001079

A. CLASSIFICATION OF SUBJECT MATTER

H02J 7/04 (2006.01)

According to International Patent Classification (IPC) or to both national classification and IPC

B. FIELDS SEARCHED

Minimum documentation searched (classification system followed by classification symbols)

Documentation searched other than minimum documentation to the extent that such documents are included in the fields searched

Electronic data base consulted during the international search (name of data base and, where practicable, search terms used)

WPI & EPODOC - Keywords (battery, condition, pulse, load, regulator) and like terms.

C. DOCUMENTS CONSIDERED TO BE RELEVANT

Category*	Citation of document, with indication, where appropriate, of the relevant passages	Relevant to claim No.
	Documents are listed in the continuation of Box C	

[X] Further documents are listed in the continuation of Box C [X] See patent family annex

* Special categories of cited documents:

"A" document defining the general state of the art which is not considered to be of particular relevance

"E" earlier application or patent but published on or after the international filing date

"L" document which may throw doubts on priority claim(s) or which is cited to establish the publication date of another citation or other special reason (as specified)

"O" document referring to an oral disclosure, use, exhibition or other means

"P" document published prior to the international filing date but later than the priority date claimed

"T" later document published after the international filing date or priority date and not in conflict with the application but cited to understand the principle or theory underlying the invention

"X" document of particular relevance; the claimed invention cannot be considered novel or cannot be considered to involve an inventive step when the document is taken alone

"Y" document of particular relevance; the claimed invention cannot be considered to involve an inventive step when the document is combined with one or more other such documents, such combination being obvious to a person skilled in the art

"&" document member of the same patent family

Date of the actual completion of the international search	Date of mailing of the international search report
4 October 2012	04 October 2012
Name and mailing address of the ISA/AU	**Authorised officer**
AUSTRALIAN PATENT OFFICE PO BOX 200, WODEN ACT 2606, AUSTRALIA Email address: pct@ipaustralia.gov.au Facsimile No.: +61 2 6283 7999	Jae Cho AUSTRALIAN PATENT OFFICE (ISO 9001 Quality Certified Service) Telephone No. 0262223668

INTERNATIONAL SEARCH REPORT C (Continuation). DOCUMENTS CONSIDERED TO BE RELEVANT		International application No. **PCT/AU2012/001079**
Category*	Citation of document, with indication, where appropriate, of the relevant passages	Relevant to claim No.
X Y	US 4829225 A (PODRAZHANSKY et al.) 09 May 1989 Abstract, Fig 1 & 8, column 3 line 27 - column 4 line 8, column 6 lines 54-60 Abstract, Fig 1 & 8, column 3 line 27 - column 4 line 8, column 6 lines 54-60	1-2, 5-7, 13-15, 17-19 3-4
X	US 2005/0168227 A1 (NADDEI) 04 August 2005 Abstract, paragraphs [0004], [0058]-[0062], [0080]-[0081]	1-2, 8-12, 20
Y	US 6859016 B2 (DOTZLER) 22 February 2005 Abstract, Column 2 lines 20-36	3-4

INTERNATIONAL SEARCH REPORT

International application No.
PCT/AU2012/001079

Box No. II Observations where certain claims were found unsearchable (Continuation of item 2 of first sheet)

This international search report has not been established in respect of certain claims under Article 17(2)(a) for the following reasons:

1. ☐ Claims Nos.:
because they relate to subject matter not required to be searched by this Authority, namely:

2. ☐ Claims Nos.:
because they relate to parts of the international application that do not comply with the prescribed requirements to such an extent that no meaningful international search can be carried out, specifically:

3. ☐ Claims Nos:
because they are dependent claims and are not drafted in accordance with the second and third sentences of Rule 6.4(a)

Box No. III Observations where unity of invention is lacking (Continuation of item 3 of first sheet)

This International Searching Authority found multiple inventions in this international application, as follows:

See Supplemental Box for Details

1. ☐ As all required additional search fees were timely paid by the applicant, this international search report covers all searchable claims.
2. ☒ As all searchable claims could be searched without effort justifying additional fees, this Authority did not invite payment of additional fees.
3. ☐ As only some of the required additional search fees were timely paid by the applicant, this international search report covers only those claims for which fees were paid, specifically claims Nos.:
4. ☐ No required additional search fees were timely paid by the applicant. Consequently, this international search report is restricted to the invention first mentioned in the claims; it is covered by claims Nos.:

Remark on Protest

☐ The additional search fees were accompanied by the applicant's protest and, where applicable, the payment of a protest fee.

☐ The additional search fees were accompanied by the applicant's protest but the applicable protest fee was not paid within the time limit specified in the invitation.

☐ No protest accompanied the payment of additional search fees.

Supplemental Box

Continuation of: **Box III**

This International Application does not comply with the requirements of unity of invention because it does not relate to one invention or to a group of inventions so linked as to form a single general inventive concept.

This Authority has found that there are different inventions based on the following features that separate the claims into distinct groups:

- Claims 1-19 are directed to a battery conditioning apparatus for conditioning a battery, the apparatus including: a pulse generator circuit; a loading circuit; and a controller for controlling the pulse generator circuit and loading circuit.. The feature of having a pulse generator circuit, a loading circuit and a controller to concurrently apply the pulses to and load the battery is specific to this group of claims.

- Claim 20 is directed to a battery conditioning apparatus for conditioning a battery, the apparatus including a power supply circuit for powering the apparatus from any vehicle battery, without the need for different apparatus models to accommodate different battery voltages.. The feature of the battery conditioning apparatus being able to power the apparatus from any vehicle battery, without the need for different apparatus models to accommodate different battery voltages is specific to this group of claims.

PCT Rule 13.2, first sentence, states that unity of invention is only fulfilled when there is a technical relationship among the claimed inventions involving one or more of the same or corresponding special technical features. PCT Rule 13.2, second sentence, defines a special technical feature as a feature which makes a contribution over the prior art.

When there is no special technical feature common to all the claimed inventions there is no unity of invention.

In the above groups of claims, the identified features may have the potential to make a contribution over the prior art but are not common to all the claimed inventions and therefore cannot provide the required technical relationship. Therefore there is no special technical feature common to all the claimed inventions and the requirements for unity of invention are consequently not satisfied *a priori*.

INTERNATIONAL SEARCH REPORT Information on patent family members	International application No. **PCT/AU2012/001079**

This Annex lists known patent family members relating to the patent documents cited in the above-mentioned international search report. The Australian Patent Office is in no way liable for these particulars which are merely given for the purpose of information.

Patent Document/s Cited in Search Report		Patent Family Member/s	
Publication Number	**Publication Date**	**Publication Number**	**Publication Date**
US 4829225 A	09 May 1989	US 4829225 A	09 May 1989
US 2005/0168227 A1	04 Aug 2005	AU 2003249756 A1	23 Feb 2004
		KR 20050042777 A	10 May 2005
		US 2005168227 A1	04 Aug 2005
		WO 2004013926 A1	12 Feb 2004
US 6859016 B2	22 Feb 2005	US 2003057920 A1	27 Mar 2003
		US 6859016 B2	22 Feb 2005

End of Annex

Due to data integration issues this family listing may not include 10 digit Australian applications filed since May 2001.