Nov. 8, 1927. 1,648,840

F. J. CLARK

REWIND AND REPLAY MECHANISM FOR AUTOMATIC PLAYERS

Filed April 29, 1922 2 Sheets-Sheet 1

Fig. 1.

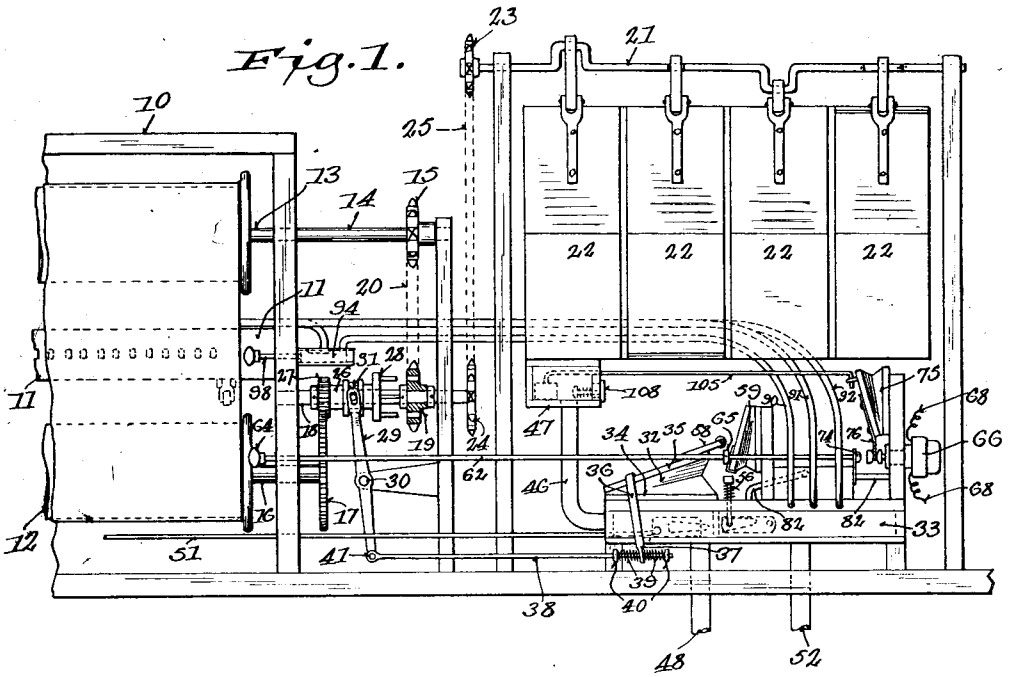

Fig. 4.

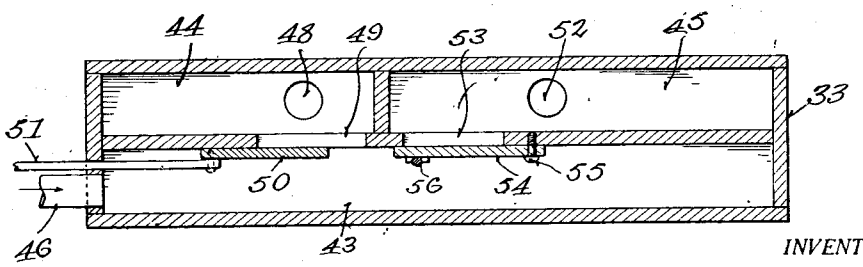

INVENTOR.
FRANK J. CLARK
BY
Ralph W. Brown.
ATTORNEY.

Nov. 8, 1927. 1,648,840

F. J. CLARK

REWIND AND REPLAY MECHANISM FOR AUTOMATIC PLAYERS

Filed April 29, 1922 2 Sheets-Sheet 2

Fig. 2.

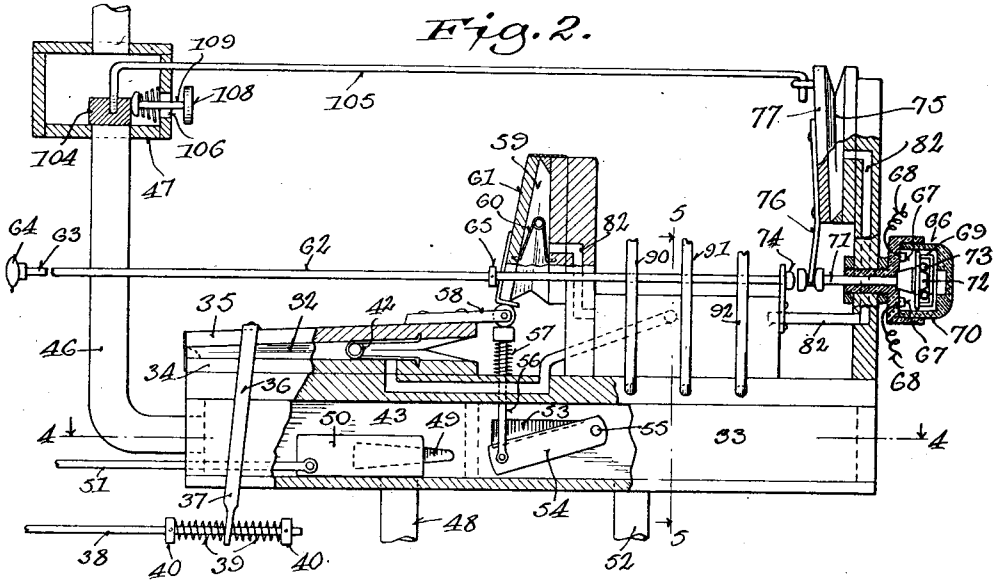

Fig. 3.

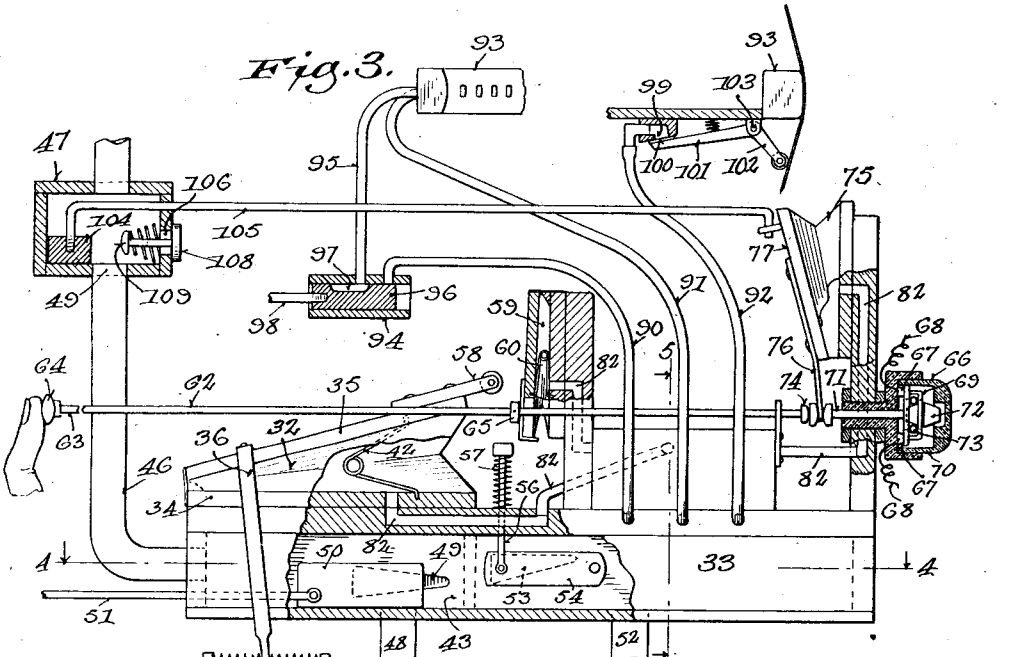

Fig. 5.

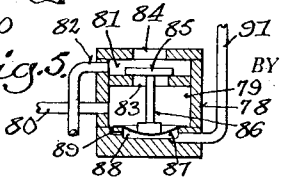

INVENTOR.
FRANK J. CLARK
BY
Ralph L. Brown
ATTORNEY.

Patented Nov. 8, 1927. 1,648,840

UNITED STATES PATENT OFFICE.

FRANK J. CLARK, OF MILWAUKEE, WISCONSIN, ASSIGNOR TO GRAND RAPIDS BOOK-CASE & CHAIR COMPANY, OF HASTINGS, MICHIGAN, A CORPORATION OF MICHIGAN.

REWIND AND REPLAY MECHANISM FOR AUTOMATIC PLAYERS

Application filed April 29, 1922. Serial No. 557,338.

This invention relates to automatic players and, more particularly, to control mechanisms therefor.

The equipment of standard player pianos ordinarily includes a transmission mechanism, controlled from the keyboard rail, and selectively operable to effect feeding of the music sheet from the spool during the rendition of a piece or to effect rewinding of the sheet onto the spool after playing. This mechanism is usually driven by a wind motor which receives its power from an appropriate pump or bellows constituting a source of suction. In power driven players, an electric motor is commonly employed for driving the pump or bellows. The motor switch is ordinarily operable independently of the transmission control, so that to start the player it has heretofore been necessary for the operator to set the transmission mechanism into playing position before closing the switch.

One object of the present invention is the provision of a unitary control by which starting of the player may be effected by a certain simple manipulation regardless of the prior setting of the transmission mechanism.

Another object is the provision of an improved mechanism automatically operable to effect rewinding of the music sheet after a piece has been played.

Another object is the provision of an improved mechanism automatically operable to effect replaying of a piece and adjustable to stop the player at the end of the rewinding operation.

Another object is the provision of an improved mechanism for automatically rendering the wind motor inactive when the motor switch is opened.

Other objects and advantages will hereinafter appear.

One embodiment of this invention is disclosed in the accompanying drawings, in which:

Figure 1 is a view in elevation of a control mechanism constructed in accordance with the present invention and shown applied to a piano of standard construction.

Figure 2 is a sectional view of the control mechanism of Figure 1, illustrating more or less diagrammatically the position of the parts normally assumed before playing.

Figure 3 is a similar view illustrating the position of parts during the rendition of a piece.

Figure 4 is a horizontal sectional view taken substantially on the line 4—4 of Figures 2 and 3.

Figure 5 is a sectional view taken substantially along the line 5—5 of Figures 2 and 3.

The piano partially illustrated in Figure 1 is equipped with the usual roll box 10 containing the usual tracker bar 11, feed roll 12 and music spindle 13. The spindle 13 is driven by a shaft 14 carrying a sprocket 15. The roll 12 is mounted upon and driven by a shaft 16 provided with a gear 17. A countershaft 18 carries a sprocket 19, loosely mounted thereon and operatively connected with the sprocket 15 through the usual chain 20. This shaft is driven from the crank shaft 21 of the wind motor 22, through the sprockets 23 and 24 and sprocket chain 25. Splined on the shaft 18 is a sleeve 26 having a pinion 27 secured at one end thereof and a clutch 28 secured at the other end. This sleeve is so mounted that when shifted to the left the pinion 27 is thrown into mesh with the gear 17 to drive the shaft 16 and feed roll 12. When shifted to the right the pinion 27 is disengaged from the gear 17 and clutch 28 is thrown into locking engagement with sprocket 19. When this occurs, shaft 16 is released and power is applied to the shaft 14 to rotate the spindle 13 and the music spool in such direction as to rewind the music thereon. The sleeve is controlled by a lever 29, pivoted at 30 and engaging the usual clutch collar 31. The winding mechanism thus far described is old and well known in the art, so that further or more detailed description thereof is deemed unnecessary.

The control mechanism selected for illustration includes a pneumatic 32 mounted in fixed position upon a chest 33 and provided with fixed and movable leaves 34 and 35.

An arm 36 is rigidly connected with the movable leaf 35, the free end 37 thereof being preferably yieldably connected with a lever 29 through a link 38. In this instance, the free end 37 of arm 36 is perforated to receive link 38 and is yieldably connected with the link through a pair of shock absorbing springs 39 carried by the link and each interposed between the end 37 of the arm and a nut or collar 40 secured to the link. The other end of link 38 is pivotally connected, as at 41, to the end of lever 29.

Pneumatic 32 is biased toward expanded position by a spring 42. When so expanded, an arm 36, link 38 and lever 29 are in such position that the sleeve 26 is shifted to the left and pinion 27 is in mesh with gear 17. This is the normal relation of the parts during the rendition of a piece. When pneumatic 32 is collapsed, arm 36 and link 38 are shifted to the left, thus rocking lever 29 to shift sleeve 26 to the right, so that clutch 28 is thrown into engagement with the sprocket 19. This is the condition of the parts during the rewinding operation. To effect collapse of the pneumatic 32, it is subjected to suction in a manner to be hereinafter described.

The chest 33 is divided into three compartments, 43, 44 and 45. Communication is effected between compartment 43 and the wind motor 22 through a conduit 46 and the valve box 47 to be hereinafter described. Compartment 44 communicates through a conduit 48 with the usual wind governing mechanism from which the wind motor received its power. A port 49 is provided between compartments 43 and 44. The effective area of this port is varied and controlled by a slide valve 50 manually controlled by a link 51 so as to vary the flow of air from compartment 43 to compartment 44 and thus vary and control the speed of the wind motor. Compartment 45 is connected through a conduit 52 with the source of suction so that high tension air is normally maintained in compartment 45. A port 53 is arranged between compartment 45 and compartment 43, this port being normally closed by a valve 54 pivotally mounted as at 55 and controlled by a plunger 56. A spring 57 associated with plunger tends at all times to retain the valve 54 in closed position.

The movable leaf 35 of pneumatic 32 carries a detent 58 adapted to depress the plunger 56 to open the valve 54 when the pneumatic is collapsed and to release the plunger when the pneumatic is expanded. Since, as above pointed out, the pneumatic 32 is in expanded condition during playing, the valve 54 is closed and the wind motor is driven at a comparatively low rate of speed under governed or low tension air. As soon, however, as pneumatic 32 is collapsed to throw the parts into rewinding position, valve 54 is opened, thus placing compartment 43, and consequently the wind motor, under the influence of high tension air to effect the desired high speed operation of the wind motor at this time.

A second pneumatic 59 is provided for releasably retaining pneumatic 32 in collapsed condition during replaying. This pneumatic is biased toward expanded condition by a spring 60. The movable leaf 61 of this pneumatic is arranged to cooperate with the detent 58 of pneumatic 32 in such manner as to permit the collapse of pneumatic 32 and to retain, by a latching action, detent 58 in the lowermost position shown, for instance, in Figure 2. To release pneumatic 32 to permit it to assume its normal expanded condition, it is necessary that pneumatic 59 be collapsed. In this instance, this is manually effected by means of a push rod 62 having one end 63 projecting to a point within convenient reach of the operator, and preferably within the roll box 10. This end of the rod may be provided with a suitable knob or push button 64. A bumper collar 65, carried by the rod, is adapted to bear upon the movable leaf 61 of pneumatic 59 to effect collapse of this pneumatic by pressure upon the button 64. Pneumatic 59 is normally open to atmospheric pressure, but may be collapsed by subjecting it to suction, in the manner, for instance, as that to be later described.

The push rod 62 also serves to close the switch 66 which controls the power circuit of the electric motor commonly used for driving the mechanism in player pianos of this type. The switch 66 shown is of well known construction. It includes a pair of contacts 67 connected respectively with power leads 68 and adapted to be closed by a contact in the form of a cage 69. This cage is mounted for reciprocation within the switch casing 70 and is controlled by a plunger 71 carrying a double end cone 72. A coiled spring 73, in the form of a loop, is enclosed within the cage 69 and embraces cone 72. The arrangement is such that when the plunger 71 is forced to the right (Fig. 2) until the coiled spring rises over the wide part of the double cone, the cage 69 is quickly shifted to the left to engage and thus electrically connect the two contacts. When the plunger is withdrawn a reverse action occurs and the switch is opened. In this instance, the end 74 of the push rod 62 is arranged adjacent the end of the plunger 71, so that when the push rod is forced to the right the plunger 71 is shifted in a similar direction to close the switch.

A pneumatic 75 is provided for opening the switch. This pneumatic is provided with an arm 76 secured to the movable leaf 77 thereof and having mechanical connection with plunger 71. Pneumatic 75 is normally open to atmospheric pressure, so that it does

not interfere with the manual closing of the switch. To open the switch, pneumatic 75 is subjected to suction, in the manner to be later described, by which the pneumatic is collapsed, the plunger 71 shifted to the left and the switch opened.

The three pneumatics 32, 59 and 75 are pneumatically controlled by any appropriate type of valve mechanism, a standard form of which will now be described. This mechanism, as herein shown, includes a valve block 78, provided with the usual channel 79, which is at all times in communication with a suitable source of suction through conduit 80. A plurality of separate chambers 81 are arranged adjacent the channel, each having separate communication through conduit 82 with one of the three pneumatics above named. Each chamber 81 is provided with the channel 79, and each is provided with a port 84 through which atmospheric air may be admitted to each chamber. A valve 85 is provided for controlling these two ports. Each valve is provided with a stem 86 which rests upon a flexible diaphragm 87 stretched across a pocket 88 formed within the base of the channel 79. A partial vacuum is maintained in each pocket 88 through a small bleed 89 communicating with channel 79, so that each valve is normally in lower position of Figure 5, in which position each port 83 is closed and each of the chambers 81 is open to atmospheric pressure, thus subjecting each of the three pneumatics to atmospheric pressure. To effect collapse of any of the three pneumatics, atmospheric air is admitted to one of the pockets 88 through one of the tubes 90, 91 or 92. This causes the diaphragm 87 of the selected pocket to flex upwardly, so that the selected valve 85 is lifted to close port 84 and open port 83. In this position, air is withdrawn from the selected pneumatic through conduit 82 and chamber 81 to the channel 79.

In the arrangement shown in Figure 3, tube 90 controls the pneumatic 59, tube 91 controls pneumatic 32 and tube 92 controls pneumatic 75. Tube 91 is connected directly with an appropriate opening in the tracker bar 93 controlled by a perforation or perforations in the music sheet. Tube 90 is connected to a valve casing 94 which, in turn is connected through tube 95 with a suitable opening in the tracker bar, controlled by a perforation or perforations in the music sheet. A valve 96 is mounted in casing 94 and provided with a duct 97 adapted to make or break communication between tubes 90 and 95, depending upon the position of the valve. This valve is preferably manually controlled by any appropriate means, such as a plunger 98 mounted within the convenient reach of the operator.

Tube 92 is connected with a port 99 controlled by a valve 100 carried by one arm 101 of a bell crank lever, whose other arm 102 is arranged to make a contact with the music sheet during the playing of a piece. This bell crank is pivotally mounted as at 103, and is biased toward rocking movement in such direction as to lift the valve 100 away from port 99. During the playing of a piece, however, the pressure upon the arm 102, due to the tension in the paper, is such as to retain the bell crank in valve closing position. When the tension in the paper is destroyed, however, as at the end of the rewinding operation, the bell crank swings to such position as to open the valve 100, thus permitting air to enter tube 92 to effect collapse of pneumatic 75. As above pointed out, this causes the opening of the switch 66 to stop the electric motor.

It has been found highly desirable to provide special mechanism for destroying the residual air tension in the wind motor, after the electric switch has been closed, to thus avoid any delayed action or operation of the wind motor. This is accomplished in this instance by the use of the valve box 47 hereinabove referred to. A valve 104 is provided in this box for opening and closing communication between the conduit 46 and box. This valve is connected by a link 105 with the movable leaf 77 of pneumatic 75. The box 47 is provided with an air inlet port 106 controlled by a spring pressed valve 108. Valves 104 and 108 are so corelated that when valve 104 is in open position, as indicated in Figure 3, valve 108 is closed, thus effecting positive communication between the wind motor and conduit 46. When valve 104 is shifted to closing position of Figure 2, however, it engages the stem 109 of valve 108 to force valve 108 to open position, thus permitting atmospheric air to enter the valve box to destroy any vacuum remaining in the wind motor.

Before playing, the various parts are normally in the position shown in Figure 2, that is, the pneumatic 75 is collapsed, pneumatic 59 is expanded and pneumatic 32 is collapsed. In some instances, before playing, pneumatic 32 is expanded. After placing the music spool upon the spindle 13 and connecting the music sheet with the player roll 12 in the usual manner, the player may be started merely by pressing the button 64 carried by the push rod 62 to shift rod 62 to the right. As above pointed out, this action of the rod closes the switch 66. This movement of the rod 62 also effects a collapse of pneumatic 59, so that in the event that pneumatic 32 was previously in collapsed condition, it is permitted to expand under the influence of its spring. The expansion of pneumatic 32, of course, shifts the transmission mechanism into playing position, as above described. Playing thus continues until a certain perforation in the

music sheet has permitted admission of atmospheric air to tube 91. When this occurs, pneumatic 32 is subjected to suction through its conduit 82 and chamber 81, in the manner above described, thus causing pneumatic 32 to collapse. This results in shifting the transmission mechanism to rewinding position and in opening the valve 54 to subject the wind motor to high tension air. Assuming that the valve 96 is in the position shown in Figure 3, the rewinding operation will continue until the tension in the music sheet has been destroyed by its disengaging from the feed roll. When this occurs, valve 100 will automatically shift to open position and atmospheric air will be admitted through port 99 into tube 92 to effect collapse of pneumatic 75. This action will, of course, open the switch 66, shift the valve 104 to closing position and open the valve 108.

If it is desired that a piece be automatically replayed, the valve 96 is shifted into position such that communication is established between tubes 90 and 95 through conduit 97. With the valve in this position, rewinding of the music will continue until the opening in the tracker bar associated with tube 95 is uncovered by a perforation in the music sheet. When this occurs, atmospheric air is admitted through tube 95 into tube 90, thus causing the pneumatic 59 to collapse to release pneumatic 32 and thus permit pneumatic 32 to expand and shift the transmission mechanism back into playing position.

Various changes may be made in the embodiment of the invention hereinabove described, without departing from or sacrificing any of the advantages of the invention as defined in the appended claims.

I claim:

1. In a sheet controlled pneumatic player, the combination of sheet feeding and rewinding mechanism, means including a pneumatic for selectively placing said mechanism in feeding and rewinding condition, resilient means for operating said pneumatic in one direction to place said mechanism in one condition, latch mechanism for releasably retaining said pneumatic and consequently said mechanism in the other condition, and means for releasing said latch mechanism to permit said pneumatic to respond to the action of resilient means.

2. In a sheet controlled pneumatic player, the combination of sheet feeding and rewinding mechanism, means including a pneumatic for selectively placing said mechanism in feeding and rewinding condition, pneumatic means for collapsing said pneumatic to place said mechanism in rewinding condition, latch mechanism for releasably retaining said pneumatic in collapsed condition, and resilient means for expanding said pneumatic to place said mechanism in sheet feeding condition when said latch mechanism is released.

3. In a sheet controlled pneumatic player, the combination of transmission mechanism selectively operable to feed and to rewind the sheet, a pneumatic, shock absorbing connections between said pneumatic and said mechanism, and means for operating said pneumatic to shift said mechanism into sheet feeding and rewinding condition.

4. In a sheet controlled pneumatic player the combination of sheet operating mechanism, sheet controlled means for controlling the operation of said mechanism so as to selectively feed and rewind the sheet, and a resilient connection between said control means and said mechanism.

5. In a sheet controlled pneumatic player, the combination of sheet feeding and rewinding mechanism, a wind motor for driving said mechanism, a connection between said motor and a source of suction, and means for severing said connection and for admitting atmospheric air to said motor to destroy the residual air tension therein.

6. In a sheet controlled pneumatic player, the combination of sheet feeding and rewinding mechanism, driving means therefor, means including a pneumatic automatically operable to place said mechanism in sheet feeding condition, sheet controlled means for causing said pneumatic to place said mechanism in sheet rewinding condition, and sheet controlled latch means for releasably retaining said pneumatic and consequently said mechanism in sheet rewinding condition.

7. In a sheet controlled pneumatic player, the combination of sheet feeding and rewinding mechanism, driving means therefor, control means for selectively rendering said driving means active and inactive, means including a pneumatic automatically operable to place said mechanism in sheet feeding condition, sheet controlled means for causing said pneumatic to place said mechanism in sheet rewinding condition, means for releasably retaining said pneumatic, and consequently said mechanism, in sheet rewinding condition, and means cooperating with said control means and said retaining means for rendering said driving means active and for simultaneously releasing said pneumatic to place said mechanism in sheet feeding condition.

8. In a sheet controlled pneumatic player, the combination of sheet feeding and rewinding mechanism, driving means therefor, means including a pneumatic for controlling said driving means, means including a second pneumatic for controlling said winding mechanism, resilient means tending to force said second pneumatic into position to place said winding mechanism in sheet feeding

condition, sheet controlled means for causing said second pneumatic to assume such position as to place said winding mechanism in rewinding condition, means including a third pneumatc for releasably retaining said second pneumatic in said latter position, and sheet controlled means associated with said third pneumatic for effecting the release of said second pneumatic to place said winding mechanism in sheet feeding condition.

In witness whereof, I hereunto subscribe my name this 22nd day of April, 1922.

FRANK J. CLARK.