PCT

WORLD INTELLECTUAL PROPERTY ORGANIZATION
International Bureau

INTERNATIONAL APPLICATION PUBLISHED UNDER THE PATENT COOPERATION TREATY (PCT)

(51) International Patent Classification 6 : G02B 6/44

A2

(11) International Publication Number: WO 96/19745

(43) International Publication Date: 27 June 1996 (27.06.96)

(21) International Application Number: PCT/SE95/01552

(22) International Filing Date: 20 December 1995 (20.12.95)

(30) Priority Data:
9404447-6 21 December 1994 (21.12.94) SE

(71) Applicant *(for all designated States except US)*: TYKOFLEX AB [SE/SE]; P.O. Box 614, S-135 26 Tyresö (SE).

(72) Inventors; and
(75) Inventors/Applicants *(for US only)*: ÖRJES, Anders [SE/SE]; Svängstigen 23, S-135 00 Tyresö (SE). RIIHIMÄKI, Risto [SE/SE]; Lejonets gata 380, S-136 60 Haninge (SE).

(74) Agents: MODIN, Jan et al.; Axel Ehrners Patentbyrå AB, P.O. Box 10316, S-100 55 Stockholm (SE).

(81) Designated States: AL, AM, AT, AU, BB, BG, BR, BY, CA, CH, CN, CZ, DE, DK, EE, ES, FI, GB, GE, HU, IS, JP, KE, KG, KP, KR, KZ, LK, LR, LS, LT, LU, LV, MD, MG, MK, MN, MW, MX, NO, NZ, PL, PT, RO, RU, SD, SE, SG, SI, SK, TJ, TM, TT, UA, UG, US, UZ, VN, European patent (AT, BE, CH, DE, DK, ES, FR, GB, GR, IE, IT, LU, MC, NL, PT, SE), OAPI patent (BF, BJ, CF, CG, CI, CM, GA, GN, ML, MR, NE, SN, TD, TG), ARIPO patent (KE, LS, MW, SD, SZ, UG).

Published
Without international search report and to be republished upon receipt of that report.

(54) Title: MAGAZINE AND CASSETTE FOR STORAGE OF OPTICAL FIBRES

(57) Abstract

A magazine (1) for orderly storage of excess lengths of optical fibres (5), in particular adjacent to a connection box (3) or the like. The magazine comprises a plurality of compartments (15, 16) each housing a cassette (6). The cassettes (6) are loosely insertable into the compartments (15, 16) of the magazine and are formed as circular disc units, which are radially open all around a central winding drum. Two deflecting guides in the form of fixed spools (7, 8) are freely accessibly located in an adjacent compartment, so that an end loop (5a) of the excess coil can be manually laid around one spool (7) and the adjoining, combined portions (5b, 5c) can be manually wound onto the cassette while forming a number of excess winding coils.

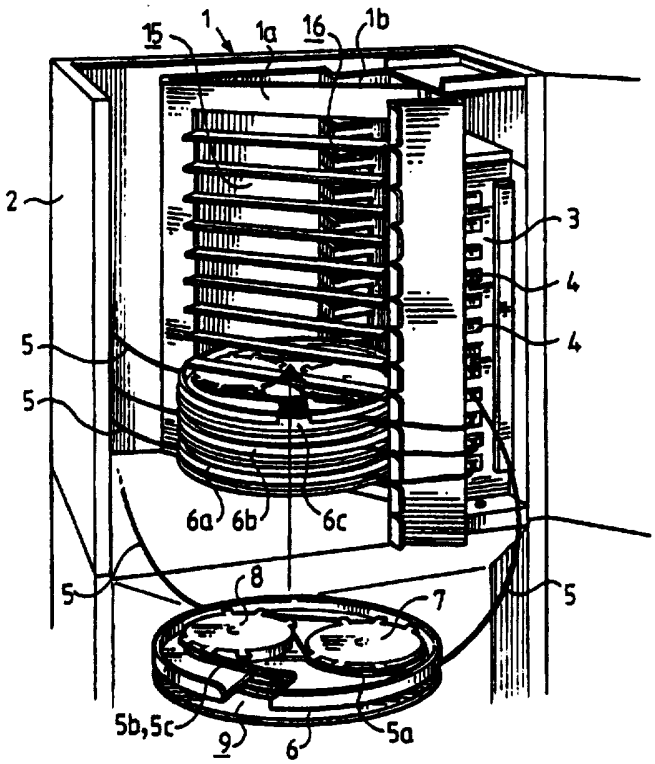

FOR THE PURPOSES OF INFORMATION ONLY

Codes used to identify States party to the PCT on the front pages of pamphlets publishing international applications under the PCT.

AT	Austria	**GB**	United Kingdom	**MR**	Mauritania
AU	Australia	**GE**	Georgia	**MW**	Malawi
BB	Barbados	**GN**	Guinea	**NE**	Niger
BE	Belgium	**GR**	Greece	**NL**	Netherlands
BF	Burkina Faso	**HU**	Hungary	**NO**	Norway
BG	Bulgaria	**IE**	Ireland	**NZ**	New Zealand
BJ	Benin	**IT**	Italy	**PL**	Poland
BR	Brazil	**JP**	Japan	**PT**	Portugal
BY	Belarus	**KE**	Kenya	**RO**	Romania
CA	Canada	**KG**	Kyrgystan	**RU**	Russian Federation
CF	Central African Republic	**KP**	Democratic People's Republic of Korea	**SD**	Sudan
CG	Congo			**SE**	Sweden
CH	Switzerland	**KR**	Republic of Korea	**SI**	Slovenia
CI	Côte d'Ivoire	**KZ**	Kazakhstan	**SK**	Slovakia
CM	Cameroon	**LI**	Liechtenstein	**SN**	Senegal
CN	China	**LK**	Sri Lanka	**TD**	Chad
CS	Czechoslovakia	**LU**	Luxembourg	**TG**	Togo
CZ	Czech Republic	**LV**	Latvia	**TJ**	Tajikistan
DE	Germany	**MC**	Monaco	**TT**	Trinidad and Tobago
DK	Denmark	**MD**	Republic of Moldova	**UA**	Ukraine
ES	Spain	**MG**	Madagascar	**US**	United States of America
FI	Finland	**ML**	Mali	**UZ**	Uzbekistan
FR	France	**MN**	Mongolia	**VN**	Viet Nam
GA	Gabon				

MAGAZINE AND CASSETTE FOR STORAGE OF OPTICAL FIBRES

The invention relates to a magazine for the storage of excess lengths of optical fibres, in particular adjacent to a connection box or the like, said magazine comprising a plurality of compartments, each housing a cassette. On the cassette, there is wound at least one continuous optical fibre coil with an end loop, the curvature radius of which exceeds a predetermined minimum curvature radius, and mutually combined forward and return portions disposed in a number of excess winding coils, the curvature radius of which likewise exceeds said minimum curvature radius. Furthermore, the cassette comprises two deflecting guides, one of which receiving said end loop and the other of which deflecting the adjoining forward and return portions.

The invention also concerns a separate cassette for use in a magazine of the kind mentioned above.

Previously known magazines of a similar kind are disclosed in the US patent specifications 4,792,203 (ADC Telecommunications, Inc.), 5,013,121 (Anton et al) and 5,069,523 (Siemens AG). In the magazines according to US 4,792,203 and US 5,069,523, the cassettes are provided with special splice areas, where two separate fibre ends are spliced and mutually joined to each other. However, in US 5,013,121, like the present invention, it is a question of storing a continuous optical fibre coil in an orderly, well-defined way without having access to the end points of the optical fibre coil, wherein an end loop (without any joint) is laid round a first guide and the adjoining forward and return portions are laid around a second guide so as to merge with a desired number of excess winding coils. At the previously known device, the end loop is disposed in a central portion of a rotary cassette spool, whereas the excess winding coils are arranged in a peripheral part of the cassette spool surrounding the central portion. The cassette spools are rotatably mounted in the cassettes, which are integrally secured to the magazine. The magazine structure are relatively

complicated, and it is time consuming and cumbersome to dispose the optical fibre excess lengths because the end loop must first be inserted into a slot opening having a complicated configuration, whereupon the winding takes place by rotating the spool while guiding the optical fibre length through a small opening in the cassette.

Against this background, the object of the present invention is to provide a less complicated magazine enabling a convenient and quick storage of excess lengths of optical fibres.

This object is achieved, according to the invention, by a magazine and an associated cassette having the features stated in the claims 1 and 4, respectively. Suitable further features are stated in the dependent claims 2, 3 and 5-10.

Thus, the cassettes are loosely insertable into the magazine compartments and are formed as circular disc units being radially open all around a central winding drum, like a winding spool, and the deflecting guides are freely accessibly located at an axial distance from the winding drum. Hereby, the end loop can be conveniently disposed onto one of the guides, and the mutually combined portions can be wound onto the cassette while forming a plurality of excess winding coils.

The structure of the magazine can be very simple with fixed compartments for loose insertion of the circular disc cassettes. Moreover, the handling is very simple and convenient since a particular cassette can be taken out from the magazine and be held freely in the hand when arranging the end loop and winding the optical fibre coils.

Owing to the fact that the two deflecting guides are located at an axial distance from the winding drum, the external dimensions of the cassette can be minimized. Preferably, the two deflecting guides are constituted by two fixed spools located diametrically on opposite sides of the center of the cassette and situated in an upper compartment, whereas the

winding drum is situated in a lower compartment. In such an embodiment, the diameter of the cassette may have a magnitude, which exceeds the double diameter of the fixed spools with only a small amount. Preferably, the spools have a diameter which is twice the predetermined minimum curvature radius of the optical fibres.

The invention will be explained further below with reference to the appended drawing illustrating a preferred embodiment.

Figure 1 shows in a perspective view a magazine for optical fibres according to the invention;

Figure 2 shows, in a top view, a cassette incorporated in the magazine according to figure 1; and

Figure 3 is a central section through the cassette.

The magazine according to the invention illustrated schematically in figure 1 is generally denoted with the reference numeral 1. The magazine is disposed in a sheet metal cabinet 2, which is mounted on a non-illustrated rack in a telephone station along with other, similar cabinets. A non-illustrated optical fibre cable with a plurality of optical fibres is permanently connected, at one end thereof, to a terminal box 3 which is standing upright in the cabinet 2 with a plurality of connection outputs 4 being accessible at the front. The front wall of the terminal box 3, including the connection outputs 4, can be drawn out to enable the connection of a connecting cable, cleaning, supervision or the like.

It is assumed that a number of fibre optical connection cables, being connected to other optical fibre cables, coupling apparatus or the like in the telephone station, are inserted into another part of the connection cabinet, in particular to the left in figure 1 and forming excess lengths of one or a couple of meters. Such excess lengths are necessary to make the connection cables accessible and to enable connection thereof.

In figure 1, these connection cables are denoted reference numeral 5.

Upon making a connection cable accessible, the free end thereof is connected to one of the connection outputs 4 of the terminal box 3, wherein in general an excess length of a couple of meters, possibly up to about 10 m, will be present. In figure 1, three such excess lengths have been wound onto cassettes 6a, 6b, 6c, being inserted into the magazine 1, and a fourth excess length is partially wound onto a fourth cassette 6. The excess length of the optical fibre 5 is first brought together into two adjoining portions ending in an end loop 5a, This end loop 5a is laid around an upper fixed spool 7 on the cassette 6, and the adjoining portions 5b, 5c, which have been brought close together, are laid around a second fixed spool 8 on the cassette 6, whereupon these adjoining portions 5b, 5c are brought down through a passage slot 9, being open radially outwardly, in a partition wall 10 between an upper compartment 11 with the fixed spools 7, 8, and a lower compartment 12 with a central winding drum 13 (compare figure 3). The portions 5b, 5c lying close together are wound together in the lower compartment 12 around the winding drum 13 until substantially all of the excess length has been wound onto the cassette 6. When this is done, the cassette 6 is inserted into the associated compartment in the magazine 1, as shown for the cassettes 6a, 6b and 6c.

It appears from the drawing figures that the cassette 6, which is preferably made of a plastic material, has a substantially circular partition wall 10, which separates the upper compartment 11 from the lower compartment 12 and which, at the circumference, merges with an upwardly extending edge flange 10a having the same height as the fixed spools 7 and 8. The latter are located diametrically next to each other at some mutual distance enabling a convenient insertion of the return portion 5c adjoining the end loop 5a. Each spool 7, 8 has radially outwardly extending upper tongues 7a and 8a, respectively, which facilitate the positioning of the end loop 5a and

the adjoining portions 5b, 5c around the fixed spool 8.

Each spool 7, 8 has a radius, which approximately corresponds to a predetermined minimum radius or curvature of the optical fibre. If this minimum radius of curvature is not observed, there is a risk that the light transmission through the fibre will be affected in a negative way with an accompanying disturbance of the transfer of information through the fibre.

Consequently, the diameter of the cassette 6 must somewhat exceed four times said minimum radius of curvature, and it is preferably 2.2 to 2.5 times the diameter of each spool 7, 8.

At the bottom, the cassette 6 has a circular bottom wall 14 having substantially the same diameter as the circular partition wall 10. Hereby, a winding space is formed in the lower compartment 12 radially outside the winding drum 13. Preferably, the latter has a diameter which substantially corresponds to twice said minimum radius of curvature. In the illustrated example, the winding drum 13 consists of a cylindrical wall holding the circular partition wall 10 and the circular bottom wall 14 together. The passage slot 9 in the partition wall 10 is substantially rectangular and preferably extends from the region of the cylindrical wall of the winding drum 13 and radially outwardly all the way to the edge flange 10a, so that this edge flange 10a is interrupted in the region of the passage slot 9 and enables a convenient insertion of the adjoining optical fibre portions 5b, 5c radially inwardly so as to form a smooth transition to the winding coils around the winding drum 13. For this purpose, the passage slot 9 has preferably rounded inner corners 9a, 9b (see figure 2). Moreover, the passage slot 9 is located in the region of a diametrical line through the gap between the two fixed spools 7, 8.

The cassette 6 can be modified by those skilled in the art within the scope of the invention. For example, the fixed spools 7, 8 may be replaced by other guides for retaining the

end loop 5a and the portion 5b, 5c in a well-defined configuration, wherein the radius of curvature does not fall below the predetermined minimum radius of curvature at any point. Such guides may be constituted by separate guiding pins, preferably provided with retaining tongues corresponding to the tongues 7a, 8a and, furthermore, it is possible in principle to dispose the guides 7, 8 in different planes, possibly in such a way that the forward and return optical fibre portions 5b, 5c extend along a helical path into the lower winding compartment of the cassette.

Since the cassettes 6 are formed as circular discs, the different compartments of the magazine 1 may be very simple. In the illustrated example according to figure 1, each compartment is constituted by an elongated slot 15 in a front wall 1a and a short slot 16 in a rear wall portion 1b. The forward slot 15 is somewhat longer than the largest diameter of the cassette 6, whereas the rear slot 1b is substantially shorter, so that a well-defined abutment is provided when a cassette 6 is inserted into the associated slots 15, 16. In this way, the cassettes 6 will be stored in a straight, vertical pile, as appears from figure 1, wherein each optical fibre 5 extends substantially horizontally in a smooth arcuate configuration between the associated contact output 4 and the particular cassette 6.

CLAIMS

1. A magazine for orderly storage of excess lengths of optical fibres (5), said magazine comprising a plurality of compartments (15, 16), each housing a cassette (6), on which there is wound at least one continuous optical fibre coil with an end loop, the curvature radius of which exceeds a pre-determined minimum curvature radius, and mutually combined forward and return portions (5b, 5c) disposed in a number of excess winding coils, the curvature radius of which likewise exceeds said minimum curvature radius, the cassette comprising two deflecting guides (7, 8), one of which receiving said end loop (5a) and the other one of which deflecting the adjoining forward and return portions (5b, 5c), so that the latter are brought together and merge with said excess winding coils, c h a r a c t e r i z e d i n that said cassettes (6) are loosely insertable into said magazine compartments (15, 16) and are formed as circular disc units, which are radially open all around a central winding drum (13), wherein said two deflecting guides (7, 8) are freely accessibly located at an axial distance from the winding drum (13), whereby said end loop (5a) can be laid around said one guide (7) and said mutually combined portions (5b, 5c) can be manually wound onto the cassette while forming said excess winding coils.

2. A magazine (1) as defined in claim 1, disposed adjacent to a connection box (3) having a plurality of connection means (4) for connection of said optical fibre coil (5) to an associated connection means, c h a r a c t e r i z e d i n that

- the connection means of the connection box (3) are arranged in a vertical row,
- the compartments (15, 16) of the magazine are disposed at the side adjacent to the connection box (3), so that each compartment (15, 16) is located at the same level as a connection means (4), and
- each compartment (15, 16) has a wide front slot opening (15) which enables the insertion of the associated cassette

(6) with an excess length of the associated optical fibre coil (5) wound thereon, so that the optical fibre coil (5) extends substantially horizontally in a smooth arcuate configuration between the associated connection means (4) and the cassette (6) inserted into the compartment.

3. A magazine as defined in claim 2, c h a r a c t e - r i z e d i n that said wide front slot opening (15) has a length somewhat exceeding the largest diameter of the cassette (6).

4. A cassette for use in a magazine as defined in claim 1, c h a r a c t e r i z e d i n that said two deflecting guides (7, 8) are disposed in an upper compartment (11) in the cassette, whereas said winding drum (13) is disposed in a lower compartment separated by a fixed partition wall (10) and in that said partition wall has a passage slot (9), being open radially outwardly, for the passage of said combined portions (5b, 5c) from said second guide (8) in the upper compartment (11) to the lower compartment (13), where said winding drum (13) is located.

5. A cassette as defined in claim 4, c h a r a c t e - r i z e d i n that the cassette (6) essentially consists of a circular bottom wall (14) and said, likewise circular partition wall (10), said circular walls having the same external diameter and being held together by said winding drum (13), and in that said passage slot (9) extends from the periphery (10a) of said partition wall radially inwardly to the winding drum.

6. A cassette as defined in claim 4, c h a r a c t e - r i z e d i n that said partition wall (10) has a peripheral flange (10a) on the same side as said two guides (7, 8) for defining said upper compartment (11), said peripheral flange extending all around the circumference except for the region of said passage slot (9).

7. A cassette as defined in claim 4, c h a r a c t e -

r i z e d i n that said two guides essentially consist of two fixed spools (7, 8) located diametrically on each side of the center of the cassette, the radius of each spool exceeding said minimum radius of curvature and said spools forming externally a gap to said peripheral flange 10a and forming internally therebetween a central gap, said gaps being dimensioned to enable a manual insertion of said end loop (5a) and the adjoining, combined portions (5b, 5c) of the optical fibre coil.

8. A cassette as defined in claim 7, c h a r a c t e - r i z e d i n that said passage slot (9) is located in the region of a diametrical line through said gap between the two fixed spools (7, 8).

9. A cassette as defined in claim 8, c h a r a c t e - r i z e d i n that said passage slot (9) is substantially rectangular.

10. A cassette as defined in claim 9, c h a r a c t e - r i z e d i n that the internal short side of the passage slot (9) has rounded corners (9a, 9b) at the transition to each longer side, so that the combined optical fibre portions (5b, 5c) will engage smoothly with such a rounded corner at the transition to the lower compartment (12).

Fig.1

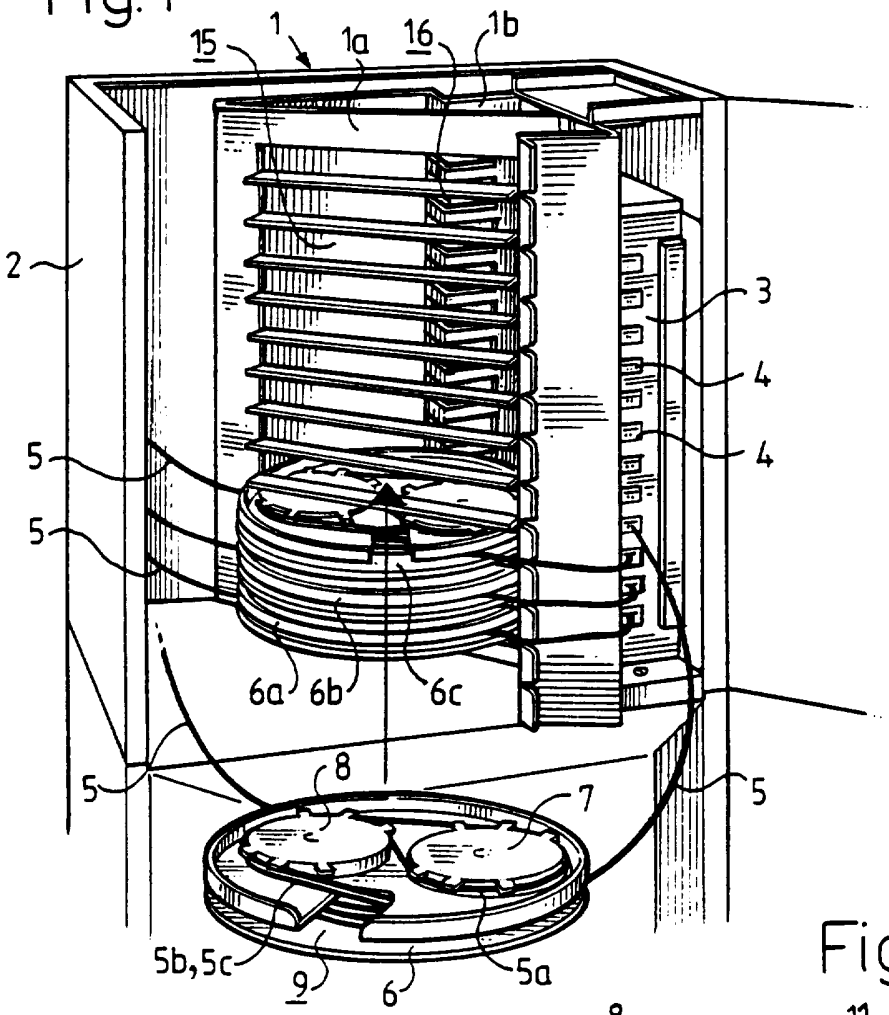

Fig.3

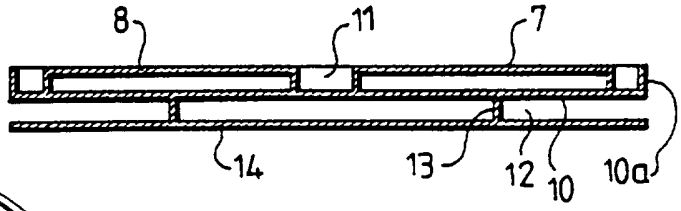
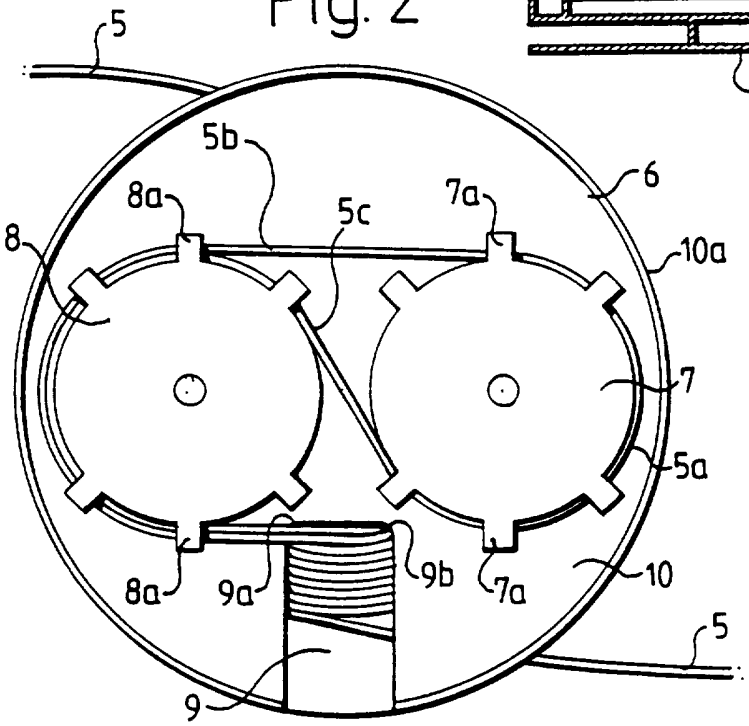
Fig. 2