May 19, 1942. W. P. HERMAN 2,283,807

ELECTRICAL PLUG AND CONTACTOR THEREFOR

Filed Oct. 11, 1939

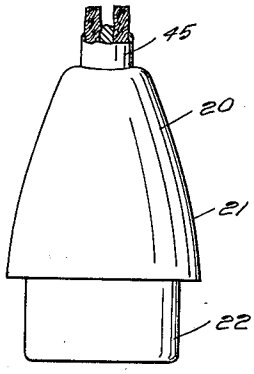


Fig. 1

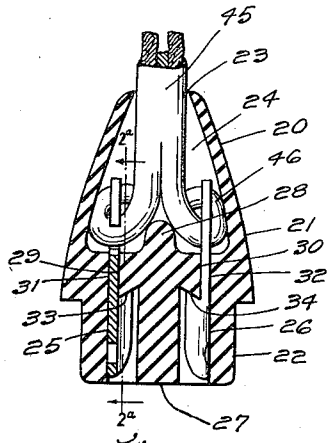


Fig. 2

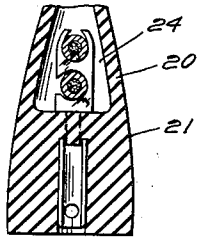


Fig. 2a

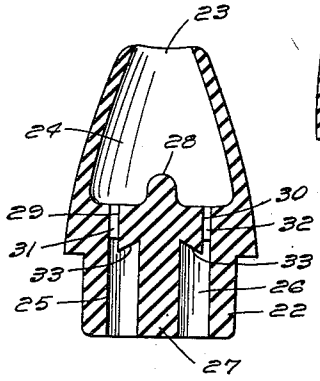


Fig. 3

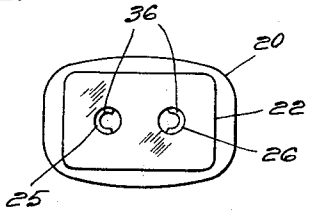


Fig. 4

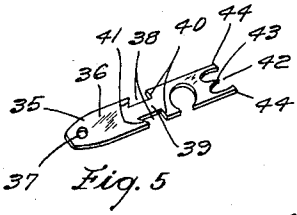


Fig. 5

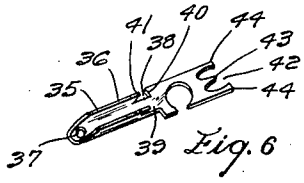


Fig. 6

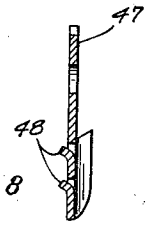


Fig. 8

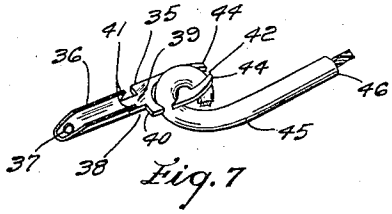


Fig. 7

INVENTOR
Wm. P. Herman
BY
Nathaniel Frucht
ATTORNEY

Patented May 19, 1942 2,283,807

# UNITED STATES PATENT OFFICE

2,283,807

## ELECTRICAL PLUG AND CONTACTOR THEREFOR

William P. Herman, Providence, R. I.

Application October 11, 1939, Serial No. 298,908

4 Claims. (Cl. 173—332)

My present invention relates to the manufacture of a one-piece connector element, and has particular reference to a novel construction of female type connector, a novel contactor therefor, and a novel method of assembly of the same.

The principal object of the present invention is to provide a female type connector in which the connector body is made of an integral, one-piece body of resilient material such as soft rubber.

Another important object of the invention is to provide an improved contact blade, for use in plug bodies, which is simple and efficient in design, readily and inexpensively manufactured and which lends itself to the fulfillment of certain objectives of efficient and economical assembly and durability, longevity and effectiveness of operation, such, for instance, as are suggested by the following objects.

It is an additional object of my invention to provide a female type connector in which the various parts of the connector are anchored together without the use of screws, bolts, or other outside anchoring means.

Another object of my invention is to provide a resilient and flexible female connector adapted to cooperate with various sizes of male connectors.

A further object of my invention is to provide a female connector which will withstand the bending, twisting, pulling, and other abuse to which it is put without danger of short circuiting or breaking of the connection. The use of a resilient material such as soft rubber will render the connector body unbreakable so that it will not fracture, shatter, separate or come apart in use, and cause short circuiting.

Another object of my invention is to provide a female connector of the type above specified which can be made in miniature form for use on electrical appliances such as electric razors and the like, using protruding pin terminals.

A further object of my invention is to provide a construction which will take up the strain on the cord lead connection in accordance with the requirements of the Underwriter's Laboratory.

Another object of my invention is to provide a female type connector which can be easily and economically assembled by machine.

With the above and other objects and advantageous features in view, my invention consists of a novel arrangement of parts and a novel method of manufacture and assembly, more fully disclosed in the detailed description following, in conjunction with the accompanying drawing, and more specifically defined in the claims appended thereto.

In the drawing:

Fig. 1 is a front elevation of a female connector embodying my invention;

Fig. 2 is a vertical section of the same;

Fig. 2*a* is a section taken along line 2*a*—2*a* on Fig. 2;

Fig. 3 is a view similar to Fig. 2, the cord and blade assembly being removed;

Fig. 4 is a bottom plan view of the female connector;

Fig. 5 is a perspective view of the blade blank;

Fig. 6 is a similar view of the finished blade;

Fig. 7 is a perspective view of the blade and cord assembly; and

Fig. 8 is a perspective view of a modified form of blade.

Electrical appliances such as washing machines, drink mixers, percolators, toasters, electric razors, fractional H. P. motors, adding machines, and the like, are normally provided with spaced protruding pin terminals and it is necessary to provide a cord lead wire with a female type connector having imbedded therein two contact blades in flat or tubular form which will readily receive the protruding pin terminals on the appliance.

The female connector of the present invention is easy and economical to manufacture and assemble, it can be readily molded from resilient rubber so that it will not chip or break and will be pliable when used, and it can be made of one integral piece requiring no screws or clamping to hold together. The cord lead wire and the contact blades are externally assembled and firmly held in place by predetermined, molded, landings in the connector body.

Referring to the drawing illustrating my invention, the female connector **20** comprises an upper main body portion **21** and an integral depending rectangular contact portion **22** which is adapted to fit into the receptacle on the electrical appliance. The connector **20** is preferably of resilient soft rubber in a one-piece, integral construction. Although the resiliency of the rubber may be varied to suit different requirements, I prefer to use a resilient soft rubber having a durometer reading of between 60 to 65 as the most ideal resiliency for this purpose. The upper main body portion **21** is preferably conical in shape and tapers towards a central cable opening **23**.

The central cable opening **23** opens into an up-

per cable receiving chamber 24 which forms a hollow chamber conforming in contour to the exterior conical formation of the body portion 21. Communicating with the chamber 24 are two spaced parallel slots 25 and 26 extending downwardly through the connector. Slots 25 and 26 are preferably of circular cross section and the integral dielectric connector body material 27 between the slots 25 and 26 extends upwardly into the chamber 24 to form a tongue 28 which acts as a baffle in the chamber. While any suitable anchoring means may be used, I prefer to use an interlocking type which will permit the permanent locking of the blades and cord in the connector without distortion. To this end, I provide each slot 25 and 26 with integral landings 29 and 30 forming restricted rectangular slot passageway portions 31 and 32 at the upper end of each slot, communicating with the chamber 24. The landings 29 and 30 are integral with the central baffle portion 27 and extend outwardly therefrom, the upper edge of each landing 29 and 30 is flush with the lower wall of the chamber 24 and the lower edge of each landing 29 and 30 is undercut, as at 33 and 34 to form an acute angle with the side walls of the slots

While modifications of the type of contact may be resorted to, I prefer to use the type hereinafter to be described in which the blade is anchored permanently within the connector body by the interlocking of the slots and blades without the necessity for distorting the plug body. The blade 35, illustrated in Figs. 5 to 7 inclusive, is preferably stamped from sheet stock. The lower end of the blade, which forms the contact portion 36, is slightly tapered and is provided with an opening 37 for assembly purposes. The intermediate portion of the blade 35 is cut out on both sides, as at 38, to form a central, integral, narrow portion 39 with upper shoulders 40 at right angles to the center portion, and lower shoulders 41 forming an acute angle therewith.

The upper end of the blade is designed to be effectively secured to an electrical conductor without the necessity of soldering. This is particularly important where tinsel cord is used inasmuch as it is a virtual impossibility to solder tinsel cord due to the oxidation of the cord. The upper end of the blade therefore comprises an intermediate opening 42 open at one side and of sufficient diameter to receive a cord lead wire without removing the insulation. The upper end of the blade is provided with an integral central upstanding prong 43 and side lugs 44 extending upwardly slightly above the tip of the prong 43 and tapering slightly inwardly as shown in Fig. 6.

The blade is first stamped from flat stock in the form shown in Fig. 5 and the lower portion 36 thereof is then bent into an open tubular shape, the metal forming from 40 to 75%, and preferably 66⅔% of the circumference of the tube and providing a 66⅔% contacting area. This percentage may be varied according to the load for which the connector is adapted to be used. By making the lower contact portion 36 of only ⅔ the contact area with open sides, it is possible to insert pin terminals of slightly larger diameter than that of the original blade inasmuch as the contact portion 36 will then spread slightly to accommodate the larger pin. Inasmuch as there is a leeway of between 40 to 75% of the contact area which is all that is necessary to carry the normal load, it is obvious that if a slightly larger pin terminal is put in the drop from 66⅔ to a lower percentage should not fall below the 40% minimum.

In attaching the ends of the cord lead connection to the contact blade 35, it is merely necessary to either manually or by machine impale the ends of the cord lead wire 45 on the prong 43 without removing the insulation so that the prong pierces the insulation 46 and makes electrical contact with the copper conductor. The side lugs 44 are then pinched together and grip the cord lead wire 45 and lock it over the prong 43. The wire 45 is then reentrantly bent and looped through the opening 42 to provide strain relief which will take up the pull on the cord and prevent it from breaking the electrical contact. With this construction the strain is taken up by the insulation in addition to the copper conductor whereas if the wire is bared the strain must be borne by the copper conductor alone.

When the lower contact portion 36 of the blade is tubularly shaped, the lower shoulder portions 41 provide an arcuate shoulder angularly disposed with the plane of the body of the blade. In assembly, one of the blades must be turned so that these shoulders will face in opposite directions. While any method of assembly may be used, I prefer to use the machine and method disclosed in my copending application Serial No. 99,848, entitled "Contact plug assembly apparatus," filed September 8, 1936 issued as Patent 2,198,966 on Apr. 30, 1940. The central cable opening 23 is distended and the blades 35 and cord 45 are pulled into the connector body 21 so that the arcuate lower contact portion 36 will lie within the slots 25 and 26, the narrow portion 39 of the blade will lie within the restricted slot portions 31 and 32, and the lower shoulders 41 will fit under the undercut portions 33 and 34 in the connector body and anchor under the landings, while the upper portion will abut the landings flush with the lower wall of the cable recess and lock the blade in place. The length of the blades is such that the lower ends thereof will be from $\frac{1}{16}$ to $\frac{1}{32}$ of an inch from the end of slots 25 and 26. The distended cable opening 23 is now released and the connector body resumes its normal position. The narrow portion 39 in the blade forms a weak spot which, while strong enough to resist any breaking, will allow the upper portion of the blade to twist and bend in conformity with the conical shape of the connector body in the cramped space provided by the chamber 24 filled with the blade and the end of the cord lead wire.

While the natural elasticity of the connector body may be used to retain the cord lead wire and blade in place, it is preferred that the parts be so formed that the blade and cord lead wire will fit snugly into place without distorting the connector body, the blades being anchored in place by the cutouts and cooperating landings.

In the modification shown in Fig. 8, the blade 47 is provided with integral struck up lugs 48 designed to retain the blade within the slot. With this form of blade, the slot landings and restricted slot passageway may be eliminated and the lugs used to grip the walls of the slot either by distortion of the connector body or by recesses in the slot walls adapted to receive the lugs.

The heretofore described female connector may be made in any desirable size, in any desirable shape, and may be readily adapted for use with flat type pin terminals by providing a lower contact portion to the blade of generally rectangular cross section and providing flat slot

passageways instead of the annular slots. It can readily be used for 3, 4, or any plurality of contact terminals. The above described construction provides a female connector which is of one piece, which does not require screws or other anchoring means for holding the cord lead wire in electrical contact with the blade or for holding the blade and cord lead wire in the connector body, and which is easy and economical to manufacture and assemble.

While I have described a specific constructional embodiment of my invention, and a specific method of assembly thereof, it is obvious that these are merely illustrative, and that changes in the size and shape of the parts, in their relative arrangement, and in the method of assembly, may be made to suit requirements for different female connector designs, without departing from the spirit and the scope of the invention as defined in the appended claims.

I claim:

1. A female connector plug comprising an integral one-piece body of resilient material having a lower contact portion and an integral upper cord receiving portion having a cable recess, said contact portion having a pair of spaced parallel slots extending downwardly from the cable recess through the connector plug, the contacting area of each slot being of annular cross-section, one wall of each slot extending laterally into the slot at the upper end thereof to form a straight flat restricted slot portion communicating said annular contacting portion and said cable recess, said laterally extending portion being angularly undercut to form an acute-angled shoulder at the upper end of the contacting area of each slot, a female contact blade within each slot having a lower annular contacting portion disposed in the contacting area of its slot and a flat upper end extending through the restricted slot portion into said cable recess, said contacting portion having an acute-angled shoulder at its upper end cooperating with the slot shoulder to lock the blade in the slot against upward pull, and an electrical conductor cable extending into said recess and having cord lead wires in electrical contact with the upper ends of said blades.

2. A female connector plug comprising an integral one-piece body of resilient material having a base and an upper cable recess, said base having a plurality of spaced slots extending downwardly therethrough, the lower contacting portion of each slot being of tubular cross-section, a female contact blade within each slot having its upper end extending into said cable recess, the lower contacting portion of each blade being arcuate to conform to the curvature of its slot and covering between 40% and 75% of the inner surface of the slot, each blade having a lateral slot below the upper end thereof, an electrical conductor cable extending into said recess and having cord lead wires in electrical contact with the upper ends of said blades, and means for locking the upper ends of said wires to said blades, said wires being reentrantly bent through the lateral slots on said blades for relieving the strain on the electrical connection.

3. A female connector plug comprising an integral one-piece body of resilient material having a base and an upper cable recess, said base having a plurality of spaced slots extending downwardly therethrough, a female contact blade within each slot having its upper end extending into said cable recess, each of said blades having a lateral slot below the upper end thereof, an electrical cable extending into said recess and having insulated cord lead wires for contacting the upper ends of said blades, and means integral with the upper end of each blade for making electrical contact with a cord lead wire and for locking the wire to said blade, said means including a central prong extending from the upper end of each blade and adapted to pierce the insulation of the cord lead wire and spaced lugs extending from the upper end of the blade on each side of said prong and adapted to be bent toward each other to lock the cord on the prong, said insulated cord being reentrantly bent through said lateral blade slot to relieve the strain on the contact.

4. A contact blade for a female connector plug comprising a lower tubular contacting portion and an integral straight flat rectangular upper cord receiving portion, the upper end of said contacting portion forming shoulders angularly disposed to the plane of the blade, the lower edge of said upper portion being of reduced width to form shoulders in the plane of the blade, said upper portion having integral means for making electrical contact with an insulated cord lead wire and for locking the wire to said blade, said means including a central prong adapted to pierce the insulation of the cord lead wire and spaced lugs adapted to lock the cord on the prong, said prong and lugs being in the plane of the blade and extending upwardly from the upper end thereof, said blade having a slot adapted to receive said insulated cord for strain relief.

WILLIAM P. HERMAN.